The IEEE Latin America and the Caribbean Magazine

noticieero

Volume 29, Number 2, March/April 2016 [100] ISSN 2157-8354
English | Portuguese | Spanish

#100

IEEE Region 9 Regional Meeting 2016

Call for participations: 2016 IEEE VOLT

IEEE in 2030 challenge

2016 Awards and Recognitions

New IEEE R9 Seniors Members!

IEEE
Advancing Technology for Humanity

noticieeero
The IEEE Latin America and the Caribbean Magazine
#100
Volume 29, Number 2, March/April 2016 [100] ISSN 2157-8354

Editor-in-Chief | Editor en Jefe
Diana Vera S. (Ecuador)
diana.vera@ieee.org

IEEE Region 9 Executive Committee | Comité Ejecutivo de la Región 9 del IEEE
Regional Director | Director Regional
Antonio Ferreira (Rio de Janeiro)
antonio.ferreira@ieee.org
Director-Elect | Director Electo
Teófilo Ramos (Monterrey)
t.ramos@ieee.org
Past Director | Director Pasado
Norberto Lerendegui (Argentina)
nlerendegui@ieee.org
Regional Secretary | Secretario Regional
Augusto Herrera (Argentina)
augustojh@ieee.org
Regional Treasurer | Tesorero Regional
Ozeas Santana (Sul Brazil)
ozeas@ieee.org

Regional Committees Chairs | Presidentes de Comités Regionales
Educative Activities | Actividades Educativas
José Antonio Calderón (Aguascalientes)
calderon@ieee.org
Information Management | Gestión de la Información
Fabián Camilo Peña Lozano (Colombia)
fabiancpl@ieee.org
Student Activities | Actividades Estudiantiles
Jimmy Túllume (Perú)
j.tullume@ieee.org
Deborah Bravo (Chile)
deborah.b.d@ieee.org
Technical Activities | Actividades Técnicas
Gerardo Barbosa (Monterrey)
gerardo@ieee.org
E-NoticIEEEro - EiC
Diana Vera (Panamá)
diana.vera@ieee.org
Membership Development | Desarrollo de Membrecía
Teófilo Ramos (Monterrey)
t.ramos@ieee.org
Awards and Recognitions | Premios y Reconocimientos
Tania Quiel (Panamá)
t.quiel@ieee.org
Transactions | Transactions
Mirela Sechi Moretti Annoni Notare (Sul Brazil)
mirela@ieee.org

AdHoc Committees Chairs | Presidentes de Comités AdHoc
Nominations | Nominaciones
Norberto Lerendegui (Argentina)
nlerendegui@ieee.org
History | Historia
Francisco Martínez (Guadalajara)
f.martinez@ieee.org
Young Professionals | Jóvenes Profesionales
Natalia Dultra (Bahia)
natalia.dultra@gmail.com
WIE | WIE
Yul Rodriguez (Colombia)
yandrearp@ieee.org
Strategic Planning | Planeación Estratégica
Teófilo Ramos (Monterrey)
t.ramos@ieee.org
Accreditation Advisory Committee | Comité Asesor de Acreditación
José Antonio Calderón (Aguascalientes)
calderon@ieee.org
Life members | Life members
Carlos Nafarrate Mexía (México)
carlosnafarratem@nafarrate.com
Professional Activities | Actividades Profesionales
Patricia Guzman (Puebla)
pguzman78@hotmail.com
Humanitarian Activities | Actividades Humanitarias
Thelma Rodrigues (Minas Gerais)
thelma@pucminas.br
Region Vitality | Region Vitality
Mario Alemán (Nicaragua)
alemani@ieee.org

NoticIEEEro (ISSN 2157-8354) es una publicación bimestral de la Región 9 del IEEE, América Latina y el Caribe, que se distribuye a toda su membrecía en formato digital y se encuentra disponible para toda la comunidad en www.ieee.org/r9. Los idiomas oficiales de la publicación son inglés, portugués y español (castellano). El contenido de los artículos publicados es responsabilidad de los autores y no compromete al IEEE. Esta obra se publicó en el mes de mayo de 2016.

Citar artículos en esta edición del NoticIEEEro como: "IEEE NoticIEEEro, nombre del artículo, Volume 29, Number 2, March/April 2016 [100], pp-xx".

Copyright Notice: © 2010 IEEE. Personal use of this material is permitted. Permission from IEEE must be obtained for all other uses, including reprinting/republishing this material for advertising or promotional purposes, creating new collective works for resale or redistribution to servers or lists, or reuse of any copyrighted component of this work in other works. Contact NoticIEEEro's Editor-in-Chief. According 8.1.9 Electronic information dissemination, IEEE PSPB Operations Manual, 13 February 2009.

Cover Photo: IEEE R9 Regional Committee, Trinidad & Tobago, IEEE 2016 Regional Meeting.

noticieeero
The IEEE Latin America and the Caribbean Magazine
Volume 29, Number 2, March/April 2016 [100] ISSN 2157-8354
#100

Contents/Contenido/Conteúdo

04 Mensaje del Editor en Jefe

05 IEEE R9 Reunión Regional 2016

09 1966-2016, R9 Latin America 50 Anniversary

10 Premios y reconocimientos regionales

13 New IEEE Senior Members

14 Professional activities

16 Telecommunicaciones engineering: 20 years in Colombia receiving the IEEE support

18 Call for participation: 2016 IEEE VOLT

19 HAC announces its 2016 founding opportunities

20 IEEE Student Activities

24 From my Office Teaching Notes: Emphasizing Four Network Theorems for Resistive Circuits

20 Call for papers:
- LATINCOM
- ARGENCON
- ETCM
- INTERCON

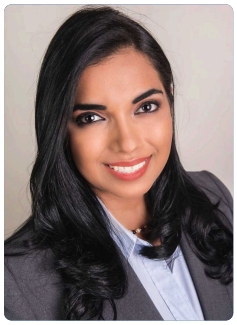

Estamos de aniversario
100 ediciones del NoticIEEEro

Diana Vera S. - Editor-in-Chief
diana.vera@ieee.org

Esta edición es muy especial, estamos celebrando 100 ediciones de la Revista de Latinoamérica

Estimado Lector:

Es un placer dirigirme a usted en esta edición conmemorativa del NoticIEEEro, dado que es la número 100. La revista no sería el éxito que es, si no fuera por el apoyo incondicional de los Directores Regionales, voluntarios y los editores que han mejorado las ediciones en cada publicación. Para mí es un honor contar con esta responsabilidad hoy en día.

2016 es un año de celebraciones, la Región 9 está cumpliendo 50 años. Lo invito a participar de las actividades que se están realizando por este motivo, y así poder ser parte de la historia. En esta edición presentamos información sobre la Reunión Regional 2016 realizada en Trinidad y Tobago.

Al final de la revista se ha incluído una encuesta, que agradecemos responder con el fin de mejorar continuamente la publicación.

No olvide que el NoticIEEEro es la publicación oficial de IEEE Región 9, una ventana abierta para difundir sus actividades y saber qué está sucediendo en la Región. No deje de participar enviando sus artículos.

Editores del NoticIEEEro
1990-1995: Juan Carlos Míguez (Uruguay)
1996: Marcel Keschner (Uruguay)
1997: Marcelo Mota (Brasil)
1998-1999: Francisco Martínez (Guadalajara)
2000: Rafael Ávalos (Guadalajara)
2001: Jorge Him (Panamá)
2002-2004: Luis Alberto Arenas (Colombia)
2005-2007: Pablo Fernando Sanchez (Colombia)
2008: Luis Alberto Arenas (Colombia)
2008-2011: Ignacio Castillo (México)
2011-2012: Pablo Fernando Sanchez (Argentina)
2012:2015: Salomón Herrera (Ecuador)

noticieeero@ieee.org

Mantenga el contacto con el noticieeero en:

noticieeero

IEEE R9 Reunión Regional 2016

"Preparando nuestros líderes para servir mejor a nuestros miembros"

Antonio Ferreira - IEEE R9 – Director Regional 2016-2017
antonio.ferreira@ieee.org

****
Versión Español
****

La Reunión Regional presencial 2016 del IEEE Región 9 (IEEE Region 9 face-to-face Regional Meeting) se celebró en Puerto España, Trinidad y Tobado, del 2 al 5 de Marzo. Esta fue particularmente una reunión muy especial que marcó el comienzo de la celebración del ***50 Aniversario de la Región 9***, así como también la celebración de los ***10 años de la Sección Trinidad y Tobago.***

Al igual que en años anteriores, la Reunión Regional se realizó en conjunto con la ***Reunión Regional de los Grupos de Afinidad de Mujeres en Ingeniería*** (WIE – Women in Engineering) y ***Jóvenes Profesionales (YP – Young Professionals)***, contando con la asistencia de los líderes de la Región 9, Comité Ejecutivo (5), Presidentes de Consejos (4), Presidentes de Sección o sus representantes (30), Presidentes de Comités Regulares y Ad-Hoc (14), Coordinadores WIE (9), Coordinadores YP (7), Invitados Especiales (14), Representantes de Sociedades (1), Delegados No Primarios (3) y Acompañantes (6).

invitados especiales. Tuvimos también el placer de contar con la participación de Karen Bartleson, Presidenta Electa del IEEE, Howard Michel, Presidente Pasado, Ted Hissey, Director Emérito, Lawrence Wong, Vicepresidente del Board de Miembros y Actividades Geográficas (MGA - Member and Geographic Activities Board), Sundaram K. Ramesh, Vicepresidente del Comité de Actividades Educativas (EAB - Educational Activities Board) y John Walz, Director de la Division X, Laura Edelson, Presidenta del Comité de Actividades Humanitarias (HAC - Humanitarian Activities Committee), Antonio Luque, Presidente del Comité de Reclutamiento y Recuperación de Miembros (MRCC - Membership Recruitment and Recovery Committee), Douglas Gorham, ex Director del Board de Actividades Educativas, Keyana Tennant, Coordinadora del programa WIE, Charmain Williams, Coordinadora del producto Recursos Globales de Carrera (Global Career Resources), y Marguerite Gargiula, Coordinadora del MGA – Gestión de Información (MGA - Information Management), quienes, además de hacer su presentación sobre sus respectivos Comités, fueron capaces de interactuar con los voluntarios de la Región durante toda la reunión.

Marcelo Lerendegui durante su ponencia.

Laura Edelson, Presidenta del Comité de Actividades Humanitarias (HAC - Humanitarian Activities Committee)

Durante tres días y medio, los voluntarios de la Región 9 tuvieron la oportunidad de aprender, interactuar e intercambiar ideas y experiencias con lo demás voluntarios de la Región, como así también con los

La participación de estos invitados, en conjunto con el trabajo de los presidentes de Comités de la Región 9, dio a los voluntarios la oportunidad de aumentar aún más sus conocimientos en proyectos y programas específicos del IEEE como vTools, Collabratec, Nominación a Senior Member, Acuerdo de la Sociedad Nacional, Recursos de Carrera, Actividades Humanitarias, Desarrollo de Membresía, Vitalidad de la Región, WIE, IEEE-HKN, y una nueva iniciativa en relación a la grabación de reuniones de Capítulos, como así también tener una visión más amplia de los proyectos del MGA y del EAB.

Karen Bartleson y Howard Michel hicieron una presentación sobre los cambios propuestos en la constitución del IEEE, los cuales serán votados por los miembros en las elecciones del año 2016, y la propuesta de optimizar la estructura del Board, un esfuerzo liderado por el Comité Ad-Hoc IEEEin2030.

Los asistentes tuvieron también la oportunidad de escuchar y discutir con Wanda Reder y Jim Jefferies, candidatos a Presidente Electo IEEE para el 2016, quienes expusieron sus puntos de vista sobre como IEEE debe avanzar para seguir para seguir cumpliendo su misión.

Wanda Reder y Jim Jefferies.

En la reunión presencial de presidentes de Consejos y Secciones los asistentes pudieron discutir con los presidentes de Comités Regulares y Ah-Hoc los planes que ya habían sido discutidos en la Reunión Virtual, aprobar mociones que nos ayudarán a mejorar el cumplimiento de nuestras funciones como voluntarios, aprobar a los acreedores de los premios regionales y aprobar el presupuesto 2016. La Ceremonia de Premiación se celebró en la cena de clausura, el sábado 5, a la cual asistieron delegados de la Región 9, invitados especiales, voluntarios del comité organizador local y sus acompañantes.

En el año 2016 nuestro Comité Regional tiene 5 nuevos presidentes de Consejo y 19 nuevos presidentes de Sección, y la reunión Regional fue también una oportunidad para el fortalecimiento de las relaciones y el comienzo de nuevas amistades entre los miembros del Comité Regional.

Cake para la celebración de los 50 años de la Región.

Antonio Ferreira y Karen Bartleson develanto el estandarte conmemorativo de los 50 años de la Región 9.

Asistentes a la ceremonia de inauguración.

Los asistentes disfrutaron de la hospitalidad de los voluntarios de la Sección Trinidad y Tobago, y yo no podía dejar pasar la oportunidad para felicitar y agradecer a todos ellos por el excelente trabajo realizado en la planificación y organización de nuestra reunión Regional 2016. Su bondad y todo el esfuerzo que ellos hicieron para hacernos sentir como en casa fue increíble y mi agradecimiento nunca será suficiente.

Saludos cordiales,

Antonio C. Ferreira, Ph.D.

Director 2016-2017 IEEE Región 9

IEEE Region 9 Regional Meeting 2016

"Preparing our leaders to better serve our members"

****

English version

****

Dear IEEE Region 9 colleagues,
IEEE Region 9 face-to-face Regional Meeting 2016 was held in Port of Spain, Trinidad and Tobago, March 2-5. This was a particularly special meeting that marked the beginning of Region 9 **50th Anniversary** celebration, as well as the celebration of Trinidad and Tobago Section **10th Anniversary**.

As in previous years, the Regional Meeting was held in conjunction with the ***Region-9 Women in Engineering (WIE)*** and ***Young Professionals (formerly GOLD) Meetings***, and was attended by Region 9 leadership, Executive Committee (5), Council Chairs (4), Section Chairs or their representatives (30), Regular and Ad-Hoc Committee Chairs (14), WIE Coordinators (9), Young Professionals Coordinators(7) , Special Guests (14), Society Representative(1), Non-Primary Delegates(3) and Companions(6).

During three and a half days, Region 9 volunteers had the opportunity to learn, interact, and exchange ideas and experiences with each other as well as with the special guests. We were fortunate to have the participation of Karen Bartleson, IEEE President-Elect, Howard Michel, IEEE Past-President, Ted Hissey, Director Emeritus, Lawrence Wong, Vice-President Member and Geographic Activities Board, Sundaram K. Ramesh, Vice-President Educational Activities Board and John Walz, Division X Director, Laura Edelson, Chair of the HumaThe participation of these guests, combined with the work of Region 9 Committee chairs, gave our volunteers the opportunity to further increase their knowledge on specific ongoing IEEE projects and programs, live vTools, Collabratec, Senior Member nomination, National Society Agreement, Career Resources, Humanitarian Activities, Membership Development+Region Vitality, WIE, IEEE-HKN, a new initiative regarding chapter meetings recording as well as having a broader view of the project of MGA and EAB Boards.

Karen Bartleson and Howard Michel made a presentation on the proposed changes in the IEEE constitution, which will be voted by the members in the 2016 election, and the proposed optimized Board structure, effort led by the IEEEin2030 Ad Hoc Committee.

The attendees also had the opportunity to listen and discuss with Wanda Reder and Jim Jefferies, IEEE 2017 President-Elect candidates, their views on how IEEE should move forward to continue fulfilling its mission.

In the face-to-face meeting Council and Section delegates could: discuss with Regional Standing and Ah-Hoc Committees chair the plans that were already posted at the preceding Virtual Meeting, approve motions that will help us better carry out our functions as volunteers, approve the recipients of Region 9 Awards and the 2016 budget. The Award Ceremony was held at the closing dinner, on Saturday 5th, attended by Region 9 delegates, special guests, volunteers of the local organizing committee and companions.

In 2016 our Regional Committee has 5 new Council Chair and 19 new Section Chairs and the Meeting was also an opportunity for strengthening old and starting new friendship among the members of our Regional Committee.

Volunteers of Trinidad & Tobago Section.

The participants enjoyed the hospitality of the Trinidad and Tobago Section and I could not miss the opportunity to congratulate and thank them all for the excellent work carried out in the planning and organization of our Regional Meeting 2016. Their kindness and all the efforts they made to make us feel at home were unbelievable and I will never be able to thank them enough.

Best regards,

Antonio C Ferreira, Ph.D.

IEEE Region 9, Director 2016-2017

IEEE R9 Reunião Regional 2016

"Preparando nossos líderes para servir melhor aos nossos membros"

****
Versão em português
****

A Reunião Regional presencial 2016 da IEEE Região 9 ocorreu em Porto de Espanha, Trinidad e Tobago, do dia 2 ao 5 de Março. Essa foi uma reunião particularmente especial, que marcou o começo da celebração do 50º Aniversário da Região 9, assim como também a comemoração do 10º Aniversário da Seção Trinidad e Tobago.

Assim como nos anos anteriores, a Reunião Regional foi realizada em conjunto com a Reunião Regional dos Grupos de Afinidade Mulheres na Engenharia (WIE – Women in Engineering) e Jovens Profissionais (YP – Young Professionals), contando com a assistência dos líderes da Região 9, Comitê Executivo (5), Presidentes de Conselhos (4), Presidentes de Seção ou seus representantes (30), Presidentes de Comitês Regulares e Ad-Hoc (14), Coordenadores WIE (9), Coordenadores YP (7), Convidados Especiais (14), Representantes de Sociedades (1), Delegados Não-Primários (3) e Acompanhantes (6).

Durante três dias e meio, os voluntarios da Região 9 tiveram a oportunidade de aprender, interagir, e trocar ideias e experiências com os demais voluntarios da Região, assim como também com os convidados especiais. Também tivemos o prazer de contar com a participação de Karen Bartleson, Presidenta Eleita do IEEE, Howard Michel, Presidente Passado, Ted Hissey, Diretor Emérito, Lawrence Wong, Vice-Presidente do Comitê de Membros e Atividades Geográficas (MGA - Member and Geographic Activities Board), Sundaram K. Ramesh, Vice-Presidente do Board de Atividades Educativas (EAB – Educational Activities Board) e John Walz, Diretor da Divisão X, Laura Edelson, Presidenta do Comitê de Atividades Humanitárias (HAC- Humanitarian Activities Committee), Antonio Luque, Presidente do Comitê de Recrutamento e Recuperação de Membros (MRCC – Membership Recruitment and Recovery Committee), Douglas Gorham, ex–Diretor do Board de Atividades Educativas (EAB), Keyana Tennant, Coordenadora do Programa WIE, Chairman Williams, Coordenadora do produto Recursos Globais de Carreira (Global Career Resources), e Marguerite Gargiula, Coordenadora do MGA – Gestão de Informação (MGA – Information Management), os quais, além de fazer suas apresentações sobre seus respectivos Comitês, foram capazes de interagir com os voluntários das Região durante toda a Reunião.

A participação destes convidados, em conjunto com o trabalho dos presidentes de Comitês da Região 9, deu aos voluntários a oportunidade de aumentar ainda mais seus conhecimentos em projetos e programas específicos do IEEE, como vTools, Collabratec, Nominação a Senior Member, Acordo da Sociedade Nacional, Recursos de Carreira, Atividades Humanitárias, Desenvolvimento de Membresia, Vitalidade da Região, WIE, IEEE-HKN, e uma nova iniciativa em relação à gravação de reuniões de Capítulos, assim como também de ter uma visão mais ampla dos projetos do MGA e do EAB.

Karen Bartleson e Howard Michel fizeram uma apresentação sobre as mudanças propostas na constituição do IEEE, as quais serão votadas por membros nas eleições do ano de 2016, e a proposta de otimizar a estrutura do Board, um esforço liderado pelo Comitê Ad-Hoc IEEEin2030. Os participantes também tiveram a oportunidade de escutar e discutir com Wanda Reder e Jim Jefferies, candidatos a Presidente Eleito IEEE para 2016, os quais expuseram seus pontos de vista sobre como o IEEE deve avançar para seguir cumprindo a sua missão.

Na reunião presencial de presidentes de Conselhos e Seções, os participantes puderam discutir com os presidentes dos Comitês Regulares e Ad-Hoc os planos que já haviam sido discutidos na Reunião Virtual, aprovar moções que nos ajudarão a melhorar o cumprimento de nossas funções como voluntários, aprovar os recipientes dos prêmios regionais da Região 9 e aprovar o orçamento 2016. A Cerimônia de Premiação foi comemorada no jantar de encerramento, no sábado 5, do qual participaram delegados da Região 9, convidados especiais, voluntários do comitê organizador local e seus acompanhantes.

No ano de 2016, nosso Comitê Regional tem 5 novos presidentes de Conselho e 19 novos presidentes de Seção, e a Reunião Regional foi também uma oportunidade para o fortalecimento das relações e o início de novas amizades entre os membros do Comitê Regional.

Um abraço,

Antonio C Ferreira, Ph.D.

IEEE Region 9, Diretor 201 6-201 7

1966 – 2016, R9 Latin America 50 Anniversary

Francisco Martínez - IEEE R9 – R9 History Chair
f.martinez@ieee.org

2016 marks a milestone in R9 because we are celebrating 50 years of IEEE in Latin America. We want to celebrate all through the year and highlight this event in many ways. We have started with a video from R9's past Directors, a presentation with the evolution of R9 during these years, and we are planning contests and events to celebrate the 50th anniversary of IEEE in Latin America.

In this article I would like to share with you briefly some facts and dates about IEEE and R9, and invite you all to participate in the different activities and contests we have prepared for this important occasion.

R9 was formed in 1966, but going back in time is important to understand where IEEE comes from.

In the spring of 1884, Thomas Edison, Alexander Graham Bell, and other notables founded the American Institute of Electrical Engineers, or AIEE. In 1912, with focus on the new industries of wireless technologies and electronics, came a new society with an international approach, the Institute of Radio Engineers, or IRE. AIEE and IRE were behind many of history's world-changing technological developments, such as television, radar, satellites, transistors, computers, and others.

On January 1, 1963, AIEE and IRE merged to become the Institute of Electrical and Electronic Engineers, or IEEE. Since then,IEEE has become a world- leading publisher of trustworthy, high-quality technical information, a top organizer of international conferences, a valued provider of educational materials and a recognized developer of widely used international standards.

In 1966, the growth of IEEE's activities in Latin America made IEEE officially recognize a new entity with its own structure, not only geographical but also administrative. Guillermo Andrews from Argentina was appointed as the first Region 9 Director for a two-year term (1966-1967). Mr. Andrews, in conjunction with Francisco Hawley (second R9 Director, 1968-1969), from Mexico, were fundamental in the formation of Region 9.

The same year that R9 was formed, IEEE's President Walter Mac Adam visited seven countries in the Region to contact the existing section volunteers and to promote activities and the formation of more sections.

Throughout this time, IEEE has touched many who live in all the Latin American countries through its programs and services, reaching academics, consultants, government, industry, members, volunteers and the public in general. The participation of IEEE volunteers and members has left a positive footprint, so as an initiative of Director Antonio Ferreira, this year we have launched the R9 history website http://ewh.ieee.org/reg/9/history/. Its purpose is to be a repository and inform about the most outstanding events and personalities in our Region, that in one way or another, have been important to the history of R9.

We hope to gather, with everyone's help, dispersed information among those who have participated in R9's activities. This task requires our commitment to share what each one has lived during these years, and the website is the tool to facilitate doing so, all you have to do is enter and click on the "Add Event" link, and follow the instructions. Let us make R9 history together.

On the other hand, and to celebrate throughout this year our anniversary, we will be launching during the following days a series of events and contests, along with the participation bases and prizes. The events are:

1. Identify and propose a milestone in R9
   http://ieeemilestones.ethw.org/IEEE_Milestones_Program
2. Photo contest
3. Event (technical or social) contest
4. Prize for the entity (section, chapter, AG) that uploads more historic events to our History web repository

Do not forget to meet many of our Past Directors and listen to a message they prepared for the occasion. Short version: https://youtu.be/Ifi6QTP1O00.

A presentation with information about this anniversary and historical data can be found at http://ewh.ieee.org/reg/9/history/wp-content/documents/R9-50-anniversary.pdf.

Lastly, we want all of you to be part of the celebrations by contributing to any of the above-mentionedactivities, and remember, "Together we can write R9's History".

IEEE R9, 50 years of ***Fostering Technological Innovation and Excellence For The Benefit Of Humanity.***

Premios y Reconocimientos Regionales

Tania Quiel - Presidenta del Comité de Premios y Reconocimientos R9
t.quiel@ieee.org

El pasado 5 de marzo de 2016 en el marco de la ceremonia de clausura de la Reunión Regional del IEEE Latinoamérica realizada en la ciudad de Puerto España, Trinidad y Tobago se celebró la entrega de premios y reconocimientos regionales.

Con esta ceremonia se reconoce a aquellos voluntarios y a Secciones que se distinguieron por el desarrollo de las actividades durante el 2015 en función de los objetivos del IEEE en la Región. La ceremonia estuvo dirigida por el Director Regional, Antonio Ferreira, el Presidente de Seccion Trinidad y Tobago, W. Richard Small y la Presidenta del Comité de Premios y Reconocimientos Regional, Tania Quiel.

Premio IEEE Teodore W. Hissey

Reconoce aquerllos miembros y voluntarios cuyo apoyo a las Actividades Estudianties o Comités de Jóvenes Profesionales, ha resultado en un gran impacto en los objetivos educacionales de IEEE.

Ganadores:

- Jimmy Túllume. Por su sobresaliente trabajo con ramas estudiantiles y miembros jóvenes profesionales en la Sección Perú.

- Gustavo Díaz. Por su sobresaliente trabajo con estudiantes y miembros jóvenes profesionales en la Sección Panamá.

Ted Hissey entregando el reconocimiento a Jimmy Túllume. A la derecha Antonio Ferreira, Director IEEE R9.

Premio Voluntario Sobresaliente "Oscar C. Fernández" del IEEE Latinoamérica

Reconoce a los voluntarios IEEE en la región que han contribuido prominentemente en las Secciones de IEEE Latinoamérica. Ganador:

Germán Moya. Por sus continuas contribuciones y compromiso en las actividades de la Sección Costa Rica.

Germán Moya recibiendo el reconocimiento de parte de Lawrence Wong, Vice-President MGAB. A la derecha Antonio Ferreira, Director IEEE R9.

Premio Ingeniero Eminente del IEEE Latinoamérica

Reconoce miembros que pertenezcan a cualquiera de las Secciones que forman la Región Latinoamérica, que contribuyan significativamente a la promoción y ampliación de las disciplinas profesionales que son parte de IEEE.

Ganadores:

- Daniela López De Luise. Por sus destacadas contribuciones a la Inteligencia Computacional en el campo de rezonamiento lingüistico aplicado.

- Ricardo Sánchez-Peña. Por sus destacadas contribuciones en la aplicación de la identificación robusta y control de problemas teóricos y aplicados en mútiples áreas de la ingeniería.

Premio al Servicio Meritorio

Reconoce a los miembros de la Región 9 que a través de sus habilidades técnicas y profesionales han hecho contribuciones sobresalientes y notables al Instituto, sus comunidades, compañeros de profesión y semejantes.

Luis Remez. Por sus contribuciones y servicio voluntario a las actividades de IEEE en Argentina y en la Región Latinoamérica.

Marcelo Doallo, Presidente Sección Argentina recibiendo el reconocimiento de parte de Howard Michel, IEEE Past President, Antonio Ferreira (d).

Premio Regional al Mejor Logro del Año del IEEE Latinoamérica

Este premio reconoce la Sección que ha realizaro una actividad de tal importancia en el año anterior de acuerdo a las reglas de este premio y del Comité Regional. Ganador:

IEEE Sección Panamá. Por la implementación del Programa STAR en Panamá.

Antonio Ferreira, Min Chen, José Correa.

Premio Discrecional del Director Regional

Reconoce contribuciones individuales de los voluntarios a la Región o a las Secciones, a nivel regional e incluso a nivel mundial de IEEE. Ganador:

Jorge Him. Por su notable compromiso y contribuciones como Tesorero para garantizar la salud financiera de la Región, lo que permite un mejor uso de nuestros fondos para el beneficio de los miembros.

Antonio Ferreira entregando el reconocimento a Jorge Him.

Finalizando esta importante noche Antonio Ferreira, Director Regional, entregó un reconocimiento especial a los voluntarios de la Sección Trinidad y Tobago por la excelente hospitalidad y labor realizada para organizar la Reunión Regional del IEEE Latinoamérica 2016.

Antonio Ferreira y voluntarios de la Sección Trinidad y Tobago.

Ganadores de la noche junto a Anotnio Ferreira y Ted Hissey.

Chairs of Councils in Region 9 | Presidentes de Consejos en la Región 9

Andino	José David Celi
Brasil	Walter Issamu Suemitsu
CAPANA	Jaqueline Mejía
Cono Sur	Juan José Encina
México	Francisco Ponce

Chairs of Sections in Region 9 | Presidentes de Secciones en la Región 9

Aguascalientes	Gabriel Suarez
Argentina	Marcelo Doallo
Bahia	Thiago Barbosa
Bolivia	Rudy Guaraz Villegas
Centro Occidente	Juan Carlos Olivares
Centro-Norte	Ricardo Jacobi
Chile	Rodrigo Palma
Colombia	Lorena García
Costa Rica	Raul Sequeira
Ecuador	Carlos Monsalve
El Salvador	Armando Moisa
Guadalajara	Diana Valadez
Guanajuato	Javier Magaña
Guatemala	Herman Juarez
Honduras	Gina Houghton
Mexico	René Trejo Orduña
Minas Gerais	Abilio Variz
Monterrey	Sergio Camacho
Morelos	Julio Hernández
Nicaragua	Mario Aleman
Panama	Jose Correa
Paraguay	Juan Encina Cabrera
Peru	José Durán Talledo
Puebla	Germán Muñoz
Puerto Rico y Caribe	Luis Tatis
Queretaro	Juvenal Rodriguez Resendiz
Rio de Janeiro	Tatiana Mariano Lessa
South Brasil	Guiou Kobayashi
Trinidad y Tobago	Wayne Richard Small
Uruguay	Rafael Sotelo
Venezuela	TBD
Veracruz	Luciano Gonzalez
Western Puerto Rico	Hector Peña

Region 9 IEEE Senior Members Upgraded in February and March 2016

Argentina Section	Fierens Pablo
Argentina Section	Guerra Eduardo
Argentina Section	Leon Andres
Argentina Section	Wolfenson Roberto
Argentina Section	Codagnone Juan
Bahia Section	Oliveira Amauri
Centro Occidente Section	Acosta Ricardo
Costa Rica Section	Orozco Jose
Guatemala Section	Perez Miguel
Mexico Section	Perez-Pinal Francisco
Peru Section	Quijada Ricardo
Puerto Rico &Caribbean Section	Harper Niel
Puerto Rico &Caribbean Section	Payne Rodney
Rio De Janeiro Section	Coelho Rosangela
Rio De Janeiro Section	Motta JrPaulo
Rio De Janeiro Section	Vonderweid Jean-Pierre
South Brazil Section	Rider Marcos
Trinidad And Tobago Section	Boodoo Winston
Veracruz Section	Tinoco Magana Julio
Veracruz Section	Castilla Acosta Karla
Western Puerto Rico Section	Ducoudray Gladys

Benefits of Senior membership

- ***Recognition:*** The professional recognition of your peers for technical and professional excellence.
- ***Senior Member plaque:*** All newly elevated Senior members receive an engraved Senior Member plaque to be proudly displayed for colleagues, clients, and employers to see. The plaque, made of fine wood with bronze engraving, is sent within six to eight weeks after elevation.
- ***US$25 coupon:*** IEEE will recognize all newly elevated Senior members with a coupon worth up to US$25. This coupon can be used to join one new IEEE Society. The coupon expires on 31 December of the year in which it is received.
- ***Letter of commendation:*** A letter of commendation can be sent to your employer on the achievement of Senior Member grade upon the request of the newly elected Senior member.
- ***Announcements:*** Announcement of elevation can be made upon request to your Section/Society in their local newsletters, newspapers, and notices.
- ***Leadership Eligibility:*** Senior members are eligible to hold executive IEEE volunteer positions.
- ***Ability to refer other candidates:*** Senior members can serve as a reference for other applicants for senior membership.
- ***Review panel:*** Senior members are invited to be on the panel to review Senior member applications.
- ***US$25 referral coupon:*** Newly elevated Senior members are encouraged to find the next innovators of tomorrow and invite them to join IEEE. Invite them to join and the new IEEE member will receive US$25 off their first year of membership.

YOU COULD BE THE NEXT IEEE SENIOR MEMBER!

Actividades de marzo en Sección Puerto Rico y Caribe

Luis A. Tatis Morales, BSEE, M.E.M. - Section Chair | IEEE Puerto Rico and Caribbean Section
luistatis@ieee.org

Ceremonia de Reconocimiento a Miembros de la Rama Estudiantil PUPR 2015 -2016

La Ceremonia fue celebrada el pasado jueves 31 de marzo de 2016.Con la presencia de directivos de la Rama Estudiantil IEEE STBR PUPR y Sección Puerto Rico Y Caribe. Se entregaron certificados y se realizó distinción de años como miembros. En la Ceremonia se ofreció temas de crecimiento y desarrollo profesional, beneficios, Juramentación como miembros y claves para ser un buen líder del mañana. Gracias por su participación a los presentes. Lugar: Anfiteatro Arq. Poli, Universidad Politécnica. San Juan, P.R.

Reconocimientos a Ramas Estudiantiles.

Investigadores analizan tecnología y medioambiente en simposio de UNAPEC en R.D. (IEEE Subsección de Puerto Rico y Caribe)

El IV simposio de Investigación Científica UNAPEC 2016 tuvo como objetivo fundamental crear un espacio para la exposición y discusión de temas de investigación en el área de energía y sostenibilidad a nivel nacional e internacional, destacando su importancia en el crecimiento y desarrollo sostenible.

Entre los panelistas estuvo presente el docente universitario Prof. Edgardo V. Oliveros, PhD, de la Interamericana de Bayamón. 'Life Member Chair' Sección Puerto Rico y Caribe.

Simposio de UNAPEC en R.D.

1era reunión de Zona de ramas estudiantiles 2016 IEEE Sección Puerto Rico y Caribe (R9)

Todo un éxito 1era reunión de Zona de ramas estudiantiles 2016 de la Sección Puerto Rico y Caribe – Región 9. UPR recinto Humacao.

Reunión de Zona de Ramas Estudiantiles 2016.

2015 ComSoc-Computer WEBINARS from Latin America

José-Ignacio Castillo Velasquez - ComSoc & Computer Senior Member, Mexico City
icastillo@ieee.org

In 2015, a volunteer's team with Communications and Computer Society members from different countries in Latin America created a "webinar program" intended to cover webinars in Spanish, Portuguese or English for Latin America. The 11 free webinars titles are listed in table 1, where you can find the corresponding link for viewing on demand.

DATE	TOPIC	LECTURERS / Attendants
APRIL - REDES DE DATOS		
Abril 16 20:00 (-5 GMT)	De las ciudades sustentables a las ciudades inteligentes	José Ignacio Castillo Velázquez Computer Society – DVP [75]
ON DEMAND: https://ieeemeetings.webex.com/ieeemeetings/ldr.php?RCID=b8b6d238c6284bd7a6306ffc49474a72		
MAY – COMPUTING NOW & SEGURIDAD		
Mayo 14 17:00 (-5 GMT)	La iniciativa de Computing Now en Español: Difusión de Nuevas Tecnologías TI en Latinoamérica	Osvaldo Pérez [NA]
Mayo 26 20:00 (-5 GMT)	Seguridad cibernética: retos y reflexiones	Manuel Ballester [NA] CISA, CISM, CGEIT, Cobit Trainer
JUNE - REDES DE DATOS		
Junio 25 (-5 GMT)	Las Redes de Internet: Los Servicios de Portadores que Soportan a la Red Internet	Osvaldo Perez [NA]
SEPTEMBER- VIDEO JUEGOS		
Septiembre 10 16:00 (GMT-3)	La problemática transmedia	Douglas Nallar, [20] Coord. y Prof. del programa Game Design, Esc. de Arte Multimedia Da Vinci, Argentina
ON DEMAND: https://youtu.be/DrkMCjenrdM		
Septiembre 17 16:00 (GMT-3)	La necesidad de una sociedad IEEE de Videojuegos	Daniela López De Luise, [28] Nicolás Borromeo
ON DEMAND: https://youtu.be/LPoIu/groKc		
Septiembre 24 16:00 (GMT-3)	Hay ingeniería en los videojuegos?	Daniela López De Luise, [25] Nicolás Borromeo
ON DEMAND:https://ieeemeetings.webex.com/ieeemeetings/ldr.php?RCID=c25c93d47cbc72db47eb10ca8daf799c		
OCTOBER - VIDEO JUEGOS		
Octubre 1	State of the video-games industry	Kate Eduards, [10], Nicolás Borromeo, Andrés Rossi, Martín Romero
ON DEMAND: https://ieeemeetings.webex.com/ieeemeetings/ldr.php?RCID=db410bfa98e16e050e742a0494c36f41		
Octubre 8	La industria de los videojuegos	Cecilia Barat [10] Directora de la Escuela de Game Design de América latina. Game Designer
ON DEMAND:https://ieeemeetings.webex.com/ieeemeetings/ldr.php?RCID=145be4bd0eb45f08a8ca7f2857fdab49		
Jueves Octubre 29	Mejora de procesos de software aplicado a pequeñas organizaciones (Familia ISO/IEC 29110)	Abraham Avila Ramón [15] Computer Society – DVP
2015 DECEMBER		
Diciembre 3	Getting started with meteor	Danilo Páez [26]
ON DEMAND: https://ieeemeetings.webex.com/ieeemeetings/ldr.php?RCID=abc8b4bc656ef7dd136b8fa240a7f45c		

Topics for webinars from Latin America.

I wish to thank all the lecturers and the task force team for their invaluable job contacting lecturers, supporting as moderators, generating flyers, proposing topics, promoting webinars in a variety of media in their countries as liaisons from Communications Society, Computer Society, Young Professionals and RSAC in Latin America. In table 2 are listed the task force team members, in alphabetic order: Augusto Herrera[1] and Agustin Martina[2] (Argentina), Gidy Florez[3] (Brazil), Carlos Lozano[4] and Fabian Peña[5] (Colombia), Mario Aleman[6] (Nicaragua), Jimmy Tullume[7] and Robert Ramirez[8] (Peru), Irene Pazos[9] (Uruguay). This 2016, we hope to expand our task force team form 10 including myself [10] to maybe double of collaborators from other countries inside and outside the region. So everybody is welcome. Also many thanks to Eugene Khusid IEEE Staff member for providing us support with tools.

Webinars Task Force – Volunteers.

In 2016 we will have more webinars produced in Latin America I order to add value to the membership of our region trying to engage ComSoc and Computer communities.

Telecommunications engineering: 20 years in Colombia receiving the IEEE support

Julio Ernesto Suárez Páez
IEEE Colombian Section, COMSOC, Computer Society Member
juliosuarez@ieee.org

Mayra Liliana Salcedo González
IEEE Colombian Section, COMSOC Member
m.l.salcedogonzalez@ieee.org

****
English version
****

Since 1996 Colombia has had telecommunication engineering studies, a 5 years lasting academic-professional program which is offered by public as well as private universities in several regions of the country.

During this twenty years the Colombian telecommunication engineers have had an active participation in the Colombian ITC sector, occupying positions within the diverse sectors actors, for example: in telecommunication operator like CLARO, UNE, TELEFÓNICA, ETB, INTERNEXA, in the public sector like the Information and Communication Technology Ministry (MinTIC), the Spectrum National Agency (ANE) and other diverse departments; and in the academic and national and international research sector with the participation of professionals and Ph.D. in Colombian universities as well as in other countries.

There are several Colombian universities which for some years have been working with the Telecommunications Engineering program: Universidad Santo Tomás, Universidad Distrital Fransisco José de Caldas, Universidad de Antioquia, Universidad de Medellin, Universidad Pontificia Bolivariana, Universidad Militar Nueva Granada, Universidad Piloto de Colombia, Universidad Católica de Manizales among others. These universities have developed the profession from academy and research, allowing Telecommunications engineers achieve professional success in the Colombian TIC sector.

It´s there where the IEEE with its society *IEEE Communications Society (COMSOC)* y *IEEE Computer Society*, have strengthened the universities since their student branches and professional volunteers, because thanks to the work of IEEE all these institutions have different scientific events like *COLCOM (IEEE Colombian Conference on communications and Computing)* where ITC's industry engineers and researchers from these universities, assigned to the engineering programs, Masters and Ph.D. Telecommunications discipline related can disseminate the results of their research contributing to the development of the TIC Colombian sector.

The IEEE is of great importance for the development and communication of scientific advances in the telecommunications sector, both in Colombia and throughout the region 9. It has great prestige publications circulating in different languages. For example, when it comes to the publication of scientific and technical progress in Spanish and Portuguese, the region has the Magazine IEEE Latin America Transactions which indexes its articles in the most prestigious abstracts and indexing systems such as ISI-Web of Knowledge and Scopus, where has gained prestige, besides going acquiring relevant positions in the Scimago Journal & Country Rank and the Journal Citations Reports®.

On the other hand, if scientific communication in English it is, the IEEE has specialized conferences and publications in which Telecommunications researchers can publish their research and update their technical knowledge with the latest innovations within their fields of action and research, examples of this are: the Journal of Network: The Magazine of Global Internetworking, the IEEE Wireless Communications, the *IEEE GLGOBECOM (Global Conference on communications and Computing)* and the *ICC (IEEE International Conference on Communications)*, among many others.

For all this, to celebrate its 20 years, the Telecommunications Engineering in Colombia thank the IEEE, the IEEE Colombia, the region 9 and the societies: IEEE Communications Society (COMSOC) and IEEE Computer Society for its support in these 20 years in order to succeed at "***Advancing Techology for Humanity***".

Ingeniería de Telecomunicaciones: 20 años en Colombia recibiendo el apoyo del IEEE

Julio Ernesto Suárez Páez
Miembro Sociedad de Computación y COMSOC, IEEE Sección Colombia
juliosuarez@ieee.org

Mayra Liliana Salcedo González
Miembro COMSON, IEEE Sección Colombia
m.l.salcedogonzalez@ieee.org

****
Versión en español
****

Desde 1996 Colombia tiene estudios de Ingeniería de Telecomunicaciones, programa académico profesional, con duración de 5 años, que es ofrecido por Universidades Públicas y Privadas en varias regiones del país.

Durante estos 20 años los Ingenieros de Telecomunicaciones Colombianos han tenido una participación activa en el sector TIC, ocupando cargos dentro de los diversos actores del sector, por ejemplo: en operadores de Telecomunicaciones como Claro, UNE, Telefónica, ETB, Internexa; en el sector público como el Ministerio de Tecnologías de la información y la Comunicación, la Agencia Nacional de Espectro y diversos ministerios; y en el sector académico y de la investigación tanto nacional como internacional, con la participación de profesionales y doctores en Universidades Colombianas y de otros países.

Son varias las Universidades Colombianas que desde hace algunos años han venido trabajando con el programa de Ingeniería de Telecomunicaciones. Entre las que se encuentran, la Universidad Santo Tomás, la Universidad Distrital Francisco José de Caldas, la Universidad de Antioquia, la Universidad de Medellín, la Universidad Pontificia Bolivariana, la Universidad Militar Nueva Granada, la Universidad Piloto de Colombia y la Universidad Católica de Manizales. Estas Universidades han desarrollado la profesión desde la academia y la investigación, permitiendo a los ingenieros de Telecomunicaciones alcanzar el éxito profesional, en el sector TIC Colombiano.

Es allí en donde el IEEE, con sus sociedades *IEEE Communications Society (COMSOC)* y *IEEE Computer Society*, han fortalecido a las Universidades desde sus ramas estudiantiles y con profesionales voluntarios, pues gracias al trabajo del IEEE todas estas instituciones cuentan con distintos eventos científicos como el COLCOM (IEEE Colombian Conference on communicationes and Computing), en donde los Ingeniero de la Industria TIC y investigadores de estas Universidades, adscritos a los programas de Ingeniería, Maestría y Doctorado afines a la disciplina de las Telecomunicaciones pueden difundir los resultados de sus investigaciones aportando así al desarrollo del sector TIC Colombiano.

El IEEE es de gran importancia para el desarrollo y la comunicación de los avances científicos el sector de Telecomunicaciones, tanto en Colombia cono en toda la región 9, pues tiene publicaciones de gran prestigio en diferentes idiomas de circulación. Por ejemplo, cuando se trata de la publicación de avances científicos y técnicos en Español y Portugués la región cuenta con la Revista IEEE Latin America Transactions, la cual indexa sus artículos en los más prestigiosos sistemas de indexación y resúmenes como en ISI-Web of Knowledge y Scopus, en donde ha ganado prestigio, además de ir adquiriendo posiciones relevantes en el Scimago Journal & Country Rank y en el Journal Citations Reports®.

Por otra parte, si de comunicación científica en inglés se trata, el IEEE cuenta con publicaciones y conferencias especializadas en las cuales los investigadores en Telecomunicaciones pueden publicar sus investigaciones y actualizar sus conocimientos técnicos con las últimas innovaciones dentro de sus campos de acción e investigación, ejemplos de ello son el Journal of Network: The Magazine of Global Internetworking, el IEEE Wireless Communications, el *IEEE GLGOBECOM (Global Conference on communicationes and Computing)* y el *ICC (IEEE International Conference on Communications)*, entre muchas otras.

Por todo esto, al celebrar sus 20 años, la Ingeniería de Telecomunicaciones en Colombia, agradecemos al IEEE, al IEEE Colombia, a la región 9 y a las sociedades IEEE Communications Society (COMSOC) y IEEE Computer Society por su apoyo en estos 20 años para el "***Advancing Techology for Humanity***".

Call for participation: 2016 IEEE Volunteer Leadership Training Program (VOLT)

The MGA Training Committee is pleased to announce the launch of the Volunteer Leadership Training Program (VOLT) for this year. As it enters its third successful year, over 80 graduates have completed the program representing all IEEE geographic Regions.

VOLT is targeted to volunteers who have a true desire to learn about the broader IEEE and are considering taking leadership positions within their local units and future IEEE committee roles.

For 2016, the program will run under the same structure as last year:

Track 1 - All IEEE volunteers are invited to participate in Track 1, which covers key organizational units of IEEE and focuses on the foundational knowledge of the organization. These pre-requisite courses will be available to all IEEE volunteers through the IEEE Center for Leadership Excellence (CLE) web site from 29 April through 10 June 2016. Participants will be asked to complete a short quiz at the end of each session.

Track 2 - Volunteers who complete Track 1 by 10 June can apply for consideration for Track 2 of the program, which is planned to start in September. Track 2 will last three months and focus mainly on leadership related topics. Participation in Track 2 will be determined by the MGA Training Committee based on predefined criteria.

Access Track 1 courses (Log in with your IEEE account and choose the "Volunteer Leadership Training Pre-Requisite" category to begin)

E-mail VOLT staff with questions

****Did you know that since its inception in 2013, many graduates have moved into leadership positions?****

- Kate Duncan - R2 - VOLT Class 2014 - Region 2 Director-Elect 2015-2016
- Janet Davis - R7 - VOLT Class 2014 - Ottawa Section Chair 2015-16
- Jesus Fraile Ardanuy - R8 - VOLT Class 2013 - Spain Section Vice Chair 2016-17
- Mario Aleman - R9 - VOLT Class 2013 - Nicaragua Section Chair 2014-2016
- Ruwan Ranaweera - R10 - VOLT Class 2014 - Sri Lanka Section Vice Chair 2014-15

Course Categories:

- Affinity Groups (4)
- Career (6)
- Communications (12)
- Conferences and Special Events (2)
- Ethics and Conduct (2)
- Finance (2)
- Leadership (5)
- Management (3)
- MCE Conference Education Program - eLearning Courses (16)
- MCE Conference Educational Webinar Series - Upcoming / Playback Events (17)
- Membership (13)
- Section, Chapters, Student Branches and Affinity Groups (Geographic Units) Activities and Programs (20)
- Tools (3)
- Volunteer Position Training (24)

Take advantage of IEEE learning resource and be the next leader!

Humanitarian Activities Committee

HAC announces its 2016 Funding Opportunities

Happy New Year! The IEEE Humanitarian Activities Committee (HAC) is pleased to announce its 2016 funding opportunities. Please see below for three different funding programs and their deadlines.

You will find full information and the link to the online proposal portal when you click the button for each program's RFP below.

Best wishes for a successful 2016!

HAC Events

The IEEE Humanitarian Activities Committee (HAC) is tasked with supporting the IEEE Board-endorsed vision of IEEE volunteers around the world carrying out and/or supporting impactful humanitarian activities at the local level - that is, "feet on the ground."

HAC is currently soliciting proposals for the support of elements of events that are aligned with this vision. Support requested may include financial resources, publicity in HAC materials, content development - such as HAC assistance in determining session topics and/or potential speakers - HAC promotional materials, and/or other assistance. HAC seeks to support a range of elements of events across IEEE's regions worldwide.

Please note: HAC will not sponsor entire conferences - rather, it will support elements of events, such as tracks, workshops, sessions, and so on, that are aligned with HAC's vision.

Deadlines:

- January 15
- March 15
- May 15
- July 15
- September 15

HAC Projects

The IEEE Humanitarian Activities Committee (HAC) is tasked with supporting the IEEE Board-endorsed vision of IEEE volunteers around the world carrying out and/or supporting impactful humanitarian activities at the local level - i.e. "feet on the ground."

HAC is currently soliciting proposals for humanitarian projects that are aligned with this vision. The committee will review proposals during three periods in 2016 and will grant awards between US$20,000 and US$100,000. Project activities to be funded by the grant must be completed by the end of calendar year 2016 to be considered.

Deadlines:

- February 15
- May 15
- August 15

SIGHT Projects

The Special Interest Group on Humanitarian Technology (SIGHT) program is a network of IEEE volunteers around the globe that partner with underserved communities and local organizations to leverage technology for sustainable development.

The SIGHT Steering Committee is currently soliciting proposals for SIGHT group project funding. The committee will review proposals during three periods in 2016 and will grant awards between US$500 and US$19,999. Project activities to be funded by the grant must be completed by the end of calendar year 2016 to be considered.

Deadlines:

- February 15
- May 15
- August 15

STEP TECH in Londrina State University, Brazil

João Henrique de Souza - Marketing Director
Londrina State University Student Branch
joao.souza.br@ieee.org

Rafael Matsuyama - Former Chair
Young Professionals South Brazil
rafael.matsuyama@ieee.org

Promoted at the Cyro Grossi auditorium in the State University of Londrina, the STEP TECH was an event with the total length of 8 hours, involving students of technologic fields from Londrina region and professionals from business and academy. The event had 75 participants, consisting mainly of the Londrina region academic community.

This 4th STEP edition organized by the IEEE-UEL Student Branch had a different focus. The themes were based on building a career in the technologic area, offering speeches and workshops related to technology. Embedded systems, telecommunications innovations, energetic efficiency and frequency converters were some of the topics presented during the event. Some soft skills were developed too, with speeches and workshops about speaking, creativity and entrepreneurship.

Inside the academy, the students miss an approximation to business, a world lived by the majority after graduation. The STEP TECH was a kind of bridge, where the undergraduate student could take your first steps to building your career, with the help of experienced professionals.

STEP TECH speakers and staff.

The event had the first speaking of Internet of Things, the newest tendency of the technology market. Gilson Doi Junior, Master in Computer Science by the Londrina State University, presented the concept of Internet of Things and the impact of these in the daily essential objects.

The speaker has finished presenting the first steps to develop projects related to Internet of Things.

One of the topics in the event was the "maker" universe, presented in a speech and workshop by Luckas Farias, Master in Computer Engineering by the Polytechnic School of USP. The speaking was complemented by a workshop focused on the characteristics considered to select the best microcontroller for your project.

During the ending, Rafael Matsuyama, Master in Computer Engineering by the Polytechnic School of USP, co-founder of KognaWorks and Chair of South-Brazil Young Professionals, presented a speech about entrepreneurship and technologic startups, explaining about the growing cycle of a startup, since its beginning until its market establishment. The participants had a solid basis for the way to be an entrepreneur, making real your startup idea.

During the end of the STEP TECH, the initial public expectative was overcame, making a "great job" feel in the organization team. During the next editions, the IEEE-UEL Student Branch plan maintain the focus on the technologic market, but in an expectative to have a bigger public, and bring other companies and teaching institutes, with the most updated content about the technologic market.

Official STEP TECH photo.

Estudiantes R9 ganan concurso internacional de Háptica

Dra. Eloísa del Carmen García-Canseco, - Profesora-Investigadora
Universidad Autónoma de Baja California
eloisagc@ieee.org

El equipo formado por Cristina Ramírez Fernández, estudiante de doctorado en computación del programa de Maestría y Doctorado en Ciencias e Ingeniería de la Universidad Autónoma de Baja California (UABC), y los estudiantes de licenciatura en computación David Bonilla, Oliver Pabloff y Nirvana Green ganaron el concurso **2nd. Student Innovation Challenge 2016**, evento celebrado en el marco del **Haptics Symposium** 2016 en la ciudad de Filadelfia, Pensilvania, USA, del 8 al 11 de abril.

El equipo, asesorado por los profesores investigadores Dra. Eloísa del Carmen García Canseco (miembro IEEE) y Dr. Alberto Leopoldo Morán y Solares, de la Facultad de Ciencias de la UABC compitieron con el proyecto "**Real-time haptic enhanced tele-rehabilitation system for physical therapy**".

Cabe mencionar que el equipo de UABC fue el único representante de Latinoamérica en este magno evento.

Más información del evento en la página:
http://2016.hapticssymposium.org/programstudentinnovationchallenge

Ganadores recibiendo el reconocimiento.

IEEE Member-Get-A-Member (MGM) Program

The membership benefit that pays

Recruiter awards

For each new member you recruit during the membership year (16 August 2015 through 15 August 2016), you earn an award that can be used toward IEEE dues, IEEE Society fees, or the purchase of books and publications (excludes merchandise and products.)

Student members can earn:
- US$2 for each Student or Graduate Student Member recruited
- US$15 for each Professional member recruited
- US$5 for each Professional member recruited to e-Membership (offered in developing nations only)
- The maximum amount a member can earn during the membership year is US$90.

Professional members can earn:
- US$15 for each Professional member recruited
- US$5 for each Professional member recruited to e-Membership (offered in developing nations only)
- The maximum amount a member can earn during the membership year is US$90.

Review the program rules for details

MGM Referal cards

IEEE IN 2030 CHALLENGE

SEED GRANT SEEKS NEXT BIG IDEA.

CALL FOR PROPOSALS

IEEE is always looking for ways to better serve the needs of engineers and technology professionals working in industry. That's why we created the IEEE in 2030 Challenge. This "seed grant" program is designed to encourage and support innovative, creative, and potentially disruptive approaches to serving engineers and technology professionals working in industry. IEEE New Initiatives Committee is currently accepting proposals for short-term (completed in 12 months or less) projects — the deadline is 1 July 2016. Have a great idea that directly addresses the strategic needs of IEEE? Submit your proposal today!

SELECTION CRITERIA FOR FUNDING

Here are some criteria that will increase the likelihood of being selected:

- Quality, innovation and creativity balanced by the project's likelihood of success
- Merit of the proposal to meet a clearly defined need of engineers and technology professionals working in industry
- Has a plan for successful completion of the project that is clear and realistic
- Project is scalable and broad enough to make an impact on the larger IEEE organization
- The application includes a plan to effectively measure success
- Project Leader has expertise to conduct project

KEY DATES FOR 2015

Deliverables	Due Dates
Call for Proposals—Open	Now
Call for Proposals—Closed	1 p.m. EDT (17:00 GMT), 1 July 2016
Notifications for accepted and declined submissions sent	1 August 2016

WHAT IS A SEED GRANT?

Seed grant funding is used for smaller scale initiative projects or pilot programs that are innovative and may entail more risk. These projects may include a proof of concept in preparation for subsequent full-scale implementation. Funding is limited to grants that require US$40,000 or less and take 12 months or less to complete. Funds may not be used to pay salaries or to purchase capital equipment.

WHO CAN SUBMIT?

Seed grant proposals in response to IEEE in 2030 Challenge may be submitted by one or more IEEE members or organizational units, individually or in cooperation with an IEEE staff group.

WHEN TO SUBMIT

The due date for proposals submitted in response to this call is no later than 1:00 p.m. EDT on the due date. To download IEEE Seed Grant Proposal Application visit: http://bit.ly/IEEE-2030-Submit

Please send submissions to the New Initiatives Committee (NIC) by e-mail at newinitiatives@ieee.org.

Note: Include "IEEE in 2030 Challenge Submission" in the subject line of the e-mail for easy identification.

For questions or inquiries please contact John Keaton at j.c.keaton@ieee.org

IEEE
Advancing Technology for Humanity

I35-CA-412-6/15

clements WORLDWIDE

IEEE

International Term Life Insurance for Members of IEEE

Borderless Coverage for a Mobile Workforce

The Clements Worldwide term life insurance program is now available to members residing outside North America.*

Most life insurance policies require medical tests, blood work, and extensive financial screening. In addition, many policies impose coverage limitations, making them inadequate for highly mobile IEEE members. This global term life insurance plan offers worldwide coverage with no lengthy application process.

Program highlights include:

> Guaranteed admittance for active IEEE members
> Easy enrollment with no medical questions or physical exams required
> Program provides coverage limits ranging from US$25,000 to US$500,000
> Affordable, unified rate and monthly payment option
> Monthly premiums as low as US$5.77

Enroll today and receive 60 days complimentary coverage!

Visit www.ieee.clementspartnernetwork.com for more information

Coverage is currently available in the below listed countries. IEEE is working with its insurance partner, Clements Worldwide, to continue expanding this list of countries in the near future.

Europe		Latin America and Caribbean	Asia/PAC
Austria	Italy	Anguilla	East Timor
Belarus	Jersey	Antigua	French Polynesia
Belgium	Latvia	Bahamas	Mauritius
Bulgaria	Liechtenstein	Bermuda	Reunion
Cyprus	Luxembourg	British Virgin Islands	Wallis and Futuna
Czech Republic	Malawi	Cayman Islands	
Denmark	Malta	Dominica	
Egypt	Nambia	El Salvador	
Estonia	Netherlands	Falkland Islands	
Finland	Norway	French Guiana	
France	Oman	Grenada	
Germany	Poland	Guadeloupe	
Gibraltar	Portugal	Jamaica	
Greece	Romania	Martinique	
Guernsey	Slovakia	Saint Barthelemy	
Hungary	Sweden	Saint Martin	
Iceland	Turkey	St. Lucia	
Ireland	United Kingdom	St. Vincent	
Isle of Man	Zimbabwe	Trinidad & Tobago	
Israel			

Questions: Tel: +1.202.478.6589, +1.800.872.0067 ext. 1512, or via email at: cps@clements.com

*Continued membership in IEEE is required to be eligible to participate in this plan.

From my Office Teaching Notes: Emphasizing Four Network Theorems for Resistive Circuits

Rogelio Palomera-García - Senior Member IEEE
University of Puerto Rico at Mayagüez
palomera@ece.uprm.edu

Many times, when students come to my office to clarify concepts, I find myself repeating over and over the same arguments used in explaining concepts and solving problems. Students (and many engineers too) tend to underestimate the power of theory and concentrate the efforts in "gaining practice"in problem solving, as their only way to learn a subject. Even if it may work in some cases, my experience shows that more often than not, students find themselves doing the "same" problem once and again without knowing it. By this I intend to bring out the fact that they have difficulty in discovering the common background.

Another problem that I have encountered is the confusion when applying the concepts in other courses, learning new topics, comparing their notes and textbooks with actual problems from "real world". Examples are "so simple" and numbers" so irrealistic" that they don't see the connection between the worlds.

In several instances, I tried to connect theorems that have been presented in class in my attempts to help students when they have this type of problems. In doing so, I have made use of four particular theorems very often: the substitution theorems [1], and the homogeneity and superposition theorems found in any elementary book on circuits, for example [2]. I consider these four theorems so important that they are the basis of most of the methods, almost all, that I present in a manuscript to be published [3].

I want to share what I tell my students, and examples I have used. I will make reference to these theorems within the particular context of linear resistive networks. This limitation is mainly because I have used the explanation in that context. But also, I can mention two other reasons. First, to stress the fact that this sort of discussion can be introduced early in introductory courses. If the student has a background in matrices, you can even demonstrate the theorems easily. As you advance, introducing more restrictive conditions, it is possible to rephrase the theorems so as to include the new situations. Second, they provide the fundamentals to connect their technological tools and mathematical methods, with the algorithms used to solve many problems.

I hope that sharing these notes may be of interest to my colleagues.

2. The substitution theorems.

The theorems can be stated as follows [1]. The general form requires the circuit to have unique solutions. Since this is always the case for resistive time invariant circuits such as those presented in elementary courses, I do not state explicitly that condition.

Voltage Source Substitution Theorem: Let a circuit be partitioned in two subcircuits A and B as shown in Fig. 1(a). If the voltage v is known, say v = E, than subcircuit A may be substituted by a voltage source of value E without any change of currents and voltages in subcircuit B, including the current i entering the subcircuit. This is illustrated in Fig. 1(b)

Current Source Substitution Theorem: Let a circuit be partitioned in two subcircuits A and B as shown in Fig. 1(a). If the current i is known, say i = Is, than subcircuit A may be substituted by a current source of value Is without any change of currents and voltages in subcircuit B, including the voltage v at the terminals of the subcircuit. This is illustrated in Fig. 1(c).

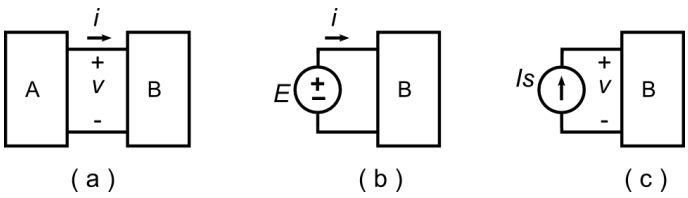

Fig. 1 Substitution Theorems: (a) Case; (b) Voltage Substitution; (c) Current Substitution.

Let us start with an example

Example 1 : An analysis of the circuit in Fig. 2(a) yields the following results:

Vs = 30 V	Is = 7 A	V1 = 6 V	I1 = 3 A
V2 = 12	V I2 = 1 A	V3 = 6 V	I3 = 2 A (= - Iϕ)
V4 = 18 V	I4 = 6 A (6Iϕ)	V5 = - 12	V I5 = 4 A

In inset (b) of the same figure, the voltage source has been substituted by a 7A current source. A 3A current source is also used in Fig. 2(c) substituting resistance R1. The reader can verify that the voltages and currents are equal in all cases.

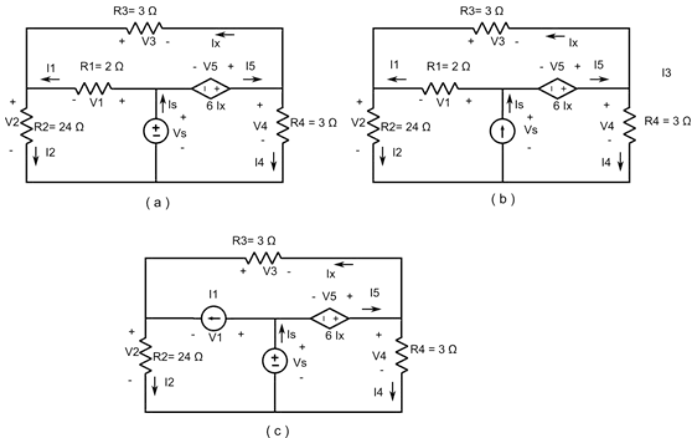

Figure 2: Example of Substitution Theorems: (a) Original circuit; (b) Voltage source substituted by current source; (c) Current Substitution of resistor R1

A more interesting, and common, application of the substitution theorem is found in almost all texts, without explicitly saying it, as it can be seen in the next example.

<u>Example 2</u> Consider the configuration in Fig. 3(a), where block A is a resistive linear subnetwork and the black box element is of any type, like for a example a capacitance or a non linear element. Fig. 3.3(b) shows the substitution of block A by its Thevenin's equivalent. This configuration is much easier to deal with, since it reduces to two equations

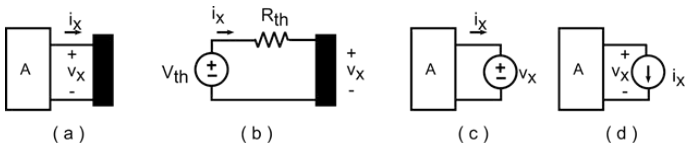

Figure 3: Another Example of Substitution Theorems: (a) Original circuit; (b) Block A substituted by its Thevenin's equivalent; (c) and (d) Substitution theorems applied

Loop equation: $V_{th} = R_{th} i_x + v_x$

and

Element's equation: $f(v_x, i_x) = 0$

The latter may be non linear, or may involve differentials, as it is the case of capacitances and inductances. Whatever the case, if it is possible in most cases to obtain a unique solution by some means, including the use of calculator, and find the values for vx and ix.

Once these values are found, the black box may be substituted by either a voltage or a control source in the original circuit, as shown in Fig. 3(c) and (d), respectively. From this circuit we may solve for the elements in block A.

This example shows a very well known procedure. Yet, the theoretical basis is not usually discussed in class, and it may take time for students to visualize why there are doing this. In fact, many don't get to understand what's happening. They just follow by the example.

Combining this theorem with the other theorems presented in this note, we get a great calculation tool that may simplify applications. We left the example for section 4.

Finally, concerning these theorems of substitution, they give sense to the way we proceed in teaching other courses, like for example electronics. Why do we study isolated amplifiers? Well, because these work with the input signal, which for all practical purposes may be substituted by a source!

3. Homogeneity and Superposition Theorems.

Consider a circuit with only one independent source, as illustrated by Fig. 4. The source may be of any type. If it is a voltage source, then Vs is known and Is is to be calculated, and vice versa. In fact, except for situations where a mathematical inconsistency may arise, the treatment of these magnitudes is a matter of mathematical convenience. For general discussion, we shall speak of a source z, without any particular reference to the type of magnitude, except if confusion may arise.

Theorem of Homogeneity: In a linear network with only one independent source of value z, (Fig. 4), when this source is substituted by one of value Kz, where K may be a constant, every then every current and voltage in the circuit will be multiplied by K. Mathematically, this is usually stated as

If the system is linear and $y = f(z)$, then $y_1 = f(Kz) = k f(z) = ky$

<u>REMARK</u>: If the circuit in Fig. 4 contains only linear resistors, linear dependent sources, and operational amplifiers in linear operation, then the principle of homogeneity is also valid when K is a time function. This special case is not applicable to circuits containing elements that are either time dependent or whose characteristic may involve time dependence, as it happens with capacitances or inductances.

According to my experience, this remark is not as trivial as it may appear. Many students in their early stages get lost if a source in the circuit is time dependent. Specially if they want to use a tool such as Mathlab, calculators, and so on. For linear resistive circuits, the theorem of homogeneity takes the form of a Principle of Proportionality. This principle can be stated as follows:

Principle of Proportionality: If a linear resistive network has only one independent source z, then every current and voltage in the circuit is of the form Kz, where K is a constant which depends exclusively on the circuit elements, but not on the source.

The demonstration can be done using the fact that we are working with a set of linear systems with constant coefficients. When we solve, we arrive to the Principle. Let us first look at a numerical example.

Example 3 Consider again the circuit of Fig. 1(a). If the source Vs is changed to 24e—100t V, then every current and voltage should be multiplied by 0.8e—100t, which is the factor needed to convert the original 30 V source to the new one. Therefore, we have now

$V2 = 9.6e^{-100t}$ V $I2 = 0.8e^{-100t}$ A

$V4 = 13.6e^{-100t}$ V $I4 = 4.8e^{-100t}$ A (6I-)

$V3 = 4.8e^{-100t}$ V $I3 = 1.6e^{-100t}$ A (= - I-)

$V5 = -9.6e^{-100t}$ V $I5 = 3.2e^{-100t}$ A

Furthermore, if we want a specific voltage, say V4 to be of another value M, then we multiply all elements, including the source, by M/6, so we have the required source value as well as the new currents and voltage. When using a softwar package or calculators, we can, in general introduce the values into a matrix to have an easier way to calculate.

The example above illustrates one of the advantages of making available to students this theorem in early times:

1. If the circuit has only one source of the form Kf(t), where K is a numerical constant and f(t) a function of time, then make your calculations with a source equal to K, and multiply all results by f(t)

Other advantages, among a larger list:

2. Once you solve a resistive circuit for one source value, you have solved it for any value within a multiplication factor
3. A symbolic source, that is a source of the type z = K, where K is a letter, can be solved numerically using z=1, and then multiplying voltages and currents by K.
4. Network functions such as equivalent resistance or transfer functions, are directly calculated using a unit value source.

Let us now look at superposition, which is how we call the additivity property of linear systems for the particular case of linear circuits:

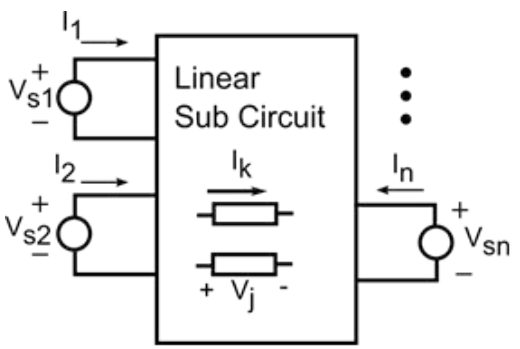

Fig. 4 Multiple source circuit

Principle of Superposition: Let a circuit have n independent sources Z1,Z2, . . . ,Zn, as illustrated in Fig. 4. Any voltage Vj or current Ik in the circuit, including voltage or currents in the sources may be expressed in the form

$$V_j = V_{j1} + V_{j2} + \cdots + V_{jn} \quad (2)$$

$$I_k = I_{k1} + I_{k2} + \cdots + I_{kn} \quad (3)$$

where V_{jh} is the value of voltage V_j and I_{kh} the value current I_k when all independent sources except Z_h, h = 1, 2, . . . , n are 0 (turned-off).

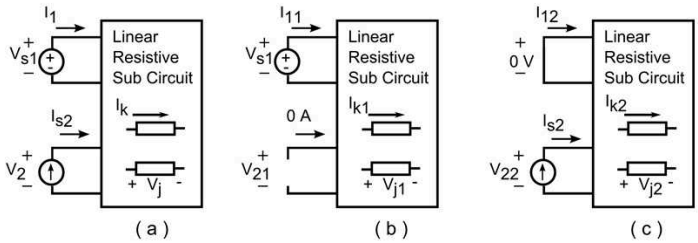

Fig. 5: Illustrating the superposition process: (a) original circuit; (b) current source zero; (c) voltage source zero

Fig. 5 illustrates the process for two sources, and linear resistive circuits. From this illustration and the principle of proportionality, we can easily derive the following statement.

Superposition in Resitive Circuits: In resistive circuits every voltage Vj and current Ik will be of the form

$$X_j = k_{j1} Z_1 + k_{j2} Z_2 + \ldots + kV_{jn} Z_n \quad (4)$$

Let us take an example which will help us to illustrate some of the consequences of stating the principle of superposition in form (4) for resistive networks.

Example 4. A circuit has three sources, V1=2 V, I2 = 4 mA and V3 = 1.8 V. The response of interest is a current Io. The following results are known after applying superposition:

- When I2 and V3 are turned off, Io = 2.8 mA.
- When V1 and V3 are turned off, Io = 4.7 mA.
- When V1 and I2 are turned off, Io = 6.5 mA.

Answer the following questions:

1. What is the value of Io?

ANSWER: (2.8 + 4.7 + 6.5) mA = 14.0 mA

2. How do you express io as a function of the three sources?

ANSWER: Io = $(2.8\times10^{-3} / 2)$ V1 + (4.7/4) I2 + $(6.5\times10^{-3} / 1.8)$ V3 = 1.4×10^{-3} V1 + 1.175 I2 + 3.611×10^{-3} V3

3. What is the current Io if V1=3.6 V, I2 = 11.3 e-20t mA and V3 = 7.3 cos(500 t) V?

ANSWER:Io = [1.4x3.6 + 1.175 x 11.3 e^{-20t} I2 + 3.611x 7.3 cos(500t)] mA

Writing equations for superposition. If we are using tools such as Matlab, Mathematica, graphic calculators and others that allow us to work easily with matrices, it becomes easier to work superposition in few steps. Let us introduce the general way of how to set up equations for solving equations with matrices.

No matter what method you prefer to write down the set of linear equations for your resistive circuit, it can be shown that any equation of the circuit can be writen in the form

$$a_{j1}x_1 + a_{j2}x_2 + \cdots + a_{jm}x_m = b_{j1}z_1 + b_{j2}z_{j2} + \cdots + b_{jk}z_k$$

where the variables x_h stand for those of the selected method (branch currents or voltages, nodal potentials, etc.), z_h stand for the sources in the network, and coefficients will depend on the method used.

The set of all equations can be written then in matrix form as

$$\mathbf{Ax} = \mathbf{B}_1 z_1 + \mathbf{B}_2 z_2 + \cdots \mathbf{B}_k z_k = \mathbf{Bz} \qquad (5)$$

where **A** is the coefficient matrix of order m × m, the **Bj** are column vectors of order m × 1, and **B** is the matrix formed with those column vectors. Vectors **x** and **z** are the variable and source vectors, respectively.

Notice that if all sources z are zero, with the exception of z_h, then (5) reduces to

$$\mathbf{Ax} = \mathbf{B}_h z_h \qquad (6)$$

From the practical point of view of numerical calculations, this means that when solving (5) with

$$\mathbf{x} = \mathbf{A}^{-1}\mathbf{Bz} \qquad (7)$$

the multiplication $\mathbf{A}^{-1}\mathbf{B}$ has all the information concerning the individual contributions of the sources: colum j provides the contribution of source z_j

As a practical matter, we might consider vector z a "dummy" vector in the following sense:

• If source zj is a source of numerical value K, or of the form K f(t), we incorporate already the value of K in the equations, in column Bj. For the second case, we multiply in the solution the respective column by f(t).

• If the source is symbolic, i.e., just a letter, we consider it to be of value 1, and multiply the respective colum by that letter in the final solution.

Example 5: Take the circuit of Fig. 6. Normally, if we are not interested on the currents in the voltage sources, the nodal equations for this circuit would be written in the form (8). For numerical convenience, resistances are shown in kW units, which means that currents must be in mA units.

For superposition purposes, we may write the same equations in the form (9), where the first column stands for the case where the voltage source of 5V is turned off, and the second column corresponds to the case where the current source of 2 mA becomes 0.

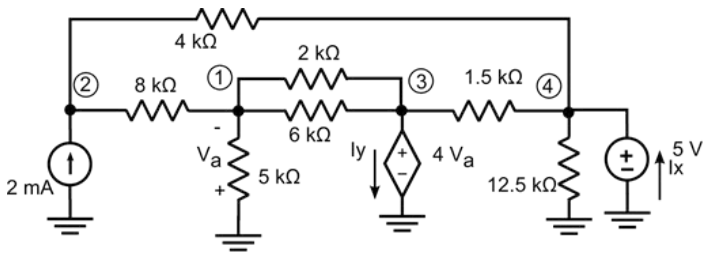

Fig. 6 Example to illustrate superposition.

$$\begin{bmatrix} \frac{1}{5}+\frac{1}{2}+\frac{1}{6}+\frac{1}{8} & -\frac{1}{8} & -\frac{1}{2}-\frac{1}{6} \\ -\frac{1}{8} & \frac{1}{8}+\frac{1}{4} & 0 \\ 4 & 0 & 1 \end{bmatrix} \begin{bmatrix} V_1 \\ V_2 \\ V_3 \end{bmatrix} = \begin{bmatrix} 0 \\ 2+\frac{5}{4} \\ 0 \end{bmatrix} \qquad (8)$$

$$\begin{bmatrix} \frac{1}{5}+\frac{1}{2}+\frac{1}{6}+\frac{1}{8} & -\frac{1}{8} & -\frac{1}{2}-\frac{1}{6} \\ -\frac{1}{8} & \frac{1}{8}+\frac{1}{4} & 0 \\ 4 & 0 & 1 \end{bmatrix} \begin{bmatrix} V_1 \\ V_2 \\ V_3 \end{bmatrix} = \begin{bmatrix} 0 & 0 \\ 2 & \frac{5}{4} \\ 0 & 0 \end{bmatrix} \qquad (9)$$

Solving (9) – with Matlab – we obtain

$$\begin{bmatrix} V_1 \\ V_2 \\ V_3 \end{bmatrix} = \begin{bmatrix} 0.1843 & 0.1152 \\ 5.3948 & 3.3717 \\ -0.7373 & -0.4608 \end{bmatrix} \qquad (10)$$

The first colum represents the contribution of the current source, while the second column shows the contribution of the voltage source. For a current source 2cos(600t) mA, and a voltage source of 5 V, the result for V2 would read V2 = 5.3948 cos (600t) + 3.3717 V

4. Combining theorems

Let me present an a finalexample where the four theorems are now combined to help in calculations.

Example 6. Let us find the node voltages for the circuit of Fig. 7, for t>0, assuming an initial condition of 2 V for the voltage in the capacitance. Following the process illustrated by Fig. 3, we first find the Thevenin equivalent circuit seen by the capacitance. This can be done substituting the capacitance by a current source I. The coefficient of I in the solution of V2 corresponds to the

Thevenin resistance, while the other term is the Thevenin voltage source [2]. When we substitute the capacitance by a current source, we have again the circuit of Fig. 6, with the current source now being of the symbolic type. By the homogeneity property, we can thus divide the column of the contribution of the current by 2 and get

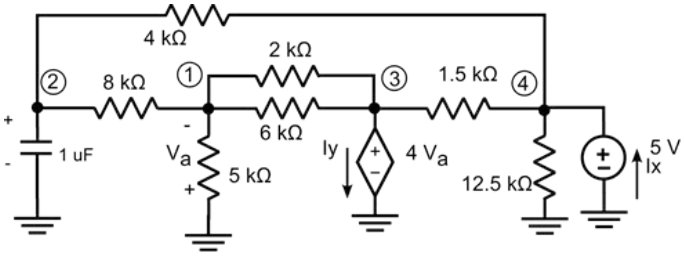

Fig. 7 Example for a circuit with capacitance and initial conditions.

$$\begin{bmatrix} V_1 \\ V_2 \\ V_3 \end{bmatrix} = \begin{bmatrix} 0.0922 & 0.1152 \\ 2.6974 & 3.3717 \\ -0.3687 & -0.4608 \end{bmatrix} \qquad (11)$$

Since the first column is the contribution of the current source, the row corresponding to V2 means that the equivalent circuit from the capacitance point of view is that of Fig. 8

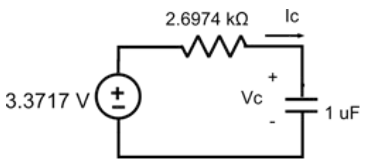

Fig. 8 Equivalent circuit seen by the capacitance

Using the time constant $\tau = (2.6974\ k\Omega)(1\ \mu F) = 2.6974\ ms$, the solution for the capacitance voltage and current are, respectively

$$V_C = 3.3717 + (2 - 3.3717)\exp(-370.72t) \quad V$$

$$IC = \frac{1.3717\exp(-370.72t)}{2.6974} \quad mA \quad = 508.5\exp(-370.72t)\ \mu A$$

By the substitution theorem, we can now use the capacitance as a current source (Fig. 6) with I = -IC.

Therefore, using the principle of superposition, and recalling that resistance values are in kilohms, we can read the following for the node potentials in expression (11):

V1 = -92.2 IC + 0.1152 V

V2 = -2.6974 x 10^3 IC + 3.3717 V = VC

V3 = 368.7 IC - 0.4608 V

5. Final Remarks

I have found in class, and in my office hours, that these theorems are not given enough attention when talking to students about them. Yet, they are remarkably useful from the theoretical point of view as well as practical, because of the long list of applications.

References

[1] L. O. Chua, Introduction to Nonlinear Network Theory, New York: McGraw-Hill, 1969

[2] S. Karni, Analysis of Electrical Networks, New York: Wiley and Sons, 1986

[3] R. Palomera-Garcia, Your calculator TI-89 as a tool in learning circuits: A toolbook for Electrical Engineering Students, Personal Manuscript 2014, to be published.

IEEE Región 9 se solidariza con nuestros hermanos Ecuatorianos por el sismo de gran magnitud sucedido en la noche del 16 de abril.
¡Fuerza y animo amigos!

IEEE R9 REGION 1966 - 2016 50 YEARS

R9SAC team

IEEE LATINCOM™

2016 IEEE Latin - American Conference on Communications
Nov 15 – 17 de 2016
Medellín, Colombia
http://www.ieee-latincom.org

IEEE COLOMBIA

IEEE ComSoc™
IEEE Communications Society

General Chair:
Ferney Amaya, Universidad Pontificia Bolivariana, COL

Executive Director:
Jose David Cely, Universidad Distrital Francisco José de Caldas

Technical Program Co-Chair:
Yezid Donoso, Universidad de los Andes, COL
Charalabos Skianis, University of the Aegean

Keynote & Tutorials Chair:
Carlos Lozano, Universidad de los Andes, COL

Publication Chair
Carlos Eduardo Velásquez, Universidad de los Andes, COL

Social Media Chair
Ana María Ospina, Ruta N

Chair:
Bruce Worthman, IEEE ComSoc

Webmaster:
Fabian Peña, IEEE Colombia

Advisory Committee:
Nelson Fonseca, UNICAMP (Brazil)
Stefano Bregni, Politecnico di Milano, Italy

Organizers:
IEEE ComSoc
IEEE Colombia Section
IEEE Colombia ComSoc Chapter

Supported by:
Universidad Pontificia Bolivariana

CALL FOR PAPERS

The 8th Latin-American Conference on Communications (LATINCOM 2016) will be held in Medellin at the UPB (Universidad Pontificia Bolivariana), Colombia on 15th – 17th November 2016. The IEEE LATINCOM is the premier ComSoc organized in Latin America. It has attracted authors and attendees from the four corners of the world since its first editions. This event will be an excellent opportunity to join together researchers, professors, students and the industry. Accepted papers will be published in IEEE Xplore and besides a selection of the best papers will be published in the IEEE Latin America Transactions (an ISI indexed journal).
Medellin has the unique contrast of a vital and rapidly developing metropolis and vibrant nature, with spring like weather and an excellent tourism platform for congress, conferences, and general events. Between tradition and transformation it becomes a center for big business under innovation and entrepreneurship schemes. The city offers competitive costs and wellness, providing visitors with the best places for interaction of academic, professional, commercial, cultural, artistic, and social activities. Medellin was awarded the 2013 "Innovative City of the Year Award" in a contest run by the Wall Street Journal Magazine and the Urban Land Institute (ULI) for its implementation of sustainable innovation and a unique budgeting system.

TOPICS

We encourage the submission of original, unpublished research focused on (but not limited to) the following topics of interest:

NETWORKING
Networking for Cloud Computing
Mobile Cloud Computing
Communications for Smart grid
Peer-to-Peer networking
Social Networks
Network Virtualization
Software Define Network
Big Data Management
Content-oriented Infrastructures

COMMUNICATION SERVICES
Emergency Communications
Broadcast services (Digital TV, HDTV, IPTV, etc.)
Multimedia Services and Applications
Service Security and Privacy
Services for disaster situations and humanitarian services
Location-based Information Systems
Communications for Intelligent Transport Systems
E-Health E-Governance, E-Transportation, E-Agriculture etc.

OPTICAL NETWORKS
Elastic networks
Access networks
Optical communications
Optical & wireless convergence

COMMUNICATIONS SYSTEMS AND SIGNAL PROCESSING
Communication Theory
Power Line Communications
Radio Communications
Satellite & Space Communications
Signal Processing & Communications Electronics
Data storage
Transmission, access and optical system
Cross-layer design

WIRELESS COMMUNICATIONS AND NETWORKING
5G and 4G Communications and Networking
Device-to-Device and Machine-to-Machine communications
Internet of things and Smart Cities
Cognitive networks and Cross-layer design
Ad Hoc, sensor, mesh and access networks
Radio, Satellite and space communications
Software Defined Networking and wireless cloud
Cognitive networks

SUSTAINABLE COMMUNICATIONS AND ENERGY EFFICIENCY
Green wireless and fixed-line communications
Energy-efficient protocols and networks
Green Data Centers and Cloud Networking
Energy-Efficient Datacenters and Networks
Smart Grid communications
Trials and experiences of operators

COMMUNICATION QOS, RELIABILITY AND PERFORMANCE MODELING
Communications systems integration and modeling
Performance evaluation
Reliability of systems and networks
Traffic engineering and traffic theory
Traffic characterization and measurements
Quality of Experience and Quality of Service

ENABLING TECHNOLOGIES
Network management
Switching and Routing
Internet protocols
Communications protocols
Communications and information security

IMPORTAN DATES

July 31th, 2016	Paper and Tutorials Proposals Submission Deadline
September 30th, 2016	Notification of acceptance
October 15th, 2016	Final author manuscript submission deadline

PAPER SUBMISSION

/e invite authors to submit high-quality full papers reporting original and novel research results on all above topics. Papers must be written in English, unpublished and not submitted lsewhere. Full papers must be formatted as the standard IEEE double-column conference template and submitted exclusively in PDF on JEMS (https://submissoes.sbc.org.br) at the EE LATINCOM 2016 page. Maximum 6 pages are allowed for each paper, including all illustrations and references

CALL FOR TUTORIALS

roposals are invited for half-/full-day tutorials on topics of interest of the conference. Proposals must be submitted by e-mail to latincom@ieee.org.co, including title, abstract, full ontact information, introduction to the subject, preferred length, past history, biography of the lecturer, and the detailed outline.

ARGENCON 2016
Congreso Bienal de IEEE Argentina

Lugar:
Universidad Tecnológica Nacional, Facultad Regional Buenos Aires, Av, Medrano 951, Almagro, Ciudad Autónoma de Buenos Aires, Argentina.

Fechas Importantes:

Evento: 15 al 17 de Junio 2016.

Envío de resumen: 21 de Diciembre de 2015.

Carga del trabajo completo: 28 de Marzo de 2016.

Notificación de aceptación: 02 de Mayo de 2016.

Fecha límite para envío de trabajos corregidos: 16 de Mayo de 2016.

Importante: la fecha de envío de trabajos no implica eliminación, sino la posibilidad de obtener la registración con descuento.

Aranceles*:
Profesional:
- No-socio $1,000
- Socio $700

Profesional Autor:
- No-socio $800
- Socio $500

Estudiante:
- No-socio $600
- Socio $400

Estudiante Autor:
- No-socio $400
- Socio $250

*Se consideran socios a: Socio: IEEE, AADECA, SABI, UTN. Precios validos hasta el 28/02/2016.

Para mayor información
Visite: http://www.argencon.org.ar

Contacto por e-mail
argencon@ieee.org.ar
sec.argentina@ieee.org

Organizado por:

IEEE Argentina

ARGENCON: Congreso Bienal de IEEE Argentina.

Presentación de trabajos:
Se invita a participar con la presentación de trabajos originales, no publicados en otros medios, los cuales serán sometidos a referato. Trabajos seleccionados por su calidad se publicarán en IEEE Latin America Transactions.

Actividades previstas:
- Presentación de trabajos en formato oral y poster.
- Sesiones Plenarias de disertantes distinguidos.
- Eventos de capítulos, ramas estudiantiles y grupos de afinidad.
- Workshops.
- Seminarios.

Tópico/temáticas principales:
- **Aeronáutica y espacio.**
- **Antenas, Propagación y Compatibilidad electromagnética.**
- **Bioingeniería.**
- **Ciberseguridad y ciberdefensa.**
- **Circuitos y sistemas, dispositivos electrónicos y microelectrónica.**
- **Comunicaciones.**
- **Computación y Sistemas.**
- **Control, automatización y robótica.**
- **Dispositivos electrónicos y circuitos de estado sólido.**
- **Educación.**
- **Electrónica de potencia y aplicaciones industriales.**
- **Geociencias y Sensoramiento Remoto**
- **Gestión de la Ingeniería y la Tecnología.**
- **Implicancia social de la tecnología.**
- **Ingeniería oceánica.**
- **Inteligencia computacional.**
- **Procesamiento de señales.**
- **Teoría y técnicas de microondas.**
- **Sistemas de potencia.**
- **Sistemas ópticos y fotónica.**
- **Videojuegos y Gamificación.**

Objetivos:
Los objetivos de **IEEE Argentina** para **ARGENCON** son:
- Sostener un evento propio bianual para difundir e intercambiar las actividades del "**ámbito técnico IEEE**", que reúna a los interesados en el amplio espectro de áreas del conocimiento abarcadas por el Instituto como son Potencia, Computación, Comunicaciones, Bioingeniería, Robótica, Tecnología Aeroespacial, Inteligencia Artificial o Ingeniería Oceánica, así como áreas 'transversales', como Educación, Gerenciamiento en Ingeniería o Impacto Social de las Tecnologías.
- Colaborar en el esfuerzo de promover **el interés y entusiasmo en los jóvenes por el estudio y la formación en las ciencias y la tecnología.**
- Promover la participación de diferentes **ramas de la industria**, con el objeto de promover las actividades conjuntas. Contribuyendo, de esta manera, al objetivo primario del IEEE: "**Advancing Technology for Humanity".**

IEEE
Argentina Section

CONFERENCE COMMITTEES

General Chair
Carlos Monsalve,
Escuela Superior Politécnica del Litoral

Technical Program General Chair
Diego Benítez,
Universidad San Francisco de Quito USFQ

Technical Chapter & Invited Sessions co-Chairs

Industrial Electronics & Control Systems Society Chapter
Alberto Sánchez
Universidad San Francisco de Quito USFQ

Power & Energy Society Chapter
Jaime Cepeda
Centro Nacional de Control de Energía

Engineering in Medicine and Biology Chapter
Mónica Huerta
Universidad Politécnica Salesiana

Computer Society Chapter
Katherine Chiluiza, Enrique Peláez
Escuela Superior Politécnica del Litoral

Computational Intelligence Society Chapter
Enrique Peláez
Escuela Superior Politécnica del Litoral

Communications Society Chapter
Germán Vargas
Escuela Superior Politécnica del Litoral

Robotics & Automation Society Chapter
Diego Benítez
Universidad San Francisco de Quito USFQ

CEIS—Software Engineering Invited Session
Mónica Villavicencio
Escuela Superior Politécnica del Litoral
Omar Gómez
Escuela Superior Politécnica del Chimborazo

Technical Program co-Chairs
Mario Berges, *Carnegie Mellon University, USA*
Bosco Fernandes, *University of Manchester, UK*
Reza Katebi, *University of Strathclyde, UK*
Claudio Cañizares, *University of Waterloo, Canada*
Rafael Fierro, *The University of New Mexico, USA*
Jose Luis Rojo-Álvarez, *Universidad Rey Juan Carlos, Spain*
Rito Mijarez Castro, *Instituto de Investigaciones Eléctricas, Mexico*
Vinicio Carrera, *Universidad de las Fuerzas Armadas, Ecuador*
Roman Lara, *Universidad de las Fuerzas Armadas, Ecuador*

Publication Chair
Omar Aguirre
Universidad San Francisco de Quito USFQ

Patrons & Sponsors

ASECEI — ASOCIACIÓN ECUATORIANA DE INSTITUCIONES DE ENSEÑANZA DE INGENIERÍA

DATES

Full Paper Submission: **30 June 2016**

Notification of Acceptance: **17 July 2016**

Final Paper Submission: **30 July 2016**

Workshop & Tutorials: **10-11 October 2016**

Conference: **12-14 October 2016**

ETCM 2016

IEEE Ecuador Technical Chapters Meeting

SCOPE

IEEE ETCM 2016 aims to provide a comprehensive and highly prestigious venue for academics, engineers and researchers in particular from Ecuador Technical Chapters fields of expertise.

The conference covers both theoretical and practical issues related to Communications, Computing, Control Systems, Industrial Electronics, Engineering in Medicine and Biology, Power and Energy, Robotics and Automation. Topics of interest, but not limited to, are:

TOPICS

SYSTEMS AND CONTROL:
Adaptive Systems, Signal Processing, Embedded Systems, Fault Tolerant Systems, Identification, Predictive control.

INDUSTRIAL ELECTRONICS
Power Converters, Power semiconductors, Machines and drives, Power electronics in transportation systems, Power electronics applications

COMMUNICATIONS
Internet of Things, Communications Systems Security, Green Communications, Wireless Communications, Optical Communications, Waveforms and Signal Processing, Access Networks and Systems, Cluster, Grid, P2P Cloud Computing, Satellite and Space Communications, Networking protocols and performance.

COMPUTER
Security and Privacy, Semantic Computing, Real Time Systems, Multimedia Computing, Learning Technologies, Distributed Processing, Human Computer Interaction, Computer Vision, Data Engineering.

COMPUTATIONAL INTELLIGENCE
Neural Networks, Fuzzy Systems, Evolutionary and Swarm Computation, Learning Systems, Data Science.

POWER AND ENERGY
Transmission, Distribution, Power Generation, Power System Control & Operation, Reliability, Stability, Renewables, SmartGrids.

ENGINEERING IN MEDICINE AND BIOLOGY
Clinical Engineering, Telemedicine,and Health Care, Bioinformatics, Biomechanics, Biomaterials, Bioinstrumentation, Signal and Image Processing, Biophysics

ROBOTICS AND AUTOMATION SYSTEMS
Automation, Automation in Logistics and Supply Chain Management, Sensors, Robotics, Assistive Technologies, System Integration, Sensor/Actuator Networks, Distributed and Cloud Robotics, Autonomous Vehicles, Human/Robot Interaction.

CEIS — SOFTWARE ENGINEERING INVITED SESSION
Software design, software building, software production processes, Quality, design methodologies, artificial intelligence aplied to software engineering, education, process models, verification and validation, integration and operation, human aspects in software engineering, software project management.

IEEE Advancing Technology for Humanity

sites.ieee.org/etcm-2016

CALL FOR PAPERS

2016 IEEE INTERCON

Piura, August 02-05, 2016

The IEEE XXIII International Congress on Electronics, Electrical Engineering and Computing – INTERCON 2016 invites you to submmit a full length original research contributions from engineering professionals from industries, R&D organizations, academic institutions, government departments and research scholars from across the world. Full length original research contributions and review articles not exceeding six pages as per the IEEE double column format shall be submitted.

The manuscript should contribute original research ideas, developmental ideas, analysis, findings, results, etc. The manuscript should not have been published in any journals/magazines or conference proceedings and not under review any of them. Further the manuscript should contain the name of the corresponding author with e-mail id and affiliation of all authors. All the submitted manuscripts will be sent for peer review and the corresponding author will be notified the outcome of the review process. If reviewers recommend for further improvements in the manuscript, the manuscript will be sent back to the corresponding author and the revised version of the manuscript shall be submitted within 30 days on the date of notification.

For detailed information on proposal and paper submission procedure, please refer to the conference website: http://udep.edu.pe/ingenieria/intercon-2016/?section=call-for-papers

Submission

The official language of IEEE INTERCON is English. Papers must be submitted in PDF and should be no longer than 6 pages, following the IEEE Conference format, available on: http://1drv.ms/1Qzo3gv.

Papers can be submitted using the Easychair System by accessing the following address:
https://easychair.org/conferences/?conf=intercon2016

Accepted technical and special session papers will appear in IEEEXplore Digital Library.

Important Dates

Due date for paper submission:	08, April 2016
Notification of acceptance:	22, June 2016
Camera-ready paper submission:	22, July 2016
Conference dates:	02-05, August 2016

General Chair: José Durán-Talledo
joseduran@ieee.org
Program Chair: William Ipanaqué-Alama
william.ipanaque@udep.pe
Information contact: Avid Román-González
avid.roman-gonzalez@ieee.org

Sponsored by: IEEE Peru Section
Organized by: Universidad de Piura IEEE Student Branch
http://www.ieeeperu.org

IEEE Sección Perú IEEE

For Information and Program Updates visit: http://udep.edu.pe/ingenieria/intercon-2016/

Su opinión es muy importante para el NoticIEEEro

Estimado Miembro IEEE,

Con el fin de mejorar cada día nuestras publicaciones, nos gustaría conocer su opinión y sugerencias.

Cuéntenos sus impresiones acerca del NoticIEEEro, responda esta breve encuesta en el link https://es.surveymonkey.com/r/6P8LT6Z, o enviando un correo a noticieeero@ieee.org.

Muchas gracias por su tiempo.

Equipo editorial NoticIEEEro

1.- Sección a la que pertenece

2.- Tipo de membresía

3.- ¿Qué sección del NoticIEEEro le parece más interesante?

4.- ¿Qué secciones le gustaría que agreguemos en la revista?

5.- ¿Le gustaría seguir recibiendo futuras ediciones?

6.- ¿Le gustaría participar en el equipo de Edición del NoticIEEEro? En caso de ser positiva su respuesta, déjenos su nombre y correo electrónico.

Cartas al editor

Lo invitamos a enviar sus comentarios acerca de la revista al correo noticieeero@ieee.org, a partir de la edición 101 estaremos incluyendo la sección "Cartas al editor".

Next deadline on June 20th

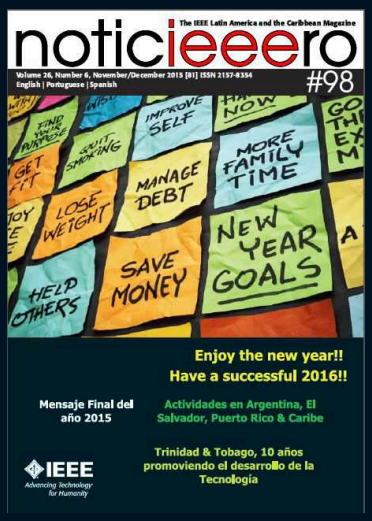

We invite you to send us articles.

The NoticIEEEro is the official magazine of IEEE Region 9.

http://sites.ieee.org/r9/publicaciones-2/noticieeero/

2016 - 2017 Editorial Calendar

# | N°	Deadline | Cierre de Edición	Distribution | Distribución
101	Mon 20 Jun 2016	Sun 3 Jul 2016
102	Sat 20 Aug 2016	Sat 3 Sep 2016
103	Thu 20 Oct 2016	Thu 3 Nov 2016
104	Tue 20 Dec 2016	Tue 3 Jan 2017
105	Mon 20 Feb 2017	Fri 3 Mar 2017

Check the new dates!