DOCUMENT RESUME

ED 132 272 CE 008 444

TITLE Aviation Electrician's Mate 1 & C. Rate Training Manual and Nonresident Career Course.
INSTITUTION Naval Education and Training Command, Pensacola, Fla.
REPORT NO NAVEDTRA-10349-D
PUB DATE 76
NOTE 392p.
AVAILABLE FROM Superintendent of Documents, U.S. Government Printing Office, Washington, D.C. 20402 (Stock Number 0502-LP-051-7460).

EDRS PRICE MF-$0.83 HC-$20.75 Plus Postage.
DESCRIPTORS Autoinstructional Aids; *Aviation Technology; Correspondence Courses; *Electrical Systems; *Electricians; Instructional Materials; *Job Training; Manuals; Military Training; Textbooks
IDENTIFIERS *Aviation Electronics; Navy

ABSTRACT

One of a series of training manuals prepared for enlisted personnel in the Navy and Naval Reserve who are studying for advancement in the Aviation Electrician's Mate (AE) rating, this text is based upon the Navy's professional occupational standards for AEI and AEC. Contents include a 10-chapter text followed by a subject index and the associated nonresident career course (eight reading assignments and technical questions based upon each occupational standard in the respective assignment). Recommended use includes individual preparation for advancement examinations as well as everyday on-the-job training. Chapter headings are (1) Aviation Electrician's Mate Rating, (2) Supply and Publications, (3) Aircraft Electrical Control and Distribution, (4) Air Data Computer Systems, (5) Attitude/Heading Reference Bombing Computer Systems, (6) Inertial Navigation, (7) Automatic Flight Control System, (8) Power Plant and Aircraft Environmental Systems, (9) Maintenance Techniques, and (10) Test Equipment. The appendix includes the U.S. customary and metric system units of measurement. (HD)

PREFACE

This Rate Training Manual is one of a series of training manuals prepared for enlisted personnel of the Navy and Naval Reserve who are studying for advancement in the Aviation Electrician's Mate (AE) rating. As indicated by the title, this manual is based upon the professional occupational standards for AE1 and AEC.

The associated AE 1&C nonresident career course is included as the last section of this manual. Preceding the nonresident career course is a listing of the occupational standards for AE1 and AEC which cross-references the occupational standards to the assignments in the nonresident career course. Technical questions based upon each occupational standard are provided in the indicated assignment. Full use of these study aids will greatly assist the AE1 and AEC in preparing for the advancement examination. This manual and the attendant nonresident career course are valuable aids as review sources for those preparing for AECS and AVCM. Their use for everyday on-the-job training is highly recommended.

This training manual was prepared by the Naval Education and Training Program Development Center, Pensacola, Florida, for the Chief of Naval Education and Training. Technical review of the manuscript was provided by personnel in AE schools, NATTC, Memphis, Tennessee, and various fleet activities.

Revised 1976

Stock Ordering No.
0502-LP-051-7460

Published by
NAVAL EDUCATION AND TRAINING SUPPORT COMMAND

UNITED STATES
GOVERNMENT PRINTING OFFICE
WASHINGTON,D.C.: 1976

THE UNITED STATES NAVY

GUARDIAN OF OUR COUNTRY

The United States Navy is responsible for maintaining control of the sea and is a ready force on watch at home and overseas, capable of strong action to preserve the peace or of instant offensive action to win in war.

It is upon the maintenance of this control that our country's glorious future depends; the United States Navy exists to make it so.

WE SERVE WITH HONOR

Tradition, valor, and victory are the Navy's heritage from the past. To these may be added dedication, discipline, and vigilance as the watchwords of the present and the future.

At home or on distant stations we serve with pride, confident in the respect of our country, our shipmates, and our families.

Our responsibilities sober us; our adversities strengthen us.

Service to God and Country is our special privilege. We serve with honor.

THE FUTURE OF THE NAVY

The Navy will always employ new weapons, new techniques, and greater power to protect and defend the United States on the sea, under the sea, and in the air.

Now and in the future, control of the sea gives the United States her greatest advantage for the maintenance of peace and for victory in war.

Mobility, surprise, dispersal, and offensive power are the keynotes of the new Navy. The roots of the Navy lie in a strong belief in the future, in continued dedication to our tasks, and in reflection on our heritage from the past.

Never have our opportunities and our responsibilities been greater.

CONTENTS

CHAPTER Page

APPENDIX

Nonresident career course follows index

CHAPTER 1

AVIATION ELECTRICIAN'S MATE RATING

Navy training is changing in several ways. For example, it is becoming more and more individualized, a change brought about by the introduction of scores of programmed instruction courses and a few audio/visual courses. These types of courses permit a student to choose his medium of instruction and to proceed at his own pace (self-paced instruction). Then too, all future instructional material must be job related and "system-designed;" that is, it must teach the trainee to do a task, and it must follow a specific pattern, including defining the need, planning, developing, and evaluating the course. Thus all elements required for a complete course will be included in each unit. Training for men and women in many ratings will be planned from the time they enter the Navy until they retire. The objective is to use all the training given and eliminate the "over-training" prevalent in the past. Many, if not all, "A" schools will be reduced in length; some other schools will be eliminated. Consequently, more training must be done aboard the ship or station. To expedite onboard training, a great many "onboard training packages" will be produced.

This training manual is designed to aid the AE2 in preparing for advancement to AE1, and the AE1 in preparing for advancement to AEC. It is based primarily on the professional requirements for AE1 and AEC as specified in the *Manual of Qualifications for Advancement*, NAVPERS 18068 (Series). It should be kept in mind that changes in the professional qualifications occurring after the change 8 revision to the "Quals" manual may not be reflected in this rate training manual.

At the time of this writing, the name of the *Manual of Qualifications for Advancement* is being changed to *Manual of Navy Enlisted Manpower and Personnel Classifications and Occupational Standards*, NAVPERS 18068. The new occupational standards are discussed later in this chapter. In preparing to take the fleetwide advancement examination, you should become familiar with the applicable occupational standards as well as the other references listed in *Bibliography for Advancement Study*, NAVEDTRA 10052 (Series).

In preparing this training manual, every effort has been made to cover professional matters adequately and yet within reasonable bounds. It has been designed to give the prospective AE1 or AEC a good working knowledge of all subjects covered by the qualification standards. It includes new material required as a result of new equipment.

ENLISTED RATING STRUCTURE

The present enlisted rating structure includes two types of ratings: general ratings and service ratings.

GENERAL RATINGS are designed to provide paths of advancement and career development. A general rating identifies a broad occupational field of related duties and functions requiring similar aptitudes and qualifications. General ratings provide the primary means used to identify billet requirements and personnel qualifications. Some general ratings include service ratings; others do not. Both Regular Navy and Naval Reserve personnel may hold general ratings.

Subdivisions of certain general ratings are identified as SERVICE RATINGS. These service ratings identify areas of specialization within the scope of a general rating. Service ratings are established in those general ratings in which specialization is essential for efficient utilization of personnel. Although service ratings can exist at any petty officer level, they are most common at the PO3 and PO2 levels. Both Regular Navy and Naval Reserve personnel may hold service ratings.

AE RATING

The Aviation Electrician's Mate rating is a general rating and is included in Navy Occupational Group IX (Aviation). There are no AE service ratings.

Where occupational content is related, general ratings have been combined at certain pay grades to form broader occupational fields. In the case of the AE rating, this takes place at the E-9 level. At this level the AE rating loses its identity and personnel in this rating advance, along with ATCS, AQCS, and AXCS to Master Chief Avionics Technician (AVCM). Figure 1-1 illustrates the paths of advancement from Airman Recruit to Master Chief Avionics Technician.

The *Manual of Navy Enlisted Manpower and Personnel Classifications and Occupational Standards,* NAVPERS 18068 (Series), establishes the AEs technical responsibilities. The AE1 or AEC, working in a supervisory position, is required to review and evaluate completed inspection forms and reports; analyze reports of discrepancies and malfunctions and determine corrective action; schedule and assign workloads; determine repair procedures for aircraft electrical equipment; interpret directives from higher authorities; and maintain quality control of work performed.

When advanced to AE1 or AEC, even more responsibilities are to be yours. As a senior petty officer, you must possess more than technical knowledge. You must assume greater responsibility not only for your own work but also for the work of others who serve under you. Briefly, the AE1 and AEC must be a supervisor, inspector, and instructor, as well as an accomplished military leader. Senior petty officers are therefore vitally concerned with the Naval Leadership Program.

As a result of the Naval Leadership Program, a considerable amount of material related to naval leadership for the senior petty officer is available. Studying this material will make you aware of your many leadership responsibilities as a senior petty officer, and will also be helpful in developing leadership qualities. It will not in itself, however, make you a good leader. Leadership principles can be taught, but a good leader acquires that quality only through hard work and practice.

As you study this material containing leadership traits, keep in mind that probably none of our most successful leaders possessed all of these traits to a maximum degree, but a weakness in some traits was more than compensated for by stength in others. Critical self-evaluation will enable you to realize the traits in which you are strong, and to capitalize on them. At the same time you must strive to improve in the areas in which you are weak.

Your success as a leader will be decided, for the most part, by your achievements in inspiring others to learn and perform. This is best accomplished by personal example.

Assignments available to the AEs vary widely. In addition to the various types of maintenance activities to which lower rated personnel are assigned (discussed in *AE 3 & 2,* NAVEDTRA 10348), Second Class and above are eligible for assignment to instructor duty as well as a number of other desirable shore billets. Most of these billets are under the management control of BUPERS and are directly associated with training. Others are associated with research, testing, or evaluation. Some of the more desirable billets to which the AE may be assigned are described in the following paragraphs.

Instructor duty is available at the Naval Air Technical Training Center, Memphis, Tennessee, in schools such as the following:

1. Aviation Familiarization Course, Class P.
2. Aviation Electrician's Mate School, Class A1.
3. Aviation Electrician's Mate Intermediate Course, Class C7.

In addition to the above listed instructor billets, the AE may be assigned to instructor

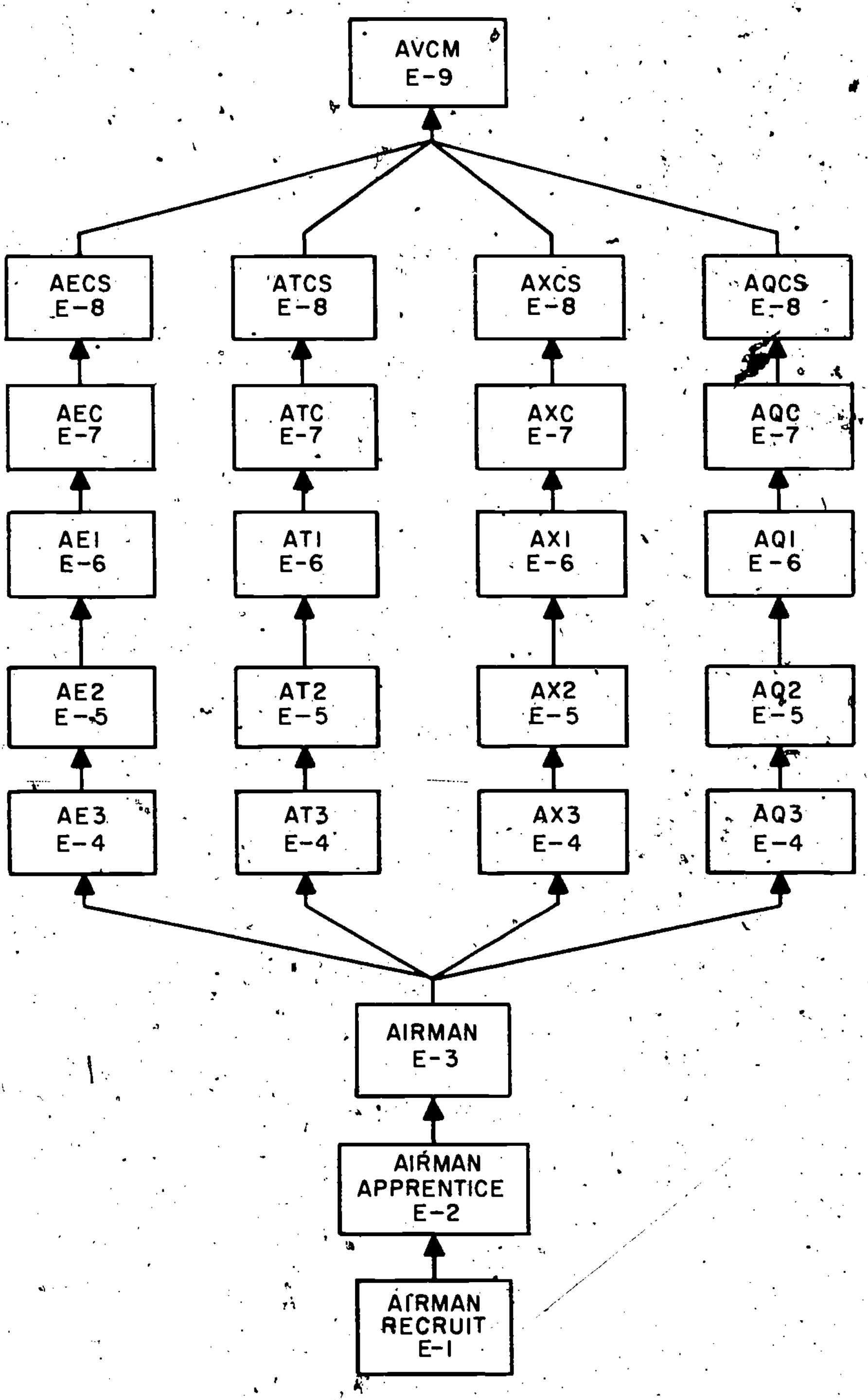

207.1

Figure 1-1.—Paths of advancement.

duty with a Naval Air Maintenance Training Detachment (NAMTD). NAMTDs are located at shore stations on both coasts. Personnel assigned to this duty are first sent to Naval Air Maintenance Training Group headquarters at NATTC Memphis for a period of indoctrination and instruction.

For a listing of other special programs and projects, reference should be made to the *Enlisted Transfer Manual.* Others are also announced from time to time in BUPERS Notices and the quarterly edition of Link (NAVPERS 15980).

AEs are also eligible for assignment to duty with the Naval Education and Training Program Development Center, headquartered at Pensacola, Florida, as a Technical Writer to assist in the preparation of Rate Training Manuals and Nonresident Career Courses (formerly called Enlisted Correspondence Courses) for the AE ratings, and as an exam writer in the preparation of the Navy-wide advancement examinations for enlisted personnel.

There are a number of special programs and projects to which enlisted personnel may be assigned. Some of these involve research; others may involve testing or evaluation. An example of such an assignment is with the Naval Aviation Integrated Logistic Support Center (NAILSC), NATC, Patuxent River, Maryland. Their mission is to develop recommended personnel requirements for squadrons operating and maintaining the latest types of weapons systems.

Personnel may indicate their desire for assignment to a specific program or project by indicating it in the "remarks" block of their Enlisted Duty Preferences (NAVPERS 1306/63).

ADVANCEMENT

By this time, you are probably well aware of the personal advantages of advancement—higher pay, greater prestige, more interesting and challenging work, and the satisfaction of getting ahead in your chosen career. By this time, also, you have probably discovered that one of the most enduring rewards of advancement is the training you acquire in the process of preparing for advancement.

The Navy also profits by your advancement. Highly trained personnel are essential to the functioning of the Navy. By advancement, you increase your value to the Navy in two ways: First, you become more valuable as a technical specialist, and thus make far-reaching contributions to the entire Navy; and second, you become more valuable as a person who can supervise, lead, and train others.

Since you are studying for advancement to PO1 or CPO, you are probably already familiar with the requirements and procedures for advancement. However, you may find it helpful to read the following sections. The Navy does not stand still. Things change all the time, and it is possible that some of the requirements have changed since the last time you went up for advancement. Furthermore, you will be responsible for training others for advancement; therefore, you will need to know the requirements in some detail.

HOW TO QUALIFY FOR ADVANCEMENT

1. Have a certain amount of time in grade.
2. Complete the military and professional requirements as set forth in the *Manual of Navy Enlisted Manpower and Personnel Classifications and Occupational Standards,* NAVPERS 18068.
3. Complete the Personnel Advancement Requirement (PAR) form NAVPERS 1414/4.
4. Be recommended by his commanding officer.
5. Demonstrate his KNOWLEDGE by passing a written examination on (a) military requirements, and (b) professional qualifications.

The Navy-wide written examination administered for all petty officer grades is a 150-question test. The E4 through E7 examinations contain 150 multiple choice, professional questions, whereas the E8 test contains only 50 professional and the E9 test only 45 professional questions.

Three different scores are important when discussing advancement examinations. Two scores, the RAW SCORE and the STANDARD SCORE, deal directly with the examination. The FINAL MULTIPLE SCORE includes points for the STANDARD SCORE, the performance

Table 1-1.—Computation of final multiple score

PAYGRADE	FACTOR	MAXIMUM POINTS	PERCENTAGE OF TOTAL POINTS
E4/E5	Examination standard score	80	35%
	Performance	70	30%
	Experience	80	35%
E6	Examination standard score	80	30%
	Performance	92	35%
	Experience	92	35%
E7	Examination standard score	80	60%
	Performance	52	40%
E8	Examination standard score	80	50%
	Performance	52	50%
E9	Examination standard score	80	40%
	Performance	120	60%

marks, and for experience (E4 through E6 only). The RAW SCORE is based on a maximum of 150 (the number of questions on the examination) and represents the number of questions answered correctly on the examination. An E4 must have a RAW SCORE of 43 in order to pass the examination. An E5 must have a RAW SCORE of 48, and E6 through E9 advancement candidates must have a 53 RAW SCORE to pass. Statistically, these RAW SCORES produce a 90-98% passing rate. A candidate MUST pass the test in order to be considered for advancement.

When a candidate passes the examination, his RAW SCORE is converted to a STANDARD SCORE that has a minimum of 20 and a maximum of 80 points. This STANDARD SCORE is the number of points the examination contributes to the candidate's FINAL MULTIPLE SCORE. (See table 1-1.)

At the time of this writing the division of FINAL MULTIPLE SCORE points is as shown in table 1-1. The performance marks are calculated from the annual or semiannual evaluation marks assigned by the division officer. Experience points are assigned according to length of service, time in rate, the number of awards (ribbons), and points earned by passing previous advancement examinations. E4 through E6 candidates are advanced directly as a result of this FINAL MULTIPLE SCORE. The Chief of Naval Personnel assigns quotas for each rate and rating. The assigned number of people with the highest FINAL MULTIPLE SCORE are advanced and all others that have passed the examination are notified that they passed but were not advanced (PNA).

The names of at least the top 50% of the E7 and the top 75% of the E8 and E9 candidates who pass the advancement examination are placed before selection boards convened by the Chief of Naval Personnel. The selection board considers the FINAL MULTIPLE SCORE as well as entries in each candidates service jacket in making its final selection for advancement.

Remember that the requirements for advancement can change. Check with your educational services office to be sure that you know the most recent requirements. Some of these general requirements may be modified in certain ways. Figure 1-2 gives an overall view of the requirements for advancement of active duty

REQUIREMENTS *	E1 to E2	E2 to E3	# E3 to E4	# E4 to E5	E5 to E6	† E6 to E7	† E7 to E8	† E8 to E9
SERVICE	4 mos. service- or completion of Recruit Training.	8 mos. as E-2.	6 mos. as E-3. 2 years time in service.	12 mos. as E-4. 3 years time in service.	24 mos. as E-5. 6 years time in service.	36 mos. as E-6. 9 years time in service.	36 mos. as E-7. 8 of 12 years time in service must be enlisted.	36 mos. as E-8. 10 of 15 years time in service must be enlisted.
SCHOOL	Recruit Training. (C.O. may advance up to 10% of graduating class.)		Class A for PR3, DT3, PT3, AME 3, HM 3, PN 3, FTB 3, MT 3,			Navy School MUC, MNC.††		
PERFORMANCE TEST			Specified ratings must complete applicable performance tests before taking examinations.					
ENLISTED PERFORMANCE EVALUATION	As used by CO when approving advancement.		Counts toward performance factor credit in advancement multiple.					
EXAMINATIONS **	Locally prepared tests.	See below.	Navy-wide examinations required for all PO advancements.				Navy-wide selection board.	
RATE TRAINING MANUAL (INCLUDING MILITARY REQUIREMENTS)		Required for E-3 and all PO advancements unless waived because of school completion, but need not be repeated if identical course has already been completed. See NavEdTra 10052 (current edition).					Nonresident career courses and recommended reading. See NavEdTra 10052 (current edition).	
AUTHORIZATION	Commanding Officer		NAVEDTRAPRODEVCEN					

* All advancements require commanding officer's recommendation.

† 3 years obligated service required for E-7, E-8, and E-9.

\# Military leadership exam required for E-4 and E-5.

** For E-2 to E-3, NAVEDTRAPRODEVCEN exams or locally prepared tests may be used.

†† Waived for qualified EOD personnel.

Figure 1-2.—Active duty advancement requirements.

personnel; figure 1-3 gives this information for inactive duty personnel.

HOW T[illegible]ARE FOR ADVANCEMENT

What must you do to prepare for advancement? You must study the occupational standards for advancement, work on the practical factors, study applicable Rate Training Manuals, and study other material that is required. You will need to be familiar with the following:

1. *Manual of Navy Enlisted Manpower and Personnel Classifications and Occupational Standards, NAVPERS 18068 (Series).*
2. *Personnel Advancement Requirement,* NAVEDTRA 1414/4.
3. *Bibliography for Advancement Study,* NAVEDTRA 10052 (Series).
4. Applicable Rate Training Manuals and their companion Nonresident Career Courses.

Collectively, these documents make up an integrated training package tied together by the occupational standards. The following paragraphs describe these materials and give some information on how each one is related to the others.

Occupational Standards Manual

The *Manual of Navy Enlisted Manpower and Personnel Classifications and Occupational Standards,* NAVPERS 18068 (Series), hereinafter referred to as the *Occupational Standards Manual,* gives the MINIMUM requirements for advancement. The *Occupational Standards Manual* can be found in your educational services office, or may be obtained from your Training Petty Officer.

Occupational standards are expressed as task statements only. The approved concept for occupational standards is that they define what enlisted personnel must do in their rate or rating, and that the knowledges required to perform a task are inherent to the proper performance of the task.

Occupational standards are identified by a five-digit number of which the first two digits identify the standard topic title and the remaining three digits identify the specific task statement. The standards are of two general types: military requirements, and professional (or technical) requirements.

The occupational standards and a bibliography of study materials are available in your educational services office. The *Occupational Standards Manual* is changed more frequently than Rate Training Manuals are revised. By the time you are studying this training manual, the occupational standards for your rating may have been changed. Never trust any set of occupational standards until you have checked the change number against an UP-TO-DATE copy of the occupational standards manual.

In training others for advancement, emphasize these two points about the occupational standards:

1. The occupational standards are the MINIMUM requirements for advancement. Personnel who study MORE than the required minimum will have a great advantage when they take the written examinations for advancement.
2. Each occupational standard has a designated rate level—chief, first class, second class, or third class. You are responsible for all occupational standards specified for the rate level to which you are seeking advancement AND all occupational standards specified for lower rate levels.

PERSONNEL ADVANCEMENT REQUIREMENT (PAR) PROGRAM NAVPERS 1414/4

The Personnel Advancement Requirement (PAR) Program is a new program initiated to replace the Record of Practical Factors (NAVEDTRA 1414/1).

The former "quals" were stated in terms of practical factors and knowledge factors. The new occupational standards are presented only as task statements. This new format of the occupational standards does not lend itself to the practical factor checkoff list concept of the *Record of Practical Factors.* As a result, a new form and new concept of determining elegibility for advancement has been developed. The *Personnel Advancement Requirement (PAR)*

REQUIREMENTS *	E1 to E2	E2 to E3	E3 to E4	E4 to E5	E5 to E6	E6 to E7	E8	E9
TOTAL TIME IN GRADE	4 mos.	8 mos.	6 mos.	12 mos.	24 mos.	36 mos. with total 9 yrs service	[illegible] mos. with total 12 yrs service	24 mos. with total 15 yrs service
TOTAL TRAINING DUTY IN GRADE †	14 days	14 days	14 days	14 days	28 days	42 days	42 days	28 days
PERFORMANCE TESTS			Specified ratings must complete applicable performance tests before taking examination.					
DRILL PARTICIPATION	Satisfactory participation as a member of a drill unit in accordance with BUPERSINST 5400.42 series.							
RATE TRAINING MANUAL (INCLUDING MILITARY REQUIREMENTS)	Completion of applicable course or courses must be entered in service record.							
EXAMINATION	Standard Exam		Standard Exam required for all PO advancements. Also pass Military Leadership Exam for E-4 and E-5.				Standard Exam, Selection Board.	
AUTHORIZATION	Commanding Officer		NAVEDTRA PRODEVCEN					

* Recommendation by commanding officer required for all advancements.
† Active duty periods may be substituted for training duty.

Figure 1-3.—Inactive duty advancement requirements.

NAVPERS 1414/4) will replace the *Record of Practical Factors.* This new system allows a command to evaluate the overall abilities of an individual in a day-to-day work situation and eliminates the need to complete a mandatory, lengthy, and detailed checkoff list.

The E-8 and E-9 are exempt from the program as there are other means of selection for advancement to these paygrades. The E-3 apprenticeships are so broad as to make the development of a single PAR impractical.

Each rating PAR lists the requirements for advancement to paygrades E-4 through E-7 in one pamphlet. It contains descriptive information, instructions for administration, special rating requirements, and advancement requirements in the following sections:

Section I—Administration Requirements
Section II—Formal School and Training Requirements
Section III—Occupational and Military Ability Requirements

Section I contains the individual's length of service, time in rate, and a checkoff for the individual having passed the E-4/E-5 Military Leadership Examination.

Section II contains a checkoff entry for the individual having completed the Military Requirements Navy Training Course and the applicable Navy Training Course for the rating.

Section III is a checkoff list of task statements. Items in this section are to be interpreted broadly and do not demand actual demonstration of the item, or completion of alternate local examination, although demonstration is a command prerogative. Individuals are evaluated on their ability to perform the task. Evaluation may be by observation of ability in related areas, training received, or by demonstration.

There is currently a pilot program which includes the PQS watch station qualifications and preventive maintenance actions as a separate section of the PAR form. Section III under this program lists task statements required of the rating which are not reflected in the PQS qualifications. As PQS qualifications are developed, PAR forms will be revised.

The *Record of Practical Factors* will remain in effect until 1 January 1977 at which time the PAR form will become effective.

PAR forms are stocked in the Navy Supply System.

NAVEDTRA 10052

The *Bibliography for Advancement Study,* NAVEDTRA 10052 (Series) is a very important publication for anyone preparing for advancement. This bibliography lists required and recommended Rate Training Manuals and other reference material to be used by personnel working for advancement. NAVEDTRA 10052 is revised and issued once each year by the Chief of Naval Education and Training. Each revised edition is identified by a letter following the NAVEDTRA number; be SURE you have the most recent edition.

The required and recommended references are listed by the rate level in NAVEDTRA 10052. It is important to remember that you are responsible for all references at lower rate levels, as well as those listed for the rate to which you are seeking advancement.

Rate Training Manuals that are marked with an asterisk (*) in NAVEDTRA 10052 are MANDATORY at the indicated rate levels. A mandatory training manual may be completed by (1) passing the appropriate nonresident career course that is based on the mandatory training manual; (2) passing locally prepared tests based on the information given in the mandatory training manual; or (3) in some cases, successfully completing an appropriate Navy school.

When training personnel for advancement, do not overlook the section of NAVEDTRA 10052 which lists the required and recommended references relating to the military requirements for advancement. All personnel must complete the mandatory military requirements training manual for the appropriate rate level before they can be eligible to advance. Also, make sure that personnel working for advancement study the references listed as recommended but not mandatory in NAVEDTRA 10052. It is important to remember that ALL references listed may be used as source material for the written examinations, at the appropriate levels.

Rate Training Manuals

There are two general types of Rate Training Manuals. Rate Training Manuals (such as this one) are prepared for most enlisted rates and ratings, giving information that is directly related to the professional standards for advancement. Subject matter manuals give information that applies to more than one rating.

Rate Training Manuals are revised from time to time to bring them up to date technically. The revision of a Rate Training Manual is identified by a letter following the NAVEDTRA number. You can tell whether a Rate Training Manual is the latest edition by checking the NAVEDTRA number (and the letter following the number) in the most recent edition of the List of Training Manuals and Correspondence Courses, NAVEDTRA 10061. NAVEDTRA 10061 is actually a catalog that lists current training manuals, nonresident career courses, and correspondence courses; you will find this catalog useful in planning your study program.

Rate Training Manuals are designed for the special purpose of helping naval personnel prepare for advancement. By this time, you have probably developed your own way of studying these manuals. Some of the personnel you train, however, may need guidance in the use of Rate Training Manuals. Although there is no single "best" way to study a training manual, the following suggestions have proved useful for many people:

1. Study the military requirements and the professional standards for your rate before you study the training manual, and refer to the occupational standards frequently as you study. Remember, you are studying the training manual primarily to meet these occupational standards.
2. Set up a regular study plan. If possible, schedule your studying for a time of day when you will not have too many interruptions or distracitons.
3. Before you begin to study any part of the training manual intensively, get acquainted with the entire manual. Read the preface and the table of contents. Check through the index. Thumb through the manual without any particular plan, looking at the illustrations and reading bits here and there as you see things that interest you.
4. Look at the training manual in more detail, to see how it is organized. Look at the table of contents again. Then, chapter by chapter, read the introduction, the headings, and the subheadings. This will give you a clear picture of the scope and content of the manual.
5. When you have a general idea of what is in the training manual and how it is organized, fill in the details by intensive study. In each study period, try to cover a complete unit—it may be a chapter, a section of a chapter, or a subsection. The amount of material you can cover at one time will vary. If you know the subject well, or if the material is easy, you can cover quite a lot at one time. Difficult or unfamiliar material will require more study time.
6. In studying each unit, write down questions as they occur to you. Many people find it helpful to make a written outline of the unit as they study, or at least to write down the most important ideas.
7. As you study, relate the information in the training manual to the knowledge you already have. When you read about a process, a skill, or a situation, ask yourself some questions. Does this information tie in with past experience? Or is this something new and different? How does this information relate to the occupational standards?
8. When you have finished studying a unit, take time out to see what you have learned. Look back over your notes and questions. Maybe some of your questions have been answered, but perhaps you still have some that are not answered. Without referring to the training manual, write down the main ideas you have learned from studying this unit. Do not just quote the manual. If you cannot give these ideas in your own words, the chances are that you have not really mastered the information.
9. Use nonresident career courses whenever you can. The courses are based on Rate Training Manuals or other appropriate texts. As mentioned before, completion of a mandatory Rate Training Manual can be accomplished by passing the nonresident career course based on the training manual. You will probably find it helpful to take other courses as well as those

based on mandatory training manuals. Taking a nonresident career course helps you to master the information given in the training manual, and also gives you an idea of how much you have learned.

INCREASED RESPONSIBILITIES

When you assumed the duties of a PO3, you began to accept a certain amount of responsibility for the work of others. With each advancement, you accept an increasing responsibility in military matters and in matters relating to the professional work of your rate. When you advance to PO1 or CPO, you will find a noticeable increase in your responsibilities for leadership, supervision, training, working with others, and keeping up with new developments.

As your responsibilities increase, your ability to communicate clearly and effectively must also increase. The simplest and most direct means of communication is a common language. The basic requirement for effective communication is, therefore, a knowledge of your own language. Use correct language in speaking and in writing. Remember that the basic purpose of all communication is understanding. To lead, supervise, and train others, you must be able to speak and write in such a way that others can understand exactly what you mean.

Leadership and Supervision

As a PO1 or CPO, you will be regarded as a leader and supervisor. Both officers and enlisted personnel will expect you to translate the general orders given by officers into detailed, practical, on-the-job language that can be understood and followed by relatively inexperienced personnel. In dealing with your juniors, it is up to you to see that they perform their jobs correctly. At the same time, you must be able to explain to officers any important problems or needs of enlisted personnel. In all military and professional matters, your responsibilities will extend both upward and downward.

Along with your increased responsibilities, you will also have increased authority. Officers and petty officers have POSITIONAL authority–that is, their authority over others lies in their positions. If your CO is relieved, for example, he no longer has the degree of authority over you that he had while he was your CO, although he still retains the military authority that all seniors have over subordinates. As a PO1, you will have some degree of positional authority; as a CPO, you will have even more. When exercising your authority, remember that it is positional–it is the rate you have, rather than the person you are, that gives you this authority.

A good Petty Officer conscientiously and proudly exercises his authority to carry out the responsibilities he is given. He takes a personal interest in the success of both sides of the chain of command . . . . authority and responsibility. For it is true that the Petty Officer who does not seek out and accept responsibility, loses his authority and then the responsibility he thinks he deserves. He must be sure, by his example and by his instruction, that the Petty Officers under him also accept responsibility. In short, he must be the leader his title–Petty Officer–says he is.

Training

As a PO1 or CPO, you will have regular and continuing responsibilities for training others. Even if you are lucky enough to have a group of subordinates who are all highly skilled and well trained, you will still find that training is necessary. For example, you will always be responsible for training lower rated personnel for advancement. Also, some of your best workers may be transferred; and inexperienced or poorly trained personnel may be assigned to you. A particular job may call for skills that none of your personnel has. These and similar problems require that you be a training specialist–one who can conduct formal and informal training programs to qualify personnel for advancement, and one who can train individuals and groups in the effective execution of assigned tasks.

In using this training manual, study the information from two points of view. First, what do you yourself need to learn from it? And second, how would you go about teaching this information to others?

Training goes on all the time. Every time a person does a particular piece of work, some learning is taking place. As a supervisor and as a training expert, one of your biggest jobs is to see that your personnel learn the RIGHT things about each job so that they will not form bad work habits. An error that is repeated a few times is well on its way to becoming a bad habit. You will have to learn the difference between oversupervising and not supervising enough. No one can do his best work with a supervisor constantly supervising. On the other hand, you cannot turn an entire job over to an inexperienced person and expect him to do it correctly without any help or supervision.

In training lower rated personnel, emphasize the importance of learning and using correct terminology. A command of the technical languages of your occupational field (rating) enables you to receive and convey information accurately and to exchange ideas with others. A person who does not understand the precise meaning of terms used in connection with the work of his rating is definitely at a disadvantage when he tries to read official publications relating to his work. He is also at a great disadvantage when he takes the examinations for advancement. To train others in the correct use of technical terms, you will need to be very careful in your own use of words. Use correct terminology and insist that personnel you are supervising use it too.

You will find the *Personnel Advancement Requirement*, NAVPERS 1414/4, a useful guide in planning and carrying out training programs. From this record, you can tell which practical factors have been checked off and which ones have not yet been done. Use this information to plan a training program that will fit the needs of the personnel you are training.

On-the-job training is usually controlled through daily and weekly work assignments. When you are working on a tight schedule, you will generally want to assign each person to the part of the job that you know he can do best. In the long run, however, you will gain more by assigning personnel to a variety of jobs so that each person can acquire broad experience. By giving people a chance to do carefully supervised work in areas in which they are relatively inexperienced, you will increase the range of skills of each person and thus improve the flexibility of your working group.

Working With Others

As you advance to PO1 or CPO, you will find that many of your plans and decisions affect a large number of people, some of whom are not even in your own occupational field. It becomes increasingly important, therefore, for you to understand the duties and the responsibilities of personnel in other ratings. Every petty officer in the Navy is a technical specialist in his own field. Learn as much as you can about the work of others, and plan your own work so that it will fit into the overall mission of the organization.

Keeping Up With New Developments

Practically everything in the Navy—policies, procedures, publications, equipment, systems—is subject to change and development. As a PO1 or CPO, you must keep yourself informed about changes and new developments that affect you or your work in any way.

Some changes will be called directly to your attention, but others will be harder to find. Try to develop a special kind of alertness for new information. When you hear about anything new in the Navy, find out whether there is any way in which it might affect the work of your rating. If so, find out more about it.

SOURCES OF INFORMATION

As a PO1 or CPO, you must have an extensive knowledge of the references to consult for accurate, authoritative, up-to-date information on all subjects related to the military and professional requirements for advancement.

Publications mentioned in this chapter are subject to change or revision from time to time—some at regular intervals, others as the need arises. When using any publication that is subject to revision, make sure you have the latest edition. When using any publication that is kept current by means of changes, be sure you have a copy in which all official changes have been made.

In addition to training manuals and publications, trainings films furnish a valuable source of supplementary information. Films that may be helpful are listed in the U.S. Navy Film Catalog, NAVAIR 10-1-777.

ADVANCEMENT OPPORTUNITIES FOR PETTY OFFICERS

Making chief is not the end of the line as far as advancement is concerned. Advancement to Senior (E-8) and Master (E-9) Chief, and advancement to Warrant Officer and Commissioned Officer are among the opportunities that are available to qualified petty officers. These special paths of advancement are open to personnel who have demonstrated outstanding professional ability, the highest order of leadership and military responsibility, and unquestionable moral integrity.

ADVANCEMENT TO SENIOR AND MASTER CHIEF

Chief petty officers may qualify for the advanced grades of Senior and Master Chief. These advanced grades provide for substantial increases in pay, together with increased responsibilities and additional prestige. The requirements for advancement to Senior and Master Chief are subject to change but, in general, include a certain length of time in grade, a certain length of time in the naval service, a recommendation by the commanding officer, and a sufficiently high mark on the Navy-wide examination. The final selection for Senior and Master Chief is made by a regularly convened selection board.

Examination Subjects

Standards for advancement to Senior Chief Petty Officer and Master Chief Petty Officer have been developed and published in the *Occupational Standards Manual,* NAVPERS 18068 (Series). They officially establish minimum military and professional standards for Senior and Master Chief Petty Officers.

Bibliography for Advancement Study, NAVEDTRA 10052 (Series), contains a list of study references which may be used to study for both military and professional requirements.

Satisfactory completion of the nonresident career course titled *Military Requirements for Senior and Master Chief Petty Officer,* NAVEDTRA 91209, is mandatory for advancement to E8.

ADVANCEMENT TO WARRANT AND COMMISSIONED OFFICER

It has been demonstrated that the Navy has a need for warrant officers to serve as officer technical specialists, and limited duty officers to serve as officer technical managers.

New paths from enlisted to warrant and LDO and from warrant to LDO have recently been implemented and are shown in figure 1-4. Application may be made for a grade indicated by an arrow. E-7s and E-8s with 12 to 16 years may not apply simultaneously for LDO ensign and W-2. Only two applications may be made while in any one pay grade.

Once appointed W-2, ex-enlisteds will continue progression to W-3, then W-4 as in the past, or after two years of warrant service, may apply for LDO Lt.(jg). Once appointed LDO ensign, ex-enlisteds will progress through the LDO grades as in the past.

The dotted line from the second E-9 box at the extreme right of figure 1-4 means that E-9s with two years of performance equivalent to W-2 duties, may be recommended by the procurement board for appointment as W-3 instead of W-2.

Enlisted personnel of the Regular Navy and Naval Reserve on active duty may seek appointment to warrant status via the Warrant Officer Program or regular commissioned status via the Limited Duty Officer Program.

Personnel seeking appointment under either of the programs should familiarize themselves with the laws and regulations governing appointment, retirement, reversions, and career matters as contained in the *Career Planning*

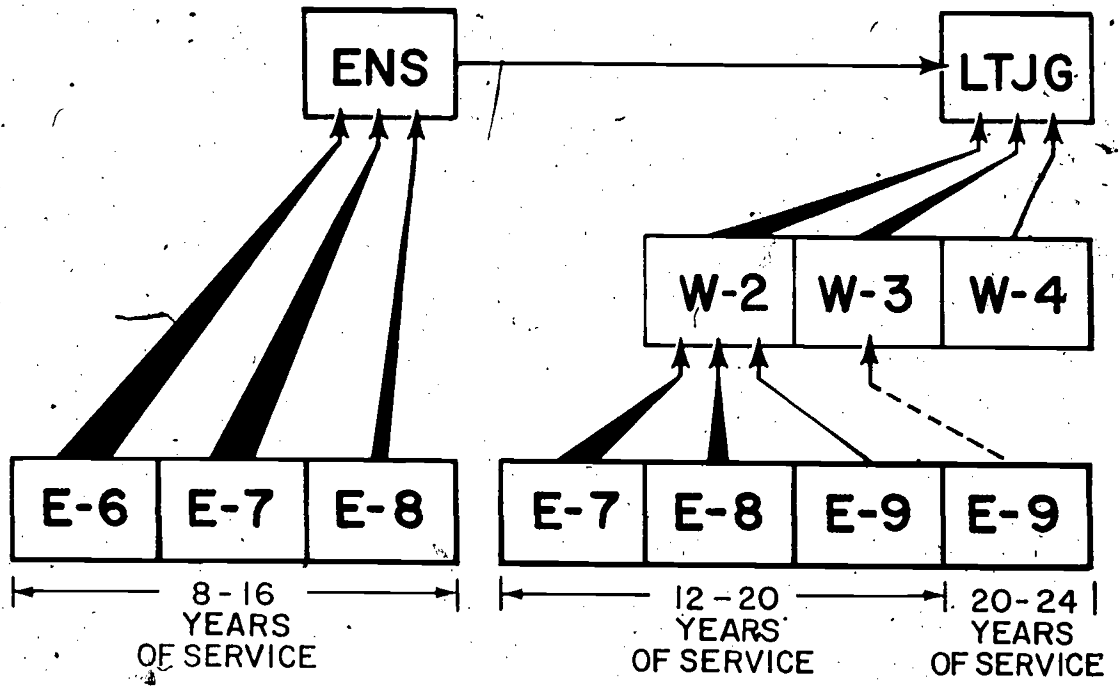

195.207

Figure 1-4.—LDO/WO career paths.

Information Booklet, NAVPERS 15176, for aviation.

Eligible applicants for the Warrant Officer and Limited Duty Officer program will be considered by a selection board. The board will recommend those deemed best qualified for appointment within authorized quota limitations.

Competition in both of the programs has been and will continue to be particularly keen, and personnel should commence preparation early in their careers. Increased knowledge by on-the-job training and specialized training through schools and correspondence nonresident career courses should be sought by all potential candidates to better prepare for officer status.

METRIC SYSTEM

The Metric System Single-Subject Training Manual and its associated OCC-ECC form a self-study package (NAVEDTRA 475-01-00-75) to train Navy personnel in conversion from the U.S. Customary System to the International System (SI). Order the SSTM by stock number 0507-LP-475-0000 from NPFC, Philadelphia, PA. and the OCC-ECC by NAVEDTRA 475-01-00-75 from NAVEDTRAPRODEVCEN, Pensacola, Florida, 32559.

CHAPTER 2

SUPPLY AND PUBLICATIONS

To have an effective aircraft maintenance program, the availability of spare parts and equipment is of prime importance. Without material the maintenance of an electrical system cannot be sustained. The roles of supply and maintenance and the responsibilities of each must be clearly understood by personnel at all levels.

In general, maintenance personnel have the responsibility to make known their requirements to supply. Supply personnel convert this demand to the proper format and obtain the required item. No attempt is made here to present a comprehensive study of the supply system. This chapter is to acquaint the AE with the aviation supply system to the extent that he should be able to understand what is required of him and the effects his actions have upon the supply support. Most emphasis is placed on local organization where the AE, as the ultimate consumer, is primarily involved. A brief discussion of the supply system is presented in an effort to familiarize the senior AE with basic supply principles used to provide his material requirements.

AVIATION SUPPLY

Aviation supply personnel are vital members of the aircraft maintenance team; and the AE, as well as other aviation maintenance ratings, must work in close harmony with them if successful teamwork is to be achieved. The team must work so that a flow of materials is maintained from the manufacturer to the man on the job. A correct concept of supply's relationship to the entire organization is essential in the supervision of aviation maintenance functions.

ORGANIZATION AND FUNCTION

The command exercising management control over the policies and procedures of the aviation supply organization is the Naval Supply Systems Command. The Commander of the Naval Supply Systems Command is usually a rear admiral. He works with the delegated authority of the Secretary of the Navy, and all orders emanating from him have the full force and effect of SecNav orders.

To better understand the relationship of the Naval Supply Systems Command to the Aviation Supply System, it might be well to quickly review the development of the Navy Supply System.

Prior to the establishment of the Aviation Supply Office (ASO), aircraft spares were bought by the naval bureaus, naval air stations, and the Naval Aircraft Factory as they were needed. This system, though efficient enough before World War II when aircraft component parts were few, was too loosely organized for the great expansion of the Navy's aircraft program that followed the fall of France in 1940.

ASO was established in 1941 under the technical control of BuAer and the management control of BuSandA. The function of ASO was the procurement, custody, and issuance of aeronautical spare parts and technical material.

Today, ASO supports approximately 8,500 aircraft. The aircraft have changed; the methods of controlling their spare-part support have changed. But ASO's mission today is the same as it was during World War ~~II—to ensure that the~~ Navy's aircraft have the right parts, in the right quantities, in the right place, and at the right time. ASO is now under the technical control of the Naval Air Systems Command and the management control of the Naval Supply Systems Command.

RESPONSIBILITIES OF THE NAVAL MATERIAL COMMAND

The Chief of Naval Material (CNM) is responsible for providing the material support needs of the operating forces for equipment, weapons or weapons systems, materials, facilities, and supporting services. He also formulates and effectuates policies and methods of procurement, contracting, production of materials, and of procurement and contracting services throughout the Navy. CNM heads five principal subordinate commands. Two of these commands are concerned with aviation supply and are discussed below.

Naval Supply Systems Command (NAVSUP)

NAVSUP is responsible for supply management policies and methods and provides ASO with the following:

1. Command guidance and supply system policy.
2. Operating funds for civilian salaries, office equipment and supplies, and travel.
3. Navy Stock Funds for financing procurement of consumable aeronautical spares.

Naval Air Systems Command (NAVAIR)

NAVAIR is responsible for Navy and Marine Corps aircraft, and airborne weapons systems, and other aviation-related equipment, and the systems integration of aircraft weapon systems. NAVAIR provides ASO with the following:

1. Technical guidance.
2. Weapons systems program data.
3. Funds for the procurement of aeronautical repairables.

Aviation Supply Office (ASO)

The ASO is the primary Navy Inventory Control Point responsible for material support of the Naval Aviation Maintenance Program with respect to technical aviation material. Such material consists of spares and spare parts for aircraft and engines, and for avionics, electrical, accessory, safety, ground support, aeronautical photographic, and meteorological equipments. The ASO's responsibilities include, but are not limited to, the following:

(1) The computation of aviation requirements in both range and depth. This responsibility includes conducting and coordinating provisioning conferences, and the identification and transfer of items to be managed by DSA (Defense Supply Agency) and other cognizant ICPs.

(2) The budgeting and funding of all assigned aviation material requirements.

(3) The procurement of material directly from industry or via other government agencies.

(4) The allocation of NAVAIR procured materials to stock points; the distribution of material to fill replenishment stock requirements; and the referral of requisitions to stock points to meet end use requirements.

(5) The disposal of materials that are in excess of system requirements.

(6) The maintenance of aeronautical spares and spare parts catalogs. The catalog function includes obtaining National Stock Numbers from the Defense Logistics Systems Center.

(7) The determination of system asset rework requirements of repairable components to be processed by Naval or commercial rework facilities.

(8) The development, issuance, and updating of initial outfitting, allowance, and load lists applicable to the NAMP.

APPROPRIATIONS

At one time or another, almost everyone has had the frustrating experience of not being able to draw from supply some item that he thought necessary to have immediately; the usual reason given being, "We don't have any money left." It takes only a short time to realize that the Navy does not operate with unlimited funds. This section and the following section, titled "Allotments," are presented to further an understanding of the system whereby funds are made available at the user activity level for operating expenses.

The main money pool of the government is the General Fund of the Treasury. Funds come into the General Fund from such sources as income taxes, excise taxes, import-export taxes, etc. The only way for money to be expended from the General Fund is by congressional action, which has to be approved by the President. A bill passed by Congress which authorizes the expenditure of funds from the General Fund is called an appropriation.

An estimate of the amount of money required for the operation of the Defense Department during a given fiscal year is prepared by Department of Defense fiscal experts well in advance of the beginning of the fiscal year. The Congress studies the proposed budget in the light of world affairs, the current domestic economy, and such other considerations as they see fit, then acts upon it. They may increase the amount requested, decrease it, or pass it as submitted. After presidential action is completed, the money is made available to the Department of Defense to be spent during a specified year. This is known as an "annual" or "1-year" appropriation.

Congress and the President may also approve "no-year" appropriations for special projects such as large construction over an unspecified length of time. Another form of appropriation is the "multiple-year" appropriation for projects which will be completed in a predictable length of time. An example of this type of appropriation might be the money appropriated to cover the expenses of the NROTC college programs for the next 4 years.

The appropriation by which the AE is most affected is the current year appropriation. After the appropriation or expenditure authorization is received in the Department of Defense, it is prorated among the services as a percentage of their previously submitted budget estimates. The Navy's share is prorated among the various bureaus and commands in essentially the same manner; that is, as a percentage of their estimated requirements for the coming fiscal year. The money to be spent for naval aviation is made available to the Chief of Naval Operations. Here, part of the money is allocated to ASO for the purchase of aircraft spare parts in quantities which past usage data has indicated will probably be sufficient for the coming year. These spare parts are furnished to the operating activities at no cost since their usage has been anticipated and the items paid for in advance. The account from which money was spent to buy these items is known as the Appropriation Purchase Account (APA). Material received in the user activities from this account is known as APA material.

Another part of the Chief of Naval Operations' funds is made available to the operating activities in the form of operating budgets.

OPERATING BUDGETS

Budgets concerning naval aviation are authorizations by the Chief of Naval Operations to the user activities to spend a certain amount of money during a given length of time for specified purposes. User activities are shore commands which operate aircraft, and the major air type commanders. Major air type commanders are Commander, Naval Air Force, Atlantic (COMNAVAIRLANT); Commander, Naval Air Force, Pacific (COMNAVAIRPAC); and Chief of Naval Air Training (CNATRA). Operating funds for squadrons and units are apportioned to them by their type commander as an Operating Target (OPTAR). Routine nonaviation expenses for operating squadrons and units are absorbed by the ship or station to which assigned.

Flight Operations Budgets

Major air type commanders and shore commands which operate aircraft are furnished this budget by the Chief of Naval Operations. The OPTAR provided to fleet squadrons and units by their type commanders is a quarterly segment of these funds. Unused funds revert to the control of the type commander as each new OPTAR is authorized. Type commanders provide OPTARs to all squadrons and units under their operational control, whether or not the user activity is based ashore. Shore station commanders have no responsibility for providing money for the operation and line maintenance of aircraft of tenant fleet activities.

Funds allotted for the flight operation of aircraft are used only in direct support of the actual flight of the aircraft. By far the greatest expenditures against this budget are for fuel and oil. Other materials that may be purchased with this fund include crewman's flight clothing, liquid oxygen (LOX), and squadron administrative consumable office supplies.

Aviation Fleet Maintenance Budget

Air type commands are furnished this budget by the Chief [illegible] Naval Operations, then the air type command furnishes funds to ships by OPTAR. These funds are provided to finance the cost of intermediate and organizational levels of maintenance. These costs include the following:

1. Technical repair parts, common hardware, lubricants, cleaning agents, cutting compounds, metals, etc., incorporated into or expended in the performance of aviation maintenance of aircraft, aircraft engines, aeronautical components and subassemblies, and Navy maintenance of the Naval Air Systems Command authorized maintenance support equipment.
2. Fuels and lubricants consumed by aircraft engines during engine build-up, change, or during maintenance.
3. Preexpended, consumable maintenance material.
4. Replacement of consumable/expendable allowance list items.

MATERIAL IDENTIFICATION

Aviation maintenance personnel work closely with the aviation storekeepers in keeping aircraft in an "up" status. In order to obtain replacement parts as rapidly as possible, you must know how to determine the source of supply of different items. For example, you may waste many hours trying to find out that the item is to be manufactured within your own activity. Also, it is important to know the correct stock number and cognizance symbols used to requisition items from supply.

The cataloging system developed by the Department of Defense is such that it identifies with one name and stock number any item of supply that is carried in any or all government agencies. In the procurement of material it is normally necessary to identify your material requirement in the medium understandable to the supply system.

NATIONAL STOCK NUMBERS

Prior to 1952, each of the services had its own numbering system for identifying, cataloging, stocking, and issuing items of military supply. It was not unheard of that one service would be negotiating on the open market for an item that was held in surplus by another service under its own stock number. This confusion resulted in the passage in 1952 of the Defense Cataloging Standardization Act.

Implementation of the Defense Cataloging Standardization Act has resulted in a reduction of item duplication between the services by providing for one stock number for each item, regardless of the use of the item or the using activity.

The standardized numbering system was intended to create and improve standardization of items of military supply in servicewide use and reduce excess inventories which, for the most part, were caused by lack of standardization. Also, reduction of excess inventories eliminates much financial loss due to material obsolescence.

Originally these stock numbers were known as Federal Stock Numbers (FSN), but were changed to National Stock Numbers (NSN) in 1974 in order to comply with item identification requirements of the Status of Forces Agreement of the NATO members.

NOTE: While reference in this chapter is made only to the military application, it should be noted that the National Stock Numbering System is the prime numbering system for all federal agencies.

Types of Stock Numbers

In the Navy, ASO uses National Stock Numbers with prefixes composed of 1, 2, or 3 symbols, and suffixes composed of 2 characters which may be all letters or a combination of letters and numbers. When the prefixes and

Table 2-1.—Breakdown of a Coded National Stock Number

2 RHF 1560-123-00-4567-BF

2R	H	F	1560	00-123-4567	BF
Cognizance Symbol	Material Control Code	Material Condition Code*	Federal Supply Classification Code (FSC)	National Item Identification Number (NIIN)	Special Material Identification Code (SMIC)

*These codes will not appear in the Federal Stock Catalog; they are used only for material turn-in.

suffixes are used, the stock number becomes a Navy Coded National Stock Number. (See table 2-1.)

When the first prefix symbol is used, it designates the command or office having control or cognizance of a particular item. Some of the more common cognizance symbols, together with the type material controlled and the cognizant command or office, are listed in table 2-2.

Many variations of coded stock numbers will be encountered in field maintenance work. These variations indicate material management responsibilities for the item; flag certain items as recoverable, consumable, high value, etc.; and identify the condition of the material if it is not ready for issue.

Because the variety of codes is so extensive and the trend to single service management of items has caused so many changes in recent years, a list of codes that might be prefixed or suffixed to a stock number would not be appropriate for this manual. The primary things to keep in mind are that the basic stock number, consisting of four groups of numerals, identifies the item from a technical point of view, and that the other codes identify material management characteristics.

STANDARDIZATION OF ITEM NOMENCLATURE

The assignment of names of stock items is as important as the assignment of National Stock Numbers. When items are inducted into the supply system, official government nomenclature must be assigned. Often this item name plus additional descriptive data will differ from names of items previously used. If difficulty is experienced in locating a familiar item in the catalog, it is quite possible that the name has been changed to conform to a more general usage. For instance, it will be found that a "swab" is a small stick with a tiny wad of cotton on one end, and is used by the Medical Department. In order to clean the decks it will be necessary to think of another name for "swab." Now, "mops" will be found listed, together with the correct National Stock Number. Other examples are as follows: "Ceilometer" becomes "Projector, Cloud Height"; "Zipper" has become "Fastener, Slide Interlocking," etc.

MATERIAL IDENTIFICATION AIDS

There may be times when a part or some technical material is needed and the stock number is unknown. At other times some material may be on hand and its identity not

Table 2-2.—Cognizance symbols

Symbol	Cognizant activity	Material controlled
0I	Naval Publications and Forms Center.	Publications.
1I	Naval Publications and Forms Center.	Forms.
1R	Aviation Supply Office.	Consumable aeronautical material.
2G	Navy Ships Parts Control Center.	Electronic repairable parts to support Naval Air System Command equipment.
2R	Aviation Supply Office.	Repairable aeronautical material.
2V	Naval Air Systems Command.	Aeronautical support equipment.
8R	Naval Air Systems Command.	Major aeronautical systems and equipment.
9G	Navy Fleet Material Support Office.	Navy-owned stocks of defense general material.
9N	Navy Fleet Material Support Office	Navy-owned stocks of defense electronics material.

positively known. A knowledge of the several methods by which material may be identified is very helpful in speeding the completion of a maintenance task. There are many ways material may be identified. Certain data may be available which does not identify an item but may lead to positive identification. An aircraft part has a part number. The part number may be looked up in the IPB and identified by nomenclature and often by the stock number. If the stock number is not furnished in the IPB, it may be found by referring to Cross-Reference Section C0006 of the Navy Stock List of ASO.

Some equipments have attached nameplates which provide such information as the manufacturer's name, make or model number, serial number, size, voltage, phase, etc. Identification data taken from the namplate of the old part can be very helpful in procuring a replacement.

When only the description of the item is known, the best source for identification is the descriptive sections of the various Navy Stock Lists.

Various publications used in identifying material are described in the following paragraphs.

NAVSUP Publication 2002

NAVSUP Publication 2002, Navy Stock List of Publications and Forms, is now in the microfiche form consisting of three sections as follows:

I. This section lists publication and form numbers in ascending alphabetic/numeric sequence cross referenced to a basic stock number with title/nomenclature and revision date. After obtaining the stock number in this section, refer to section three for additional information.

II. This section lists publications and forms by title/nomenclature cross referenced to a basic stock number.

III. This section lists publications and forms by stock number. NAVAIRSYSCOM Technical Directives are listed in this section immediately following the stock number listing of publications and forms.

The publication entitled *"Introduction to Navy Stock List of Publications and Forms"* should be consulted when using the 2002 listing. It furnishes requisitioning instructions for various forms, publications, and placards, and provides the necessary codes to be used when looking up technical directives.

Illustrated Parts Breakdown (IPB)

Illustrated Parts Breakdown lists are probably the most important tool for identification of aeronautical material. As a senior Petty Officer, you are undoubtedly familiar with them. However, due to the importance attached to them as a material identification source, they are discussed briefly in the following paragraphs.

IPBs are compiled by the manufacturer for each aircraft model in naval use. IPBs are also available for aircraft engines, individual accessories, and equipments.

IPBs for an aircraft may consist of only one volume, as with the T34 aircraft, other IPBs may consist of several volumes. Significant variations in format of IPBs makes it necessary for one to become thoroughly familiar with the IPBs pertaining to the aircraft/equipment he is maintaining.

The IPBs pertaining to the S3 aircraft (NAVAIR 01-S3AAA-4 Series), consisting of fifteen separate volumes, is cited as an example of the vast amount of information available on parts within modern weapon systems.

The first manual in the series, 4-1, contains the Introduction; it also contains the Numerical and Reference Designation Indexes. A thorough understanding of this section is a must in order to become proficient in the use of the system IPBs. Some of the information presented in this section is as follows:

I. The Introduction provides helpful information on using the Index and the various IPBs. This includes information on Source, Maintenance, and Recoverability (SM&R) codes, usable on codes, and other codes used throughout the manuals.

While you might find it difficult to remember all the various codes, it is certainly necessary that you know where to find them and how to apply their usage to your particular aircraft/equipment. A partial listing of SM&R codes is found later in this chapter. Ordering a part with a source code of MG would be a waste of time since it is supposed to be manufactured within IMAs. Likewise, a part ordered without consulting the "usable on codes" could be received as an improper replacement for the aircraft concerned.

II. Numerical Index of Part Numbers. This is an alphanumerical list of all part numbers in the fourteen system manuals. Each part is cross referenced to a publication number and figure/index number. The applicable SM&R code is also provided here.

The remaining volumes of the S3 IPBs are aircraft system oriented, excluding the 4-15 entitled Ground Support Equipment. It provides a list of special and miscellaneous tools, and handling and test equipment to be used with the S3 aircraft.

AERONAUTICAL ALLOWANCE LISTS

Aeronautical allowance lists are 'lists of equipment and material, known or estimated to be required, to place and maintain aeronautical activities in a material readiness condition. These lists contain substantially all items used with sufficient frequency to justify their issuance to all activities maintaining aircraft or equipment for which the lists are designed. They also contain information concerning stock number, nomenclature, interchangeability, and supersedures. Keep in mind that allowance lists normally contain support equipment allowed to maintenance personnel consistent with their assigned level of maintenance. Initial outfitting lists contain material of a spare parts nature required for maintenance of aircraft/equipments. Materials listed in the initial outfitting lists are normally held in supply stocks and, under most conditions, are not authorized shop spares.

Publications listing equipment and material required for performance of specific functions are known as Tables of Basic Allowance. They contain both shop equipment and common supporting spare parts. They cover allowances of tools and equipment required for use by such activities as Fleet Marine Force squadrons and guided missile activities.

Aeronautical Allowance Lists are reissued in accordance with reissue cycles established by the Naval Air Systems Command, or sooner, if required. Interim to reissues, the lists are maintained current by letters and by the issuance of Change Pages and Change Bulletins. Change Bulletins, which are official publications, are issued by ASO on a periodic basis. They are numbered in consecutive numerical sequence within each calendar year, and are distributed to holders of allowance lists. For further information on the various allowance lists consult the Material Management chapter of OPNAVINST 4790 (Series).

MATERIAL REQUISITIONING

Maintenance personnel are apt to encounter a variety of local requisitioning channels, all designed to present a demand for an item to the supporting supply department. Assigned levels of maintenance, geographical location of shops relative to supply facilities, and mission of activities requiring support all influence the local requisitioning channels. Local instructions normally promulgate detailed procedures for submitting your demand to the appropriate supply point.

SUPPLY FUNCTIONS

The mission of the supply activity is to support the operational and maintenance efforts of the activity/ship. Stocks of aviation oriented material carried are tailored and replenished to this end. Positioning replenishment, and control of stocks of material in maintenance areas are carried out as a result of joint decisions by the Supply and Maintenance Officers concerned. They determine the range, depth, and related procedures. The Navy Maintenance and Material Management System (Aviation) requires that the cost of material used in maintenance be determined and accumulated in such manner and detail that weapons system costing can be measured. Usage is finely defined as to stock number, within component, within system, within equipment/weapon/aircraft, in a particular squadron, located in a specific operational area, at a definite point in time. These data are used as an inventory management tool to determine geographic and strategic distribution of stocks of material. In addition, the data will be invaluable in establishing the material portions of work standards in maintenance.

Material requirements of a work center are made known to the Material Control Center (MCC) within the organization. This requirement is forwarded from the MCC to the Supply Support Center (SSC) which responds to all material requirements of the maintenance organizations. The SSC is an internal organization of the local supply activity. It is made up of two sections—the Supply Response Section and the Component Control Section. Supply support is available consistent with the operating hours of the maintenance activities supported. If maintenance is being performed 24 hours a day, then supply support is available 24 hours a day.

The Supply Support Center maintains rotatable pool material which consists of repairable ready-for-issue items reserved primarily to satisfy the requirements of organizational level maintenance. Defective components are turned in to intermediate maintenance for repair. The defective components repaired to an RFI condition are then returned to the rotatable pool to replace the components previously issued.

Low value, fast moving consumable items are preexpended from supply. Such materials are located in the maintenance area; and the establishment, maintenance, and replenishment of preexpended bins are the responsibility of the supply organization.

Supply Response Section

The Supply Response Section (SRS) is responsible for preparing all necessary requisitions (DD Form 1348) and related documents required to obtain material for local maintenance use in direct support of weapon system maintenance. Material control of the maintenance organization notifies the supply organization of the need of such material. When material is available locally, the time frame for processing and delivery is as follows:

Priority	Process/delivery time
1-3	1 hour
4-8	2 hours
9-15	24 hours

Delivery time varies for materials that are not on the station. The important point is to have a systematic followup procedure for all material on order. Should the anticipated delivery time be too long, or the order cancelled, other arrangements must be made to acquire the needed material.

The SRS is responsible for receipt, and issuance of all ready-for-issue pool components. It is responsible for physical delivery of RFI material to maintenance organizations, and the pickup of defective components from the organizational maintenance activity, and subsequent delivery to the intermediate maintenance activity. Actual maintenance personnel are not involved in the physical movement of material between organizations.

This section also performs technical research in regard to completion of requisition documents as well as determining the status of outstanding requisitions and relaying this status to the customer.

Component Control Section

The Component Control Section (CCS) accounts for all components being processed in the intermediate maintenance activities. This section also maintains records on the status of all rotatable pool components. In addition, the CCS is responsible for initiating disposition action on components that cannot be repaired by the local intermediate maintenance activity. Using listings and directives from inventory managers, screening personnel determine disposition of components in question, including prospective consignee and packaging and preservation requirements, prior to movement of material.

MATERIAL CONTROL FUNCTIONS

Material control serves as the single point of contact within the maintenance organization for the conduct of business with the supply organization.

When an organization is in need of a component, the production work center requesting the material furnishes identification of the required item in the form of a part number and manufacturer's code from an IPB or other technical reference. The request is forwarded through maintenance control for assignment of a priority indicator and project code. Then the request is passed to material control, and forwarded to the SSC.

Material control provides material support to the cognizant organization by:

1. Ensuring that maintenance requirements for parts and material are properly forwarded to the SSC in a timely and continuous manner to prevent work stoppages and aircraft groundings.
2. Ensuring that parts and material received are expeditiously routed to applicable work centers and are not allowed to accumulate.
3. Establishing delivery/pickup points for all material as mutually agreed on by Supply and Maintenance Officers.
4. Maintaining liaison with the supporting SSC on maintenance material matters to ensure that material needs of the organization are satisfied.
5. Preparing documents for materials required for operational support of weapons systems (i.e., material chargeable to funds such as aviation fuel, lube oil, flight clothing, etc.) and material carried in SERVMART/JETMART (Service/Jet Market) outlets.
6. Furnishing technical advice and information to the supply activity on the identity and quantity of supplies, spare parts and materials.
7. Establishing procedures to ensure periodic inventory of tools and adequate accountability of material and equipment in custody.

8. Initiating surveys in the event of loss, damage, or destruction of accountable material.
9. Keeping Maintenance Control advised of the overall supply situation and its effect on maintenance.

10. Performing memorandum and/or OPTAR (Operational Target (Funding)) accounting, charting, and budgeting of costs.

11. Establishing procedures to ensure proper operation of tool rooms and the custody/control of accountable items.

12. Maintaining inventory control of authorized allowances of material listed in the IMRL and authorized allowance lists.

13. Verifying NORS/NFE requisitions daily and maintaining current records on the status of same.

14. Maintaining an inventory (with technical assistance) of aircraft upon receipt or transfer, and ensuring that inventory log entries are made and that inventory shortage listings are prepared and forwarded to Maintenance Control for inclusion in the aircraft inventory record. (Applicable to OMA only.)

15. Maintaining control/records to ensure the turn-in of defective components within established time frames.

Some functions applicable only to the intermediate level of maintenance are listed in the following paragraphs.

Intermediate Level

An Administrative Screening Unit has been established in Material Control of intermediate maintenance activities. This screening unit does the following:

1. Positively identifies material and determines if it is within the repair capability of the Aircraft Intermediate Maintenance Department.
2. Ensures that all required documentation is affixed to the component (i.e., logs, records, VIDS/MAF, etc.).
3. Notifies maintenance/production control of the receipt of defective components for scheduling into the AIMD.
4. Transfers the defective components to the appropriate work center when directed by maintenance/production control.

All components received in the AIMD material control receive screening to determine if the item is within the check, test, or repair capability of the AIMD. As a result of this screening, components requiring maintenance within the AIMD capability are reported to maintenance/production control as ready for induction. Items beyond AIMD capabilities are returned to the Supply Support Center with appropriate recommendations for disposition. When work on components in the AIMD has been completed, the components, together with required records, are returned to Material Control for appropriate routing.

MILSTRIP

The Military Standard Requisitioning and Issue Procedure (MILSTRIP) and Uniform Material Issue Priority System were developed by the Department of Defense. They provide a common supply language and more effective supply system operations within the military establishment. This system standardizes forms, formats, codes, procedures, and the priority system.

MILSTRIP employs two forms for the requisitioning and issuing of material. The Single Line Item Requisition Document (Form DD 1348) is the basic request document submitted to the applicable supply echelon for material requirements. The issue document is the Single Line Item Release/Receipt Document (Form DD 1348-1), which is also used to return RFI material to the supply system. These forms will be prepared by the Supply Response Section of supply for all material requested in direct support of weapon system maintenance, and by Material Control for material requested in indirect support of weapon system maintenance.

Uniform Material Movement and Issue Priority System (UMMIPS)

In this system, the priority designator is determined by a combination of factors. These factors relate the military importance of the

Table 2-3.–Priority number chart

Force/ Activity Designator	A Unable to perform	B Impairs capability	C Routine
I Combat	1	4	11
II Positioned	2	5	12
III Ready	3	6	13
IV Reserve and support	7	9	14
V Others	8	10	15

requisitioner (force/activity designator) and the urgency of need or end use (indicated by an urgency-of-need designator). The force/activity designator (FAD), (a Roman numeral I-V) is assigned by the Joint Chiefs of Staff (JCS), Chief of Naval Operations (CNO), and Navy commanders.

Every activity is assigned 1 of 5 force/activity designations according to its military importance. (See table 2-3.) These designators are as follows:

I - COMBAT–The highest order of military importance. This designator is not normally used in peacetime unless approved by the President or the Joint Chiefs of Staff.

II - POSITIONED–United States combat, combat ready, and direct combat support forces deployed outside CONUS in specific theaters or areas designated by the Joint Chiefs of Staff, and those CONUS forces being maintained in a state of combat readiness for immediate (within 24 hours) deployment or employment.

III - READY–All other United States combat ready and direct combat support forces outside CONUS not included under designator II.

IV - RESERVE AND SUPPORT–U.S. active and selected reserve forces planned for employment in support of approved joint war plans. This category includes training units and units in training for scheduled deployment.

V - OTHERS–All units not otherwise assigned, including administrative/staff type units.

The FAD is correlated with an urgency of need of a material requirement to determine the priority assigned to requisitions. For example, FAD II activities can submit priority 2, 5, or 12 requisitions for material, depending on the urgency of the requirement as related to mission readiness, while FAD III activities would submit priority 3, 6, or 13 requisitions for corresponding requirements.

The priority assigned to individual material requisitions is assigned by maintenance control in accordance with the military importance and the urgency of need of the item. Abuse of the priority system dilutes the effort that the supply system can devote to units directly involved in combat. Instructions for the assignment of FADs are promulgated by OPNAVINST 4614.1 (Series) are implemented by Fleet Commander and Support Commander instructions.

The urgency-of-need designator (an alphabetical A, B, or C) is determined by maintenance control in the requisitioning activity, with certain exceptions. These two factors (FAD and urgency-of-need) enable the requisitioning activity to determine the UMMIPS priority designator (arabic numeral). Refer to table 2-3.

PARTS KIT

Supporting items and material for the maintenance, repair and rework of selected aeronautical repairable items are procured, stocked, requisitioned, accounted for, and used on a kit basis as a one-time item. Items included in parts kits are procured in accordance with the definitions outlined below. The term parts kits, as used herein, should not be confused with change kits which are procured and issued to perform a one-time modification of an item. Definitions for parts kits codes are described below.

C Kit—Cure-Dated Component Kits

Applied to kits that contain cure-dated items such as diaphragms, packings, and O-rings. A C kit may also contain soft goods not subject to age controls, such as gaskets and seals, and metallic items such as screws, nuts and washers. Any metallic item placed in a C kit is not duplicated in the D kit. When mixed categories of cure-dated parts are packaged in a single container, the control or cure-date of the package is that of the oldest cure-dated part contained therein. Also, the range of cure-dated items does not exceed one calendar quarter. Age of C kits is expressed in calendar quarters. Kits are considered to be a calendar quarter older only after expiration of a given calendar quarter. When cure-dated kits become overage due to the expiration of the storage limitations, the kit is administratively disposed of as excess material.

D Kit—Overhaul Kit

Applied to kits that provide hardware repair parts required at the time of overhaul and that are available only to activities authorized to perform major overhauls. Does not contain cure-dated items.

F Kit—Fleet Kit

Applied to kits that provide items to be replaced at organizational levels of maintenance. These kits are available to activities authroized to perform organizational or higher level repair; this includes major repair activities in support of fleet maintenance. Replacement of F kit parts normally does not require special tools or equipment. F kits do not contain cure-dated items.

Part numbers for applicable parts kits for intermediate and organizational maintenance are listed in the Illustrated Parts Breakdown and the Maintenance Instructions Manual. Components of kits are additionally identified in the Illustrated Parts Breakdown by a footnote and a symbol appearing to the right in the part number column and indicating which items are furnished in the kit. The Maintenance Instructions Manual utilizes a symbol keyed to the illustration to indicate parts furnished in the kit.

Presence of a new part in an applicable parts kit eliminates the necessity of cleaning, inspection, or rework of the equivalent part removed from the assembly being repaired. Removed parts in this category must be administratively condemned. Removed parts not supplied in applicable kits must be handled in accordance with instructions contained in the Maintenance Instructions Manuals.

Detailed instructions on parts kits are contained in BUWEPS Instruction 4423.8 (Series).

PREEXPENDED BINS

Fast moving consumable items with a unit cost of $25.00 or less may be preexpended. Items having a unit cost exceeding $25.00 may be preexpended with the approval of the commanding officer. In either case the inventory at any one outlet will not exceed an estimated 30-day supply.

Specific items added to or deleted from the bins are determined jointly by the Supply Officer and the Maintenance Officer having cognizance over the shop in which such bins are located.

The quantity of each item preexpended is determined by the Supply Officer based on usage data or expected demands.

Preexpended bins are located in the maintenance area. However, the Supply Officer is primarily responsible for proper management and maintenance of the bins, including display, labeling, and initiating replenishment when required.

The supply department reviews the bins at least biweekly to determine replenishment actions, and corrects any mixing of items.

ROTATABLE POOLS

Rotatable pools consist of a range of selected components maintained by a specific maintenance activity, on custody from the supporting supply department. The items generally carried in the pool are those required to sustain operations where immediate availability is essential. The range and quantity of items to be carried in the pool are subject to the recommendations of the maintenance activity. The items carried should have application relationship to weapons systems supported by the local AIMD, be repairable by the local AIMD, and have an average removal rate of at least one per month. Aircraft wheels, tires, avionics assemblies, propellers, and built-up engines are examples of items that might be included in the pools. The supply department establishes the rotatable pool stock and prescribes detailed procedures for operation and control of the pool.

ACCOUNTING FOR MATERIAL IN USE

Accounting for material does not cease when it is withdrawn from the supply department. It is at this point that the accounting responsibility passes to the applicable maintenance personnel.

AIRCRAFT PARTS

Normally, accounting for aircraft parts drawn to replace similar defective parts is satisfied when the part is installed on the aircraft. No further custodial records are required. Accounting for materials drawn for general maintenance is satisfied when the material is consumed in the authorized maintenance work. In these cases it is actually the removed defective material that requires additional action to ensure its accountability from the time it is removed until it is returned to the supply department.

JOINT SERVICE UNIFORM SOURCE, MAINTENANCE, AND RECOVERABILITY (SM&R) CODES

In 1972 the Navy adopted the Joint Service Uniform SM&R codes. These codes appear in all new maintenance and supply publications; however, some of the older aircraft publications still contain the Navy coding system. So, once again, it is imperative that you be thoroughly familiar with the coding system in the publications you are using.

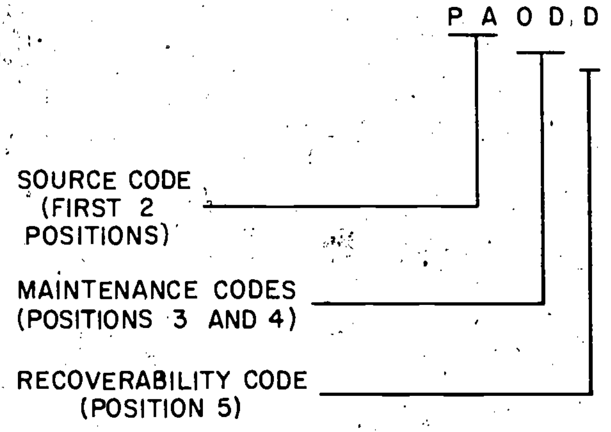

208.272

Figure 2-1.—Component parts of Joint Service Uniform Source, Maintenance, and Recoverability Code (SM&R).

The SM&R codes are five position codes used to identify the source of spares, repair parts, and items of support equipment and the levels of maintenance authorized to use, maintain, overhaul, or condemn them.

Figure 2-1 shows the component parts of the Joint Service Uniform SM&R code. The following paragraphs list these codes.

Source Codes

The first and second positions of the SM&R code indicates the source of the item, e.g., procured, manufactured, or assembled. Some are listed here.

PA — Item procured and stocked for anticipated or known usage that is not deteriorative in nature.

PB — Item procured and stocked for insurance purposes because essentiality dictates that a minimum quantity be available in the supply systems.

PC – Item procured and stocked and which otherwise would be coded PA except that it is deteriorative in nature.

PD – Support item, excluding support equipment, procured for initial issue or outfitting and stocked only for subsequent or additional initial issues or outfittings. Not subject to automatic replenishment.

PE – Support equipment procured and stocked for initial issue or outfitting to specified maintenance repair activities.

PF – Support equipment which will not be stocked but will be centrally procured on demand.

PG – Item procured and stocked to provide for sustained support for the life of the equipment. (The use of this code has limited application in the Navy.)

KD – An item of a depot overhaul/repair kit and not purchased separately.

KF – An item of a maintenance kit and not purchased separately. (Replaced at organizational or intermediate levels.)

KB – Item included in both a depot overhaul repair kit and a maintenance kit.

MO – Item to be manufactured or fabricated at organizational level.

MF – Item to be manufactured or fabricated at intermediate levels afloat.

MH – Item to be manufactured or fabricated at intermediate levels ashore.

MG – Item to be manufactured or fabricated at both afloat and ashore intermediate levels.

MD – Item to be manufactured or fabricated at depot level.

AO – Item to be assembled at organizational level.

AF – Item to be assembled at intermediate level-afloat.

AH – Item to be assembled at intermediate level ashore.

AG – Item to be assembled at both afloat and ashore intermediate levels.

AD – Item to be assembled at depot level.

XA – Item is not procured or stocked because the requirements for the item will result in replacement of the next higher assembly.

XB – Item not stocked. If not available through salvage, requisition. (May result in direction to procure locally.)

XC – Installation drawing, diagram, instruction sheet, field service drawing, that is identified by manufacturer's part number and not stocked in the supply system.

Maintenance Codes

Maintenance codes are assigned to indicate the levels of maintenance authorized to USE and REPAIR support items. The maintenance codes are entered in the third and fourth positions of the Joint Service SM&R code as follows:

Third Position	Removed, replaced, and used at
O	Organization level
F	Intermediate level afloat
G	Intermediate levels afloat and ashore
H	Intermediate level ashore
D	Aviation rework, Avionics and Ordnance Facilities, and Shipyards
L	Designated specialized repair activities

Z	Not authorized to be removed or replaced at any level

Fourth Position	Lowest maintenance level for complete repair
O	Organizational
F	Intermediate level afloat
H	Intermediate level ashore
G	Intermediate levels afloat and ashore
D	Depot level
L	Specialized repair activity
Z	Nonrepairable
B	No repair is authorized. (May be reconditioned by adjusting, lubricating, etc., at the user level.)

Recoverability Codes

Recoverability codes are assigned to support items to indicate the disposition action on unserviceable items. They are entered in the fifth position of the Joint Service SM&R code as follows:

Code	Definition
Z	Nonrepairable item. Condemn and dispose of at the level indicated in column 3.
O	Repairable item. Condemn and dispose of at organizational level.
F	Repairable item. Condemn and dispose of at intermediate level afloat.
H	Repairable item. Condemn and dispose of at intermediate level ashore.
G	Repairable item. Co[illegible] dispose of at interme[illegible]ls afloat and ashore.
D	Repairable item. Condemn and dispose of at depot level.
L	Repairable item. Condemn and dispose of at depot or specialized repair activity.
A	Item requires special handling or condemnation procedures (precious metal, high dollar value, critical or hazardous material).

The SM&R codes are initially assigned during provisioning conferences. As experience and/or item usage develops, originally assigned codes may need to be changed. For example, repeated usage of an item source coded A, M, or X is proper justification for requesting a source code change to the P series. Maintenance activities should submit recommended changes via the UR (Unsatisfactory Material/Condition Reporting) system.

For further information on these codes refer to NAVSUP INSTRUCTION 4423.14 (Series), and NAVAIR INSTRUCTION 4423.3 (Series).

GROUND SUPPORT EQUIPMENT (GSE)

Developing and supervising proper procedures to ensure the maintenance and accountability of GSE is normally a prime administrative function of the electrician. Unlike most aircraft parts, GSE requires the maintenance of custodial records and physical inventories at least annually throughout its in-use life.

A definition of some terms used with GSE is provided in order to give you a clearer concept and deeper appreciation of GSE items. GSE is all the equipment required on the ground to make an aeronautical system, command and control system, support system, subsystem, or end item of equipment operational in its intended environment. This includes all equipment required to install, launch, arrest (except Navy shipboard and shore-based launching and arresting equipment), guide, control, direct, inspect, test, adjust, calibrate, appraise, gauge, measure, assemble, disassemble, handle, transport, safeguard, store, acutate, service, repair, overhaul, maintain, or operate the system, subsystem, and item or component.

Aircraft Maintenance Material Readiness List Program (AMMRL)

The title of the overall Naval Air Systems Command Headquarters (NAVAIR) program which provides the means for effective management of aircraft ground support equipment used for organizational and intermediate maintenance.

Application Data for Material Readiness List (ADMRL)

A data collection which contains a listing, identifying each end item of aeronautical ground support equipment required for intermediate and/or organizational level(s) of aircraft maintenance. Allowance quantities are specified for selected ranges of each aircraft/engine/system for which the end item is required. This data is "stored" in computers and serves as the base (source data) from which appropriate data is extracted for the production of activity IMRLs.

Individual Material Readiness List (IMRL)

A consolidated allowance list specifying end items and computed quantities of aeronautical ground support equipment required for maintaining material readiness of an aircraft maintenance activity. IMRLs are constructed for a specific intermediate/organizational aircraft maintenance activity by extracting those applicable portions of the ADMRL. Each IMRL contains a set of instructions explaining the use and arrangement of the IMRL. The IMRLs are produced by the Naval Air Systems Command Representatives (NAVAIRSYSCOMREPs) upon request of the cognizant Aircraft Controlling Custodian of the activity to be outfitted.

Aircraft Controlling Custodians (ACCs)

Exercise administrative control of assignment, logistic support and employment of aircraft as specified by the Chief of Naval Operations.

End Item

A final combination of end products, component parts, and/or materials that is ready for its intended use, e.g., ship, tank, mobile machine shop, aircraft.

Because stocks of GSE are so costly and limited, issues are strictly controlled by items and quantities as listed in the IMRL of each activity. Each organizational and intermediate level aircraft maintenance activity is responsible for continuous review of its IMRL and submission or recommended revisions to the ACC for appropriate action. Excess aeronautical GSE is of special concern and should be taken care of promptly as follows:

1. On-hand end items which are not considered to be required, whether on an authorized IMRL or not, shall be made the subject of a recommended revision to the IMRL.
2. On-hand end items which are deleted due to receipt of a new IMRL shall be reported by letter to the ACC.
3. On-hand items which exceed the quantity authorized by the IMRL shall be reported by letter to the ACC.

Just as there is no point in having excess GSE, it is equally important to request an addition to the IMRL when needed. The request shall be submitted via the ACC and must contain full justification of the requirement for such equipment.

All GSE must receive continued accountability while in use. The activity having prime custody of the GSE is considered to be the accountable activity. GSE furnished as organizational property is accounted for by the holder of such equipment. GSE furnished or received on subcustody is accounted for by the supporting activity.

Transaction reporting of selected GSE items is sometimes required. ACCs select the items of GSE desired to be reported on a transaction basis and publish appropriate instructions for reporting. (For further information on GSE and the IMRL refer to NAVAIRINST 4420.1 (Series)).

SUPPLY DISCIPLINE

A major responsibility of the electrician is supply discipline which, under operating conditions at sea, sometimes proves to be difficult. However, the impact of sophisticated weapons and attendant high cost requires intensified effort in material management in order to keep the cost of maintenance as low as possible while maintaining a high state of readiness.

The electrician contributes to material management by ensuring that (1) only necessary and proper replacement components are ordered, (2) new components are installed as soon as possible after receipt, and (3) the defective components are turned in to the supply system as soon as possible for repair. This management of material can be aided further by the repair of all components at the lowest level of maintenance having the capability, and the prompt return of the RFI component to the supply system.

When ordering components, the electrician should not over emphasize the urgency-of-need in order to get maintenance control to assign a higher priority than is actually necessary. Abuse of the priority system dilutes the effort of the supply system and wastes time which could be devoted to actual requirements.

By conscientious effort of all supply and maintenance personnel, cost effectiveness and combat readiness can be maintained at desirable levels.

Material in excess of allowance or departmental need should be returned promptly to the supply department. Every attempt should be made to return such material in a ready-for-issue condition. Material returned to supply is documented on DD Form 1348-1, and in some cases, DD Form 1149.

SURVEYS OF EXPENDABLE MATERIAL

Another method of expending material is by survey. A survey is the procedure followed when naval property must be:

1. Condemned as a result of damage, obsolescence, or deterioration.
2. Appraised as a result of loss of utility.
3. Acknowledged as nonexistent as a result of loss or theft, necessitating the expenditure of the accountable material from the records of the holding activity.

The purpose of a survey is to provide a record for the following:

1. An administrative review of the condition of material, the cause of the condition, the responsibility therefor, and the recommendation for disposition.
2. An authorization to expend the material from the records on which carried.
3. An authorization to decrease the monetary value of material in store.

Surveys may be either formal or informal depending on the degree of investigation and control required.

Formal surveys are made by one commissioned officer or by a board of three members, one of whom must be a commissioned officer. Personnel conducting formal surveys are appointed by the commanding officer in each case. The following officers may not serve on a formal survey board:

1. The commanding officer.
2. The officer on whose records the material being surveyed is carried.
3. The officer charged with the custody of material being surveyed.

Whenever a formal survey is not required by regulations or the commanding officer, an INFORMAL survey is used. The head of the department having custody of the material to be surveyed conducts an informal survey.

Survey Procedures

Any person in the Navy who is aware of a material condition that requires a survey may initiate a request for survey. Normally the requests are initiated by a section, division, or department head having custody of the material to be surveyed.

The survey procedure generally consists of the following steps:

1. Request for survey.
2. Action by the commanding officer on the request for survey.

3. Report of survey by surveying officer or board.
4. Action by reviewing authority.
5. Expenditure and disposal action.

- Survey Request, Report and Expenditure, NAVSUP Form 154, is submitted by the originator to the commanding officer via the head of department and (usually) the supply officer.

In routine cases, the initiator of the request may make a recommendation as to disposition of material surveyed. Where a significant amount of money or personal liability may be involved, however, this is better left to the discretion of the survey board.

- Upon receipt of the survey request, the commanding officer or his appointed delegate determines whether the survey should be formal or informal and designates the officer(s) to make the survey. A copy (or copies, as required locally) of the initial survey is then forwarded to the person or group (normally supply) designated as responsible for preparing the smooth survey form. The designated section forwards the smooth survey to the surveying officer or board.

- The surveying officer or board makes a thorough inspection of the material. Condition at the time of survey is determined, or if the material is missing, an examination of the circumstances attending the loss is made. Cause and responsibility are determined, or when responsibility cannot be fixed, a statement is prepared showing why such cannot be done. A full report is made on the survey request in the "Survey Report and Recommendation" block, including the findings as to condition, cause, and responsibility, with a recommendation as to disposition, replacement, or continuance in service.

The survey report is then submitted for review to the commanding officer or the officer ordering the survey if it was ordered by higher authority. When the reviewing officer does not approve of the action of the surveying officer or board, he may cause another survey to be held. In such instances the second survey always is formal. Survey reports normally are not forwarded to higher authority except as directed by current instructions relating to individual items or material categories.

Upon receipt of the properly approved smooth survey document, the supply officer carrying the surveyed material on his records completes the expenditure section of the survey form and takes action to dispose of the material as directed by the survey.

USE OF PUBLICATIONS

As a First Class or Chief Aviation Electrician's Mate, your responsibilities in connection with installing, adjusting, maintaining, and testing electrical equipment will be much greater than they were when you were a lower rated petty officer. You will be required to have quick and accurate answers to many questions. Since there is a wide variety of complex equipment, you cannot expect to have a ready answer to all questions. However, you can become familiar with the published materials that contain the answers, and by so doing you will be able to take positive action.

MAINTENANCE INSTRUCTIONS MANUALS

A Maintenance Instructions Manual (MIM) is developed for each model of aircraft. Recent manuals are issued with the sections as separate volumes to facilitate the use of the manual by the different shops. The sections concerning electric and electronic systems maintenance and wiring data are of prime interest to the AE.

Location of components and instructions for removal and installation are included in the manual. The wiring diagrams, power distribution charts, and drawings showing the location and connection of fuses and circuit breakers are valuable to the electrician while troubleshooting in the aircraft.

Information on electronic equipment maintenance is also included. The amount of this information or the depth of maintenance discussed will vary from one manual to another, and also between equipments within a given manual. Included in some manuals for organization maintenance are operational and functional checks, trouble isolation charts, and adjustment charts. The intermediate maintenance section may contain information for bench checks, troubleshooting, disassembly, repair and parts replacement, and assembly instructions. If special support equipment is needed to accomplish the maintenance described, a section on use and maintenance of this support equipment may be found in the volume on electronic maintenance.

These manuals, when used in conjunction with the Service Instruction Manual for the electronic equipment, furnish the electrician with information needed to properly maintain the equipment.

Format for many of the maintenance instructions manuals, illustrated parts breakdown, etc., are being changed to the maintenance information automated retrieval system which will be discussed briefly in the following paragraphs.

MAINTENANCE INFORMATION AUTOMATED RETRIEVAL SYSTEM (MIARS)

The overall MIARS program involves modernizing the NAVAIR technical manual program by replacing hard-copy manuals with microfilm cartridges containing the same information. This program will significantly reduce storage requirements, streamline change and revision processes, and reduce overall reproduction and distribution cost. Most existing naval aviation technical manuals will be converted to microfilm format during the next few years. Technical manual information for future naval aircraft and related systems will be produced and distributed exclusively on microfilm. The basic element of the MIARS program is the microfilm viewing and hard copy producing equipment which has been specially designed for use in the fleet operating environment.

To be effective in using the MIARS, you must be thoroughly familiar with the microfilm format used in the MIARS on the weapon system/equipment that you are maintaining, and must possess a knowledge of MIARS equipment operation.

NAVAIR 00-500M (a manual publication) contains a listing of the available publications in microfilm format. This publication is prepared in two parts: Part I is a listing of Naval Air Systems Command publications showing microfilm cartridge number; Part II is a listing of MIARS cartridge numbers and their latest film dates. To determine the availability of a publication in microfilm form, locate the publication and its cartridge number in Part I and then refer to Part II for availability status.

EXAMPLE:

PART I

MANUAL NUMBER	CARTRIDGE NUMBER
01-85ADA-2-1	A6.1
01-85-ADA-2-2-4	A6.2
01-85ADA-2-5	A6.3

PART II

CARTRIDGE NUMBER	FILM DATE
A6.1	28 AUG 74
A6.2	28 AUG 74
A6.3	9 JUN 75
S3.7(c)	

NOTE: When no date appears, as with the cartridge numbered S3.7(c) above, it indicates that the publication is NOT available at this time in cartridge form.

The microfilm cartridges (fig. 2-2) are numbered according to a system consisting of alpha-numeric characters that represent aircraft type/design, engine type, level of maintenance, and work unit code identification.

Cartridge numbers starting with A6., TF30., etc., identify publications that are applicable to aircraft and engines, respectively.

Cartridge numbers starting with numbers 1. thru 9. identify publications that are applicable to work unit codes:

Aircraft Basic
2. Power Plants

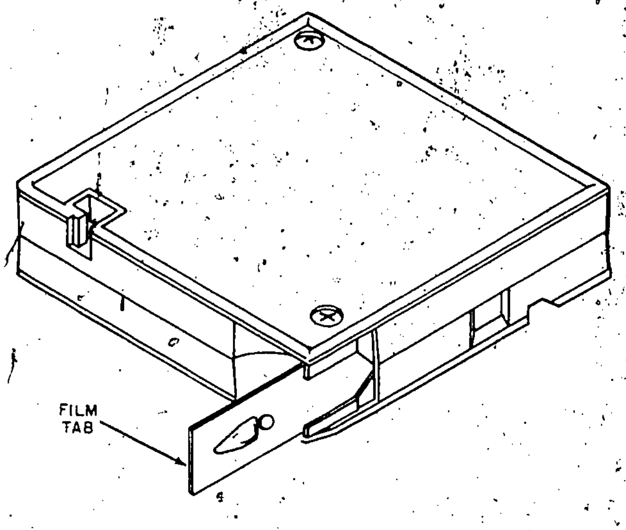

208.273

Figure 2-2.—Film Cartridge.

3. Propellers
4. Utilities
5. Instrumentation
6. Communications
7. Navigation, Bombing Fire Control, Weapon Delivery, ECM and Photographic/Reconnaissance.
8. Missiles/Rockets
9. Miscellaneous Equipments/Systems

Cartridge numbers starting with SE and numbers 1. thru 9. identify publications that are applicable to support equipment work unit codes:

SE1. Servicing Equipment
SE2. Handling Equipment
SE3. Test/Check/Calibrate/Inspection
SE4. Power Generation/Supply
SE5. Flight Reference Test and Check Equipment
SE6. Communications Test and Check Equipment
SE7. Navigation, Weapon Control, Weapon Delivery, ECM, SACE/VAST and General Electronic Test and Check Equipment
SE8. Missile Test and Check Equipment
SE9. Weapon System Peculiar

The level of maintenance is identified by the numbers right of the decimal point:

1-299	Organizational
300-599	Intermediate
600-899	Depot

Confidential cartridges are identified with the letter (c), enclosed in parenthesis, in the right-hand position.

EXAMPLES:

A6.301 (c)

AIRCRAFT — CONFIDENTIAL
SECOND CARTRIDGE
INTERMEDIATE LEVEL

Overflow cartridges are identified with a letter in the right-hand position. This overflow is required when a publication is too large for one cartridge.

EXAMPLES:

A6.43A

AIRCRAFT — OVERFLOW
ORGANIZATIONAL LEVEL

4.608

UTILITIES — DEPOT LEVEL
NINTH CARTRIDGE

SE2.1

SUPPORT EQUIPMENT HANDLING EQUIPMENT — ORGANIZATIONAL LEVEL FIRST CARTRIDGE

Each cartridge contains a table of contents frame listing all NAVAIR numbers of manuals contained in the cartridge, the titles of the manuals, and locations of the manuals within the cartridge by microfilm count number.

The equipment in the MIARS consists of the automatic reader-printer and the portable reader.

The automatic reader-printer (fig. 2-3) will normally be located within maintenance control

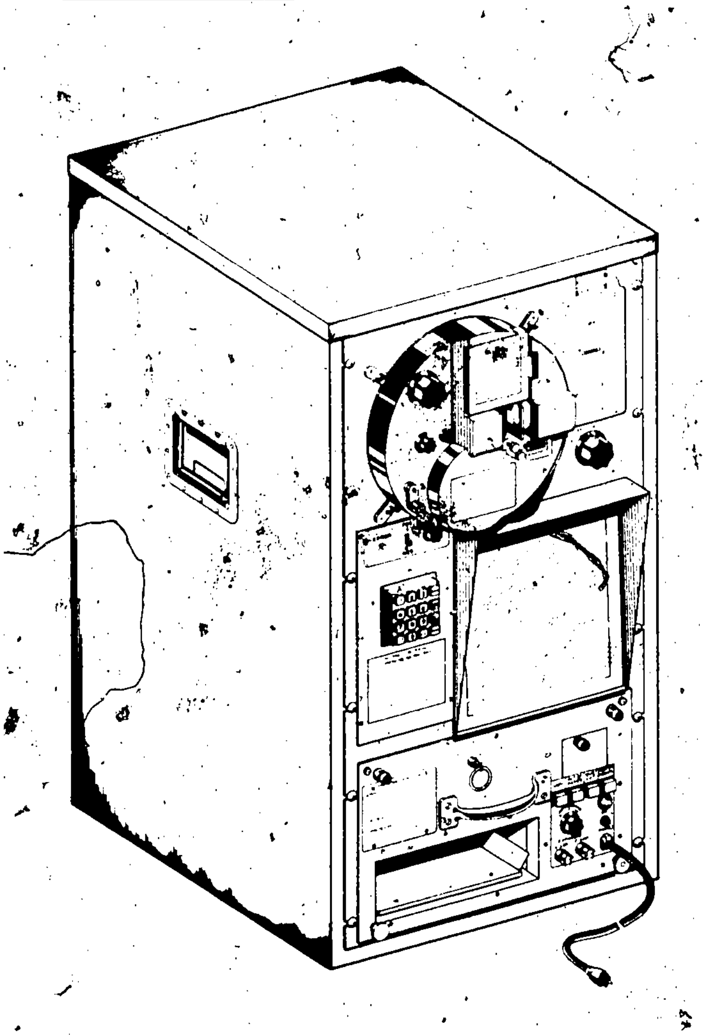

216.239

Figure 2-3.—Auto Reader-Printer.

and/or the technical library of organizational maintenance activities. It can also be located within VAST sites and selected production work centers of the intermediate maintenance activities. Its functions are subdivided into three major sections; (1) film transport and projection, which positions the desired microfilm frame for viewing; (2) frame retrieval, consisting of locating a particular film frame for display or printing as desired; and (3) printing, which consists of making a manual type page copy of a selected film frame. This unit is 19" wide, 36" high, and 24" deep, and weighs approximately 200 pounds. Power requirement is 115v, 60 Hz, single phase.

The portable reader will normally be located in selected locations of organizational maintenance activities, and may be shared by several work centers. It provides the same functions as the automatic reader-printer except for the printing function. This unit weighs 40 pounds, is 16 1/4" wide, 19 1/2" high, and 16 1/4" deep, and can be powered by (1) 115v, 60 Hz, single phase, (2) 115v, 400 Hz, single phase, (3) 12vdc, or (4) 24vdc.

OPERATION AND SERVICE INSTRUCTION MANUALS

The Naval Air Systems Command procures Operation and Service Instruction Manuals for various avionics equipments. The Operation and Service Instruction Manuals may be issued as one combined manual or as separate manuals. In some cases, where the equipment is installed in only one type aircraft, the Maintenance Instructions Manual for that aircraft will contain the information normally found in the Operation and Service Instruction Manuals. The discussion in this course is limited to only a few of the items contained in the manual.

Performance Specifications

As a senior AE, your responsibilities for inspecting the work of others will increase. The Operation and Service Instruction Manual contains charts or sections on standards the equipment should meet if it is to be considered as performing satisfactorily. The use of this information is recommended to determine the quality of your own work or the work of some other AE. The preflight checks given in the manual usually provide only an indication of overall system operation and do not indicate how much above minimum standards each section is operating. There are some equipments that utilize line testers for this check; line testers quite frequently are of the GO, NO-GO type. This is the most basic of the performance standards the equipment must meet.

The preliminary or preinstallation inspection is normally a bench test procedure for equipment received from the supply system or from an intermediate maintenance activity. Normally, this is also a check for overall operation of the equipment and is not designed to check the equipment for specific circuit performance.

The portion of the manual that gives the performance standards for the individual sections of the equipment is titled either "Minimum Performance Checks" or "Specifications." These standards are shop procedures used to check the individual sections of the equipment against the acceptable performance levels. In addition to listing the minimum acceptable performance levels, this section gives procedures for setting up the equipment for test, the test equipment to use, and the adjustments required to bring the equipment up to standard.

Where the equipment fails to meet minimum performance standards, a malfunction is indicated. Trouble analysis charts and alignment procedures are included in the manual to assist the electrician in locating and correcting the malfunction.

Adjustments

The Operation and Service Instruction Manual contains charts and instructions for adjusting the equipment. One of these charts will be found in the organizational maintenance section of the manual. The information given will concern minor repairs and adjustments.

The adjustments given in the field (intermediate) maintenance section are more extensive than those in the section on organizational maintenance. Normally included in this section are the complete alignment procedures for each section of the equipment. The instructions include the step by step procedures and give the test equipment setup required.

Special Tools

The Operation and Service Instruction Manual furnishes a list of special tools required for maintaining the specific equipment. The electrician should check the applicable allowance list to determine whether the tools are available to his unit as organizational property or if it will be necessary to procure them on custody from the supporting activity.

TECHNICAL DIRECTIVES (CHANGES AND BULLETINS)

NAVAIR Instruction 5215.8 (Series) is used in establishing a system to promote uniformity in technical directives. This system is limited to instructions of a technical nature which are not contained in technical manuals and which cannot be satisfactorily incorporated as revisions to the manuals.

NAVAIRSYSCOM technical directives are listed in NAVSUP publication 2002 section III. These are on separate microfilm immediately following the last fiche reflecting stock numbers for publications and forms. To adapt the technical directives to the microfilm concept, the directives have been coded rather than listed by stock number. These codes appear before the directive number and are used ONLY with the microfiche; they are NOT used in ordering, or in the national stock numbering of the directives.

The major codes assigned NAVAIR technical directives are:

01 – General Section
02 – Aircraft/Airframes
04 – Aircraft Target Drones and Guided Missiles
05 – Accessories
08 – Aviation Armament (Aircraft Armament)
10 – Avionics
12 – Photographic Equipment
14 – Power Plant Section
15 – Propeller Section
20 – Support Equipment
25 – Versatile Avionics Shop Test Section (VAST)
30 – Ship Installations
35 – Aircraft Launching
40 – Matting Service

Each major code is further broken down with an additional numeric/alphabetic code which identifies each specific type directive within the major codes. A complete listing of the NAVAIR technical directive codes is found in NAVSUP publication 2002, entitled *Introduction to Navy*

Stock List of Publications and Forms. A typical directive code may be listed as:

02 2Y 62
Aircraft/Airframes — Directive number
C-130 Airframe Bulletins

Technical directives are issued as formal (letter-type) and interim (message-type) directives. A formal TD is a document issued as a Change, or as an Amendment or Revision thereto, and promulgated by letter. An interim TD is a document issued as a Bulletin or Change, or as an Amendment or Revision thereto, and promulgated by message to ensure expeditious dissemination.

A CHANGE is a document comprised of instructions and information which directs the accomplishment and recording of a material change, a repositioning, a modification, or an alteration in the characteristics of the equipment to which it applies.

A BULLETIN is an interim document, comprised of instructions and information, which directs an initial inspection to determine whether a given condition exists, and directs an interim revision to the TM series, if applicable, for continuing inspections. It specifies what action is to be taken if the condition is found or not found.

An AMENDMENT is a document comprised of information which clarifies, corrects, adds to, deletes from, makes minor changes in requirements to, or cancels an existing TD. A maximum of three amendments may be applied to any TD, each remaining in effect until rescinded or superseded by a revision. Amendments may not be used to cancel an amendment.

A REVISION is a completely new edition of an existing Change or Bulletin. It supersedes the original directive or revision and all existing amendments.

Directive Categories

Technical directives are assigned a "category" in accordance with the importance and urgency of accomplishing the work involved. These categories are Immediate, Urgent, Routine, or Record Purpose.

IMMEDIATE ACTION.—This type directive is concerned with problems involving safety which would probably result in fatal or serious injury to personnel, or destruction of (or extensive damage to) property, unless corrected within extremely narrow time limits. Immediate Action directives involve the immediate discontinued use of the aircraft, engine, or equipment in the operational employment under which the adverse safety condition exists. If continued use will not involve the affected component or system in either normal or emergency situations, compliance may be deferred until (but no later than) the next periodic inspection for aircraft and engines, and no later than 120 days from date of issue. These directives are identified by a border of black Xs broken at the top center of the page by the words IMMEDIATE ACTION.

URGENT ACTION.—A directive of this type also indicates a problem in safety conditions which could result in personnel injury or property damage unless corrected. The major difference is that time limits are not quite so close as with Immediate Action directives, but are still narrow. Operating restrictions may or may not be imposed.

The compliance requirement for urgent action directives specify incorporation of the instructions not later than the next regularly scheduled rework or overhaul, or, for that equipment not reworked or overhauled on a regularly scheduled basis, not later than 18 months after issuance of the directive. These directives are identified by the words URGENT ACTION at the top of the first page and a border of black diagonals around the cover page.

ROUTINE ACTION.—A directive of this type is concerned with equipment or procedural deficiencies of a material (mechanical, operational, or tactical in nature) where uncorrected existence could constitute a hazard. Routine cateogry is not assigned to interim changes or bulletins. The compliance requirement for routine and urgent action directives is the same, except those routine directives requiring depot maintenance; they may be deferred if seriously interfering with operational commitments or schedules. These directives are identified by the words ROUTINE ACTION printed at the top of the cover page.

RECORD PURPOSE.–A directive of this type is used when a modification has been completely incorporated by the contractor or in-house activity in all accepted equipment, and when retrofit is not required of repairables in the Navy's possession. Consequently, compliance information is not applicable and shall be indicated as such. These directives are identified by the words RECORD PURPOSE printed in black capital letters at the top center of the first page.

Obsolescent Type Directives

Many directives which were issued prior to the standardization of the directives system are still effective. These include Aviation Circular Letters, Technical Orders, Technical Notes, Aircraft Service Changes, Aircraft Service Bulletins, Electronic Material Changes, Electronic Material Bulletins, and Aviation Instrument Bulletins. Although these directives are no longer being issued, those which have not been canceled or superseded are included in the latest edition of NAVSUP 2002, Section III.

Local Action

Upon receipt of a technical directive, either formal or interim, the directive must be screened by the maintenance activity to determine its applicability to units or aircraft maintained by that activity. If applicable, it is imperative that strict control and documentation procedures be adhered to. These procedures are defined in the current edition of OPNAV Instruction 4790.2.

MISCELLANEOUS PUBLICATIONS

There are a great number of technical publications, other than the maintenance and service instructions, that the AE will find useful in performing his job. This section lists and describes briefly a few of these publications. By including this type of publication in the shop technical library, the supervisor will be providing information that should increase the efficiency of the shop.

Electronics Installation and Maintenance Book (EIMB)

The EIMB has been established as the medium for distributing, in one convenient source, maintenance and repair policies, installation practices, and overall electronics equipment and material handling procedures. It also contains other selected information of general interest to electrical and electronic maintenance personnel.

The EIMB is organized into a series of handbooks to afford maximum flexibility and ease in handling. The handbooks are stocked and issued as separate items so that activities requiring extra copies of any handbook may obtain them with relative ease.

The handbooks fall within two categories, general information handbooks and equipment-oriented handbooks. The general information handbooks contain data which are of interest to all personnel involved in installation and maintenance, regardless of their equipment speciality. The titles of the various general information handbooks give only an overall idea of their data content; a more complete description of each handbook is provided in the General Handbook.

The equipment handbooks are devoted to information on a particular equipment class; they provide general test procedures, adjustments, general servicing information, and field change identification data.

Below is a listing of the EIMB handbooks by title:

HANDBOOK TITLE

(General Information Handbooks)

General

Installation Standards

Electronic Circuits

Test Methods and Practices

Reference Data

EMI Reduction

General Maintenance

(Equipment-Oriented Handbooks)

Communications

Radar

Sonar

Test Equipment

Radiac

Countermeasures

Of particular interest to the AE is the handbook entitled "Test Methods and Practices."

Basic Theory and Application of Transistors, NAVWEPS 00-80T-86

This manual is a basic course in the theory of transistors. It begins with an introduction and fundamental theory of transistors and proceeds with explanations of amplifier fundamentals, bias stabilization, transistor analysis and comparison, audio and tuned amplifiers, wide-band oscillators, pulse and switching circuits, modulation, mixing, and demodulation, and ends with an introduction to additional semiconductor devices.

This manual is especially advantageous to the senior AE who is preparing a program of instruction on this subject for his men. The information is presented in a simplified form to allow maximum coverage of information in a unified manner.

The manual is divided into sections. Each section provides test procedures for a specific type of electrical power equipment. A complete test procedure for one basic model is given. The test procedure for the selected model is the most universal for the specific type of equipment. The basic portion of each section contains the following:

1. Description and leading particulars.
2. Typical test values.
3. Preparation for test, including any necessary inspections, checks, or maintenance operations.
4. Detailed step-by-step test procedures.

The sections of the manual are as follows:

1. Introduction.
2. Test procedures for d-c generators.
3. Test procedures for d-c voltage regulators.
4. Test procedures for a-c, d-c generators.
5. Test procedures for a-c generators.
6. Test procedures for a-c voltage regulators.
7. Test procedures for inverters.

Electronic Circuit Analysis, NAVAIR 00-80T-79, Vols. I and II

This manual is published in two volumes and provides the electrician with reference information on the fundamentals of electronic and electrical circuits. It includes information such as electronics mathematics, d-c and a-c circuits, measuring instruments, transistors, and other electrical and electronic applications.

Reduction of Radio Interference in Aircraft, NAVAIR 16-1-521

The purpose of this manual is to present information which will serve as a guide to the aviation industry and to naval aircraft maintenance activities for achievement and maintenance of the lowest practicable level of radio interference in naval aircraft. It may be used as a guide to enable you to determine the type of interference, to locate its source, and to provide a means for its elimination or suppression. The information is presented under the following headings:

1. Purpose.
2. Types and effects of radio interference.
3. Sources of radio interference.

4. Interference coupling.
5. Basic installation planning for radio interference control.
6. Radio interference reduction components; their selection, application, and installation.
7. Bonds and bonding.
8. Shields and shielding.
9. Testing for radio interference.
10. Maintenance aspects of radio interference.

Navy Safety Precautions for Forces Afloat (OPNAVINST 5100.19)

This manual type publication was developed in support of the policy and continuing efforts of the Navy to promote and maintain safety at sea. It applies entirely to operations afloat and is the first separate formal safety precautions manual developed for forces afloat. It contains generalized and specific precautions within several areas.

The generalized safety precautions provide a base for developing supplemental precautions. Some chapters of the manual are quite specific and require special attention of personnel involved with the specific operations.

Chapter five, entitled Electrical/Electronic, is mentioned here as it contains general precautions applicable to all hands. It addresses warnings and precautions to be taken when working with electronics and portable power tools, and information on the treatment of electrical shock.

The manual points out that it is the responsibility of supervisory personnel to ensure that their subordinates are instructed in and carry out all applicable safety precautions. However, each individual is responsible for knowing and observing them.

A knowledge of information contained within the manual, and practice thereof, will enhance personnel safety and preserve material and equipment while contributing to the operational readiness and effectiveness of the unit.

Safety Precautions for Shore Activities (NAVMAT P-5100)

The purpose of this manual is to present the safety precautions applicable to Navy shore activities, including shore (field) activities of the Operating Forces and fleet schools. The safety precautions given in this manual are of necessity basic and general in nature, and are not inclusive of all conceivable operations and functions involved in the great variety of shore activities. In many instances references are made to other publications for detailed safety precautions applicable to specific operations.

The senior AE should become very familiar with the contents of this manual. It is the responsibility of supervisory personnel to see that safety precautions are strictly adhered to. Continuous cooperation and vigilance of all personnel are needed to see that all operating procedures and work methods do not unnecessarily expose personnel to injury, or property to loss or damage.

FILING AND MAINTAINING PUBLICATIONS

A steady stream of technical correspondence, directives, and publications is received by the Avionics Division. A system for filing this paperwork and disseminating the useful information must be established if full value of these sources is to be realized. In order for the information to be of value to the division, it must be brought to the attention of the personnel in the shop. A routing system within the shop will provide for dissemination of the information to all personnel concerned. Particular attention must be paid to ensuring that TAD personnel are brought up to date periodically and as necessary.

There is a great deal of technical information received concerning the many pieces of equipment. The file location of this information must be known and accessible so the idividual assigned to repair or test the equipment will have all the necessary information available.

The avionics shop, in conjunction with the quality assurance division, should establish and maintain a dispersed technical library within its spaces. The shop's technical library should consist primarily of a complete and current set of letter publications and technical manuals pertinent to equipments and aircraft serviced by the shop.

The technical library should be kept in an orderly fashion and its facilities made readily available to all assigned personnel. General and little used material should be filed in the division or shop office, and the manuals should be filed in the shop.

For larger activities, or those where many people utilize the same technical library, it is imperative that a checkout system be instituted for certain publications. This system will enable an interested individual to locate needed publications checked out by other personnel. It will also aid in maintaining a complete and current library.

Reporting of Errors in Manuals

A part of the NAVAIR program to improve the quality and accuracy of its technical manuals encourages its users to report errors and discrepancies. The basic reporting document is the Unsatisfactory Material/Condition Report (UR), OPNAV Form 4790/47. Detailed procedures for the preparation, security classification, and mailing of completed URs are contained in the current OPNAV Instruction 4790.2 (Series).

SECURITY OF CLASSIFIED PUBLICATIONS

Security is one of the chief responsibilities confronting the Avionics Division. Although security is the duty and responsibility of all hands, security rests heavily upon supervisors because of the classification of the equipments, systems, and publications with which AE's work.

For detailed information on security consult the *Department of the Navy Information Security Program Regulation* (OPNAV Instruction 5510.1). Excerpts from this manual can be found in the *AE 3 & 2* rate training manual in the chapter entitled SECURITY.

CHAPTER 3

AIRCRAFT ELECTRICAL CONTROL AND DISTRIBUTION

In recent years, the ac power systems in naval aircraft have assumed greater importance as part of the aircraft's functioning equipment. The trend in electrical power systems is away from direct-current systems and toward alternating-current systems. More specifically, the trend is almost entirely toward polyphase ac systems for the generation and distribution of electrical power.

The weight-to-performance ratio is of prime importance in the design of all airborne equipment, and this applies to electrical power components as well. This fact has a direct bearing on the reasons for using polyphase systems instead of single-phase systems. A 3-phase ac generator of given weight and dimensions may have up to a 60 percent greater power rating than a single-phase machine of the same physical size and weight. This same approximate power rating applies also to ac motors.

Another important consideration is the conductor weight of the distribution system. To conduct an equal amount of power, the 3-phase system requires only about 75 percent of the copper weight that is required for a single-phase system.

Also, the pulsating load on a single-phase ac generator is reflected in continuous pulsations of the input drive shaft speed and torque. In a 3-phase generator, individual phase power is pulsating, but the total power of all three phases is more constant if the load is balanced. Consequently, the load on the generator drive shaft is relatively constant.

The basic ac functions, circuit characteristics, and definitions necessary for a complete understanding of aircraft electrical power generating systems are found in *Basic Electricity*, NAVEDTRA 10086 (Series), and should be studied in conjunction with this chapter.

GENERATOR CONTROL

When speaking of ac generator control, we are speaking primarily of three separate areas; frequency control, voltage control, or the switching action necessary to turn the generator output on or off. Frequency control is accomplished by controlling the speed of the generator through the use of any of several types of constant speed drives.

Voltage control can be accomplished in either of two different methods. In smaller generator systems, such as inverters, the output voltage may be controlled by maintaining the constant current, i.e. if the generator load is reduced, a device in the voltage regulator increases the load (decreases resistance) which, in turn, holds the voltage at a constant value. This type of voltage regulation is limited to small loads and therefore is not discussed further in this chapter. The second type of voltage regulation involves changing the current in the ac generator field so that the induced voltage remains constant.

The switching action of a generator control system can be either the simple movement of a switch to turn the generator on or off, or it may also include the devices necessary to detect and protect both the aircraft and the generating system from faults in the system. These faults may include over and under frequency, over and under voltage, shorted or open feeder cables, or a phase sequence malfunction.

More sophisticated controls are necessary when a two-or-more generator system is operated in parallel (bus-tied, where more than one generator is supplying the same load at the same time). Although parallel generator operation is not used in present day aircraft, it has in the recent past and could be again should the technology be improved. Parallel operation of ac generators is covered in *Basic Electricity*, NAVEDTRA 10086 (Series).

FREQUENCY

Until recent years, any demand for a constant-frequency ac power supply in an aircraft was usually satisfied by one or more inverters. Constant-frequency delivered by an engine-driven generator was difficult to obtain because of constant changes in the engine's speed. The problem of increased weight precluded for a time the use of a device to convert variable engine rpm into a fixed generator-drive rpm. However, as the power demanded from fixed-frequency systems increased, the size of the inverters also increased. This trend continued until the weight of the inverters, plus the extra weight required in their dc power supplies, became as great as the combined weight of the ac generators and their constant-speed drivers. Thus, constant-speed engine-driven ac generators were made feasible and came into use. Since the introduction of constant-speed engine-driven ac generators, one of the AE's duties is to become familiar with the frequency controls of these systems.

Nonelectrical Frequency Control

In most instances, ac generator frequency is controlled by a mechanical governor which controls the speed of the prime mover driving device. In these installations, electrical frequency sensing and correction are not used. Where compressed air turbines are used, jet engine driving power is utilized in the form of compressed air taken from the compressor section of the engine. AC generator speed is then controlled by the amount of air passed through the turbine.

Another engine-powered and mechanically speed-regulated ac generator drive is the type used on the A-4E aircraft. This assembly consists of an engine-driven transmission and an integral lubricating system. The assembly's input rpm varies with engine speed. However, its output rpm is held within a narrow speed range by the assembly's speed change mechanism.

Electrical Frequency Control

Newer aircraft and avionics equipment require close tolerance frequency control that the mechanical constant speed drive cannot provide alone. Electrical "fine tuning" of the mechanical governors is employed because they are inherently more sensitive to frequency changes than mechanical controls. An electrical type system is also more easily controlled from a remote location by use of a servo loop. The schematic in figure 3-1 represents such a system that is in current use.

The line voltage, whose frequency is to be regulated, is connected across the primary of transformer T1 which has two secondary windings. Each secondary circuit consists of a series circuit comprised respectively of an inductance, capacitance, rectifier, and one-half of potentiometer R1. The series combinations of L2 and C4, and L1 and C5 are each 20 hertz away from resonance when the line frequency is 400 hertz. Capacitors C1 and C2 filter the ripple output of rectifiers CR1 and CR2, so that a smooth dc flows inward from opposite ends of R1. The center tap of R1 is a common return for both rectifiers.

When the frequency is 400 Hz, the impedance of L1 and C5 is equal to that of L2 and C4 because both are being subjected to a frequency that is 20 Hz away from their resonant frequencies. Assume line frequency rises to 410 Hz. L2-C4 is now only 10 Hz off resonance, so its impedance decreases. However, L1-C5 is now 30 Hz off resonance, and its impedance increases. As a result, a greater voltage appears across the upper half of R1 than across the lower half, and dc flows through the saturable reactor control coils CW1, CW3, CW4, and CW2. These coils are wound so that with a given direction of dc flow, their effect is to increase the inductance of the SR1 and SR4 load windings, while decreasing the inductance of the SR2 and SR3 load windings. Current is effectively cut off through SR1 and SR4, so that ac flows only through a series path comprised of

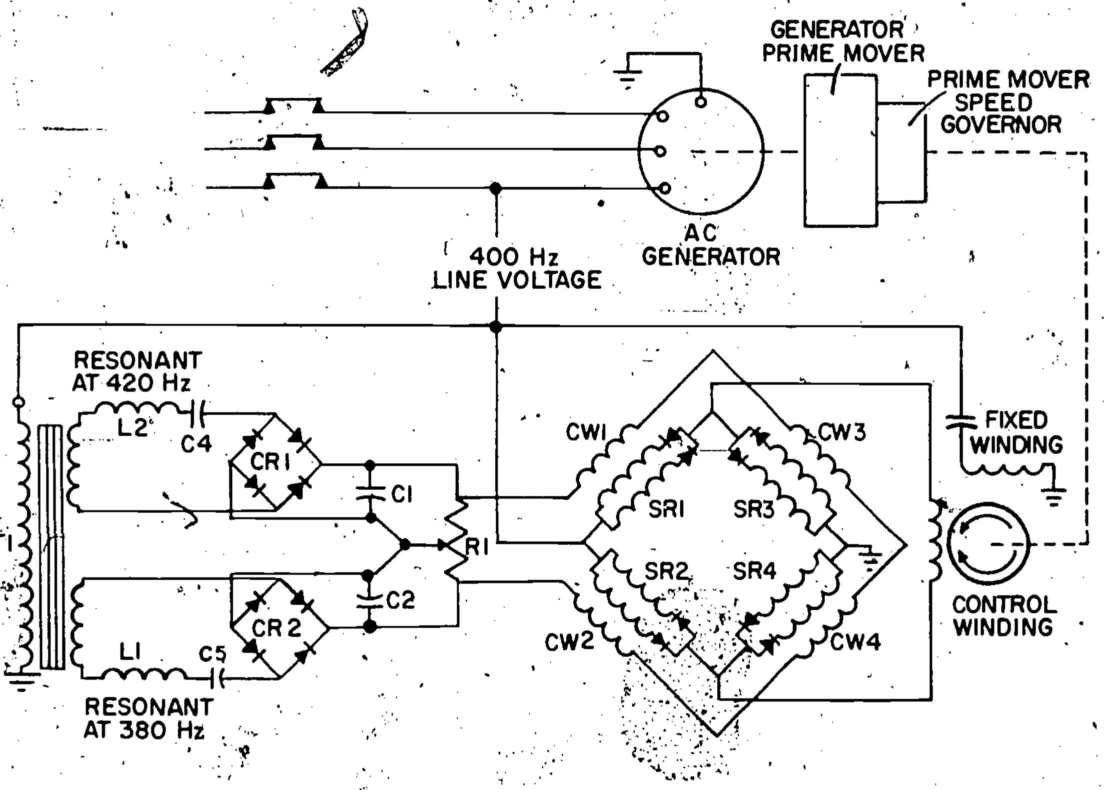

208.54

Figure 3-1.—Electrical frequency sensing and control system.

SR2, the motor control winding, SR3, and ground. The resultant motor rotation is in a direction to lower the prime mover governor setting, and thus bring line frequency back down to 400 Hz.

If a drop, rather than rise, in line frequency initiates a control cycle, the control coil current is in an opposite direction. SR2 and SR3 are cut off, an alternating current flows in the series path of SR1, the motor control field, SR4, and ground. It is significant to note that for a given direction of control coil dc, a given alteration of applied line voltage flows upward through the motor control winding. Had control coil dc been reversed, that same alteration would have flowed downward. Thus, the direction of the induction motor's field rotation, and consequently its shaft rotation, is controlled by the direction of the saturable reactor control winding current. The direction of the control winding current is in turn controlled by line frequency.

The system just described is more sensitive and maintains closer frequency control than any mechanical control system in current use. Thus, it fulfills the requirement of close automatic frequency control. It also provides the required means of remote manual frequency control. Manual frequency adjustments are made simply by moving the wiper of R1 away from the center, in whatever direction frequency must be changed.

VOLTAGE

Until the ac generator came into popular use, the carbon pile voltage regulator was used almost exclusively. The carbon pile voltage regulator, however, has several disadvantages when used in our modern aircraft power generating systems, including a slow reaction time and a high failure rate. Early aircraft had electrical power for instrumentation, lighting, communications, and some small motors, all of which required only approximate voltage levels and fluctuations, were tolerable. In modern aircraft, such as the F-14 with its two 75-KVA generators, large electrical loads may be turned on or off at random, but electronic and radar systems operating from the same power source may be severely damaged by voltage fluctuations or spikes that rapid load changes create. Carbon pile voltage regulators, because of their mechanical operation, also need frequent adjustments to stay within tolerance.

The static regulator overcomes most of these disadvantages in that it has no moving parts, and through the use of transistors and/or magnetic amplifiers it can be made compact and relatively light weight. The next paragraphs discuss static regulators.

Static Regulators

The static voltage regulators explained in this section consist of the following circuits: highest-phase takeover (HPT); Zener diode reference; transistor preamplifier; 3-phase, half-wave, magnetic amplifier; and stabilizing circuits. In the circuit descriptions and theory of operation, refer to figure 3-2.

HIGHEST-PHASE TAKEOVER.—The HPT sensing circuit utilizes highest-phase takeover voltage sensing. It consists of autotransformers, rectifiers, an inductor, and a capacitor. The voltage regulator functions to maintain a constant voltage across capacitor C101.

ZENER DIODE REFERENCE.—The Zener diode reference circuit consists of two diodes and a resistor. The voltage across the Zener diodes remains almost constant regardless of the voltage regulator input voltage. The resistor absorbs the line voltage variations.

TRANSISTOR PREAMPLIFIER.—The transistor preamplifier consists of two transistors and two windings of a magnetic amplifier. An inductor and a capacitor form a ripple filter to the input base of one transistor. Two resistors are used as gain-stabilizing resistors in the transistor emitter circuit to stabilize gain against temperature changes. Rectifiers are used to prevent transistor breakdown by limiting base-to-emitter voltages.

THREE-PHASE, HALF-WAVE, MAGNETIC AMPLIFIER.—The 3-phase, half-wave magnetic amplifier consists of three windings. Resistors ensure that each amplifier gate winding delivers an equal share of the magnetic amplifier output current. A capacitor is used as a radio noise filter, while a resistor is used as a current limiter. The input to the 3-phase, half-wave magnetic amplifier is supplied from the 3-phase line voltage. The output from the magnetic amplifier controls regulator output. This output is fed to the static exciter.

STABILIZING CIRCUITS.—The stabilizing circuit consists of a lead network (comprised of a capacitor and voltage divider) and a lead-lag network (a capacitor, resistor, transistor, and a filter capacitor). The stabilizing circuit permits fast regulator response with good stability.

THEORY OF OPERATION.—The static voltage regulator (transistor/magnetic amplifier type) supplies a control signal to the static exciter that regulates generator output. This control signal is developed in the following manner. The output of autotransformers T101, T102, and T103, of rectifiers CR104, CR105, and CR106, and of inductor L104, is proportional to the average of the three line-to-neutral voltages. The output of autotransformers T101, T102, and T103, as rectified by CR101, CR102, and CR103, represents the peak of each line-to-neutral voltage. During normal operation (with balanced or moderately unbalanced loads) the peaks of the outputs of CR101, CR102, and CR103 will be slightly under the voltage from the output side of L104 to ground. Hence, C101 will be charged up to a level representing this average value, and the regulator will regulate the average value of line voltage. During operation with a large unbalanced load, the voltage of one of the lightly loaded phases will tend to rise considerably, thus causing one of the peak voltages from CR101, CR102, or CR103 to exceed the average voltage output of L104. Capacitor C101 will then be charged up to this peak value and the regulator will regulate and

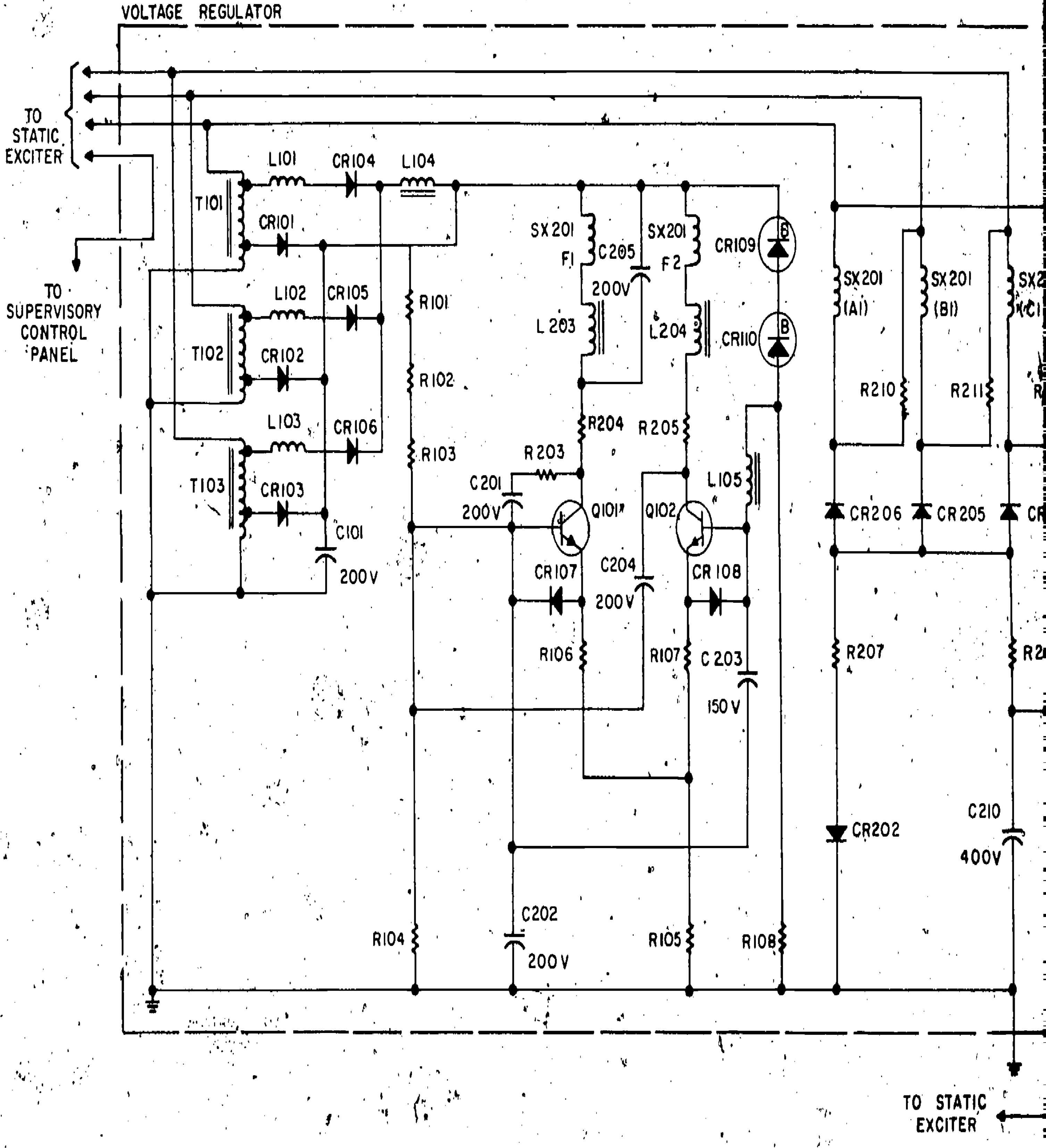

Figure 3-2.—Transistor/magnetic amplifier voltage regulator schematic.

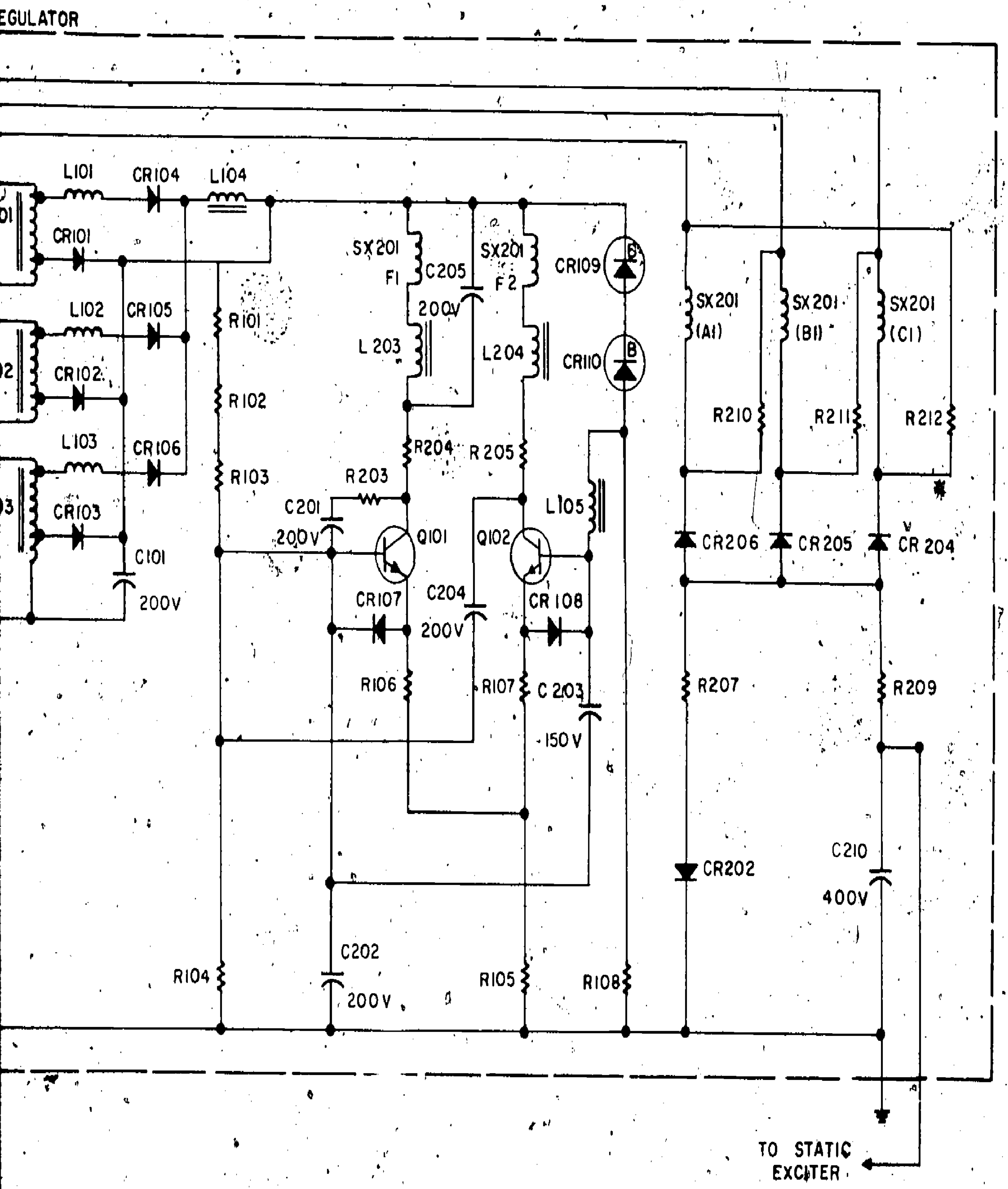

208.61

Figure 3-2.—Transistor/magnetic amplifier voltage regulator schematic.

tend to limit the rise of this voltage. This circuit is so designed that the highest-phase takeover is gradual and the point of takeover is not sharply defined. (Note that inductors L101, L102, and L103 are radio noise filters and do not form an essential part of the HPT sensing circuit.)

The actual voltage being regulated is the voltage between R104 and ground, in the voltage divider (R101, R102, R103, and R104) that is connected across capacitor C101. This voltage is compared with the voltage to ground to form an error signal. This error signal is then fed to the transistor preamplifier and from there to the magnetic amplifier SX201 to control the regulator output. Resistors R102 and R103 are used to adjust the line voltage to the desired value. Zener diodes CR109 and CR110 form the reference voltage. The voltage drop across them is almost constant regardless of operating conditions, once the system voltage is built up. Resistor R108 limits the current through these diodes and absorbs the line voltage variations.

It should be noted that both the voltage divider circuit (R101 to R104) and the voltage reference circuit (CR109 and CR110) are both connected to the HPT output. Thus, the same dc voltage will appear across both circuits. Should the 3-phase line voltage rise approximately 2 volts line-to-ground, the voltage rise will be approximately 2 volts dc. Because the voltage drop across the Zener diodes is constant, any change in voltage will be developed across R108 and applied to the base of Q102. The same potential with respect to ground rises by the ratio of the value of R104 to the sum of the values of R101, R102, R103, and R104, and is applied to the base of Q101. The ratio of R104 to R101 through R103 is approximately 16%. An error signal of 0.32 volts (16% of 2 volts) is then applied to the base of transistor Q101 in the transistor preamplifier. A more positive potential of 2 volts is applied to the base of Q102. The transistor preamplifier is so connected that when the base of Q101 is more negative than the base of Q102, as it is when the line voltage rises, it will allow less current to magnetic amplifier SX201 and control winding F1. At the same time Q102 will allow more current through control winding F2. This difference in control winding signals causes the output of the magnetic amplifier to increase, thereby returning the line voltage to normal. Conversely, a decrease in line voltage will tend to reduce the potential. Thus, the base of Q101 will be at a higher potential than the base of Q102, and a difference signal will be supplied to the magnetic amplifier causing it to decrease its output. This, in turn, will tend to raise the line voltage.

There are a number of other components associated with the transistor preamplifier. They are: inductor L105 and capacitor C203, which form a ripple filter on the input base of Q102; resistors R106 and R107, which are gain-stabilizing resistors placed in the transistor emitters to stabilize transistor gain over the equipment's operating temperature range; and rectifiers CR107 and CR108, which prevent transistor breakdown by limiting base-to-emitter voltages.

The magnetic amplifier used to control the regulator output is a 3-phase, half-wave type, and its input is supplied from 3-phase line voltage. Rectifiers CR204, CR205, and CR206 are so connected that current is fed to the amplifier gate windings A1, B1, and C1 during the negative half of the cycle. By contrast, current flows in the HPT circuit only during the positive half of each cycle. During the portion of each half cycle in which the amplifier gate winding fires, a heavy pulse of current will flow through the regulator sensing leads. If the sensing lead impedance is high, this current will cause an instantaneous drop in the voltage at the regulator end of the sensing leads. If the magnetic amplifier was connected so that current flowed to the amplifier during the positive half of each cycle, this voltage drop would affect the voltage seen by the HPT circuit and cause erroneous regulation. However, the HPT circuit will not see voltage drops present during the negative half cycle.

Other components associated with the magnetic amplifier are: resistors R210, R211, and R212, which ensure that each magnetic amplifier gate winding delivers an equal share of the magnetic amplifier output current; radio noise capacitor C210; current-limiting resistor R209; rectifier CR202; and resistor R207, which limit peak current through CR202.

CIRCUIT PROTECTION

With the incorporation of high-capacity ac power systems in naval aircraft, there came the accompanying problems of protecting both the aircraft and its ac system from a number of possible fault conditions. Such foreseeable conditions included power feeder cables shorting to ground (ground fault), improper system voltage (voltage fault), and improper system frequency (frequency fault). A discussion of each type of fault follows.

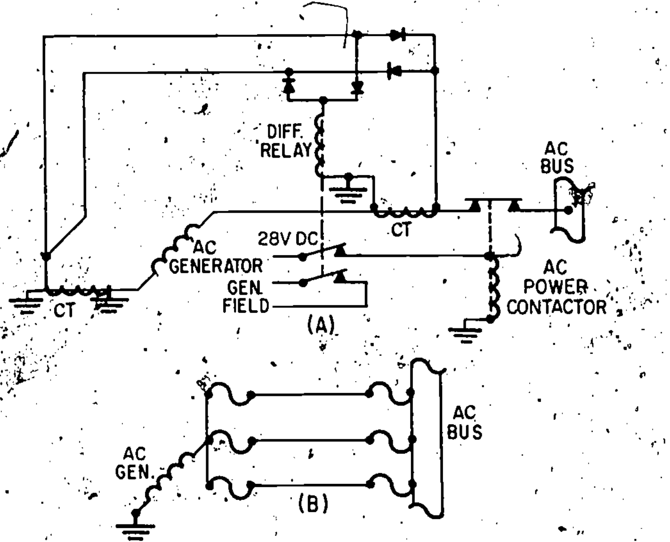

208.77

Figure 3-3.—(A) Single-function protector; (B) dual-function protector.

Ground-Fault Protection

This type protection comes into use after a ground fault has occurred, mainly to prevent fire or damage to the aircraft. The primary function of protective networks or devices is usually to disable a faulty power system. However, some devices designed to provide this protection also have a secondary feature, that of isolating only the damaged or faulty portion of a system, when possible, thus permitting continued use of the undamaged portions. These may be referred to as dual-function devices.

Single-function devices do not permit continued use of the undamaged portions, but function only to disable and isolate an entire power system when a fault occurs anywhere in the system's protected portions. These portions include only the generator, its power feeder cables, and the bus to which it is connected. (Branch circuits coming off the bus have their own fuses and circuit breakers.)

The type of device to use in a particular ac power system is dictated by the nature of the equipment supplied by that particular system. All such equipment must fall into at least one of the following categories:

1. Vital equipment required at all times to maintain controlled flight.
2. Equipment needed to perform the aircraft's mission, but not necessary for controlled flight.
3. Convenience equipment not necessary for either of the above-mentioned items.

Obviously, single-function devices could not be used in systems supplying power for category (1) equipment. On the other hand, it would not be necessary to employ dual-function devices in systems supplying power for category (3) equipment. The choice of device for category (2) would depend on the importance of the aircraft's mission. An additional feature of both dual- and single-function devices and networks is their fail-safe design. This feature is incorporated wherever possible. If a protective device, circuit, or network is fail-safe, this means that the protected ac power system is not disabled should the protective equipment itself fail.

Figure 3-3 illustrates two typical methods currently employed to provide ground-fault protection. Both parts (A) and (B) depict only one phase of a three-phase generator system, where each phase is identically protected. Part (A) is a differential-relay single-function method, and part (B) is a fuse mesh dual-function method. In part (A), the two current transformers are connected in opposition, and their resultant voltage at the differential relay is zero. If either the hot feeder cable or the ground feeder cable becomes grounded, then the currents through the two cables are unequal, and this results in unequal current transformer output voltages. The

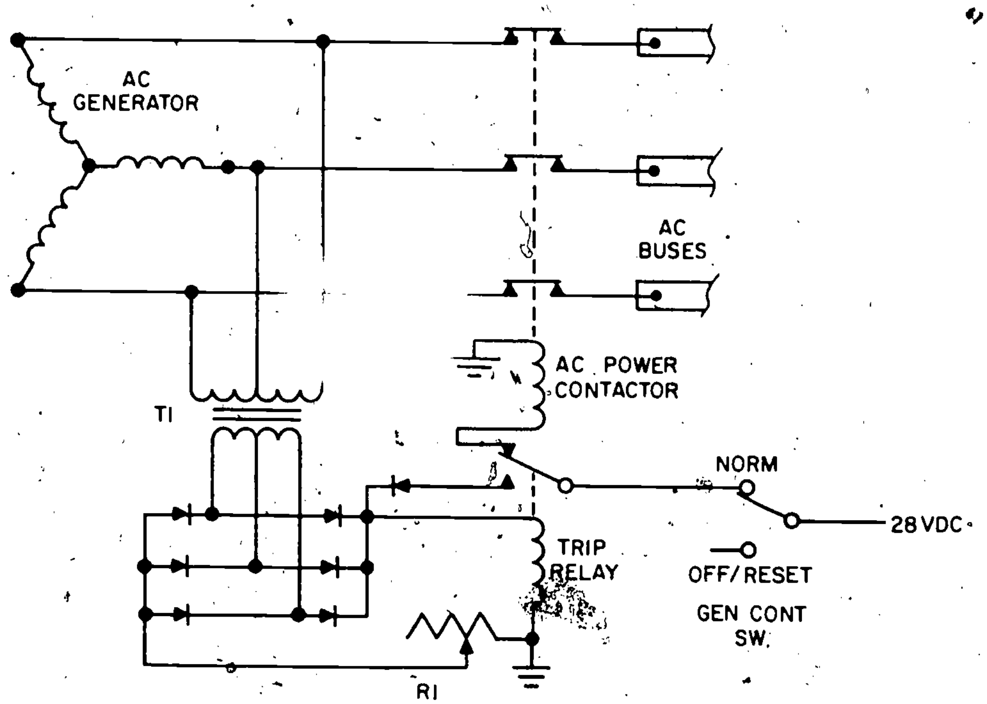

208.78

Figure 3-4.—Overvoltage protector circuit.

unequal voltages cause the differential relay to energize, which disconnects the generator field excitation and removes power from the ac power contactor relay (shown in the power on—energized—condition). This is a single function fault circuit in that it disables the entire 3-phase generator by removing the generator field excitation, even though there was a fault in only one phase of the generator.

Part (B) of figure 3-3 is the dual-function method. If a ground fault occurs on any one of the three parallel feeders, the fuses at the ends of the faulted feeder open. This isolates only the faulted feeder line, allowing continued use of all three phases of the generator.

Under/Overvoltage-Fault Protection

Under normal conditions, system ac voltage is controlled by the voltage regulator. However, to cope with foreseeable voltage-fault conditions not contr[illegible]e by the regulator, provisions for backup voltage-fault protection are needed in ac power systems. These provisions are made in a number of different ways, for different aircraft, and the best way to familiarize yourself with any particular method or device is to consult the Overhaul Instruction Manual, or the Maintenance Instructions Manual.

One means of obtaining overvoltage protection is by the use of fuses in the power feeders. These are the same fuses which also serve as ground-fault protectors. The ampere rating of these fuses is such that nontransient over-voltages cause sufficient overcurrent to open the fuses, before serious damage occurs.

Where an overvoltage tripping relay protective device is used, its general circuitry is usually similar to that shown in figure 3-4. The average of all three-phase voltages is induced into the secondary of the step-down transformer and applied through the full-wave rectifier diode matrix to the coil of the trip relay. Trip voltage adjustment is made with R1. When a highvoltage fault occurs, the trip relay removes power from

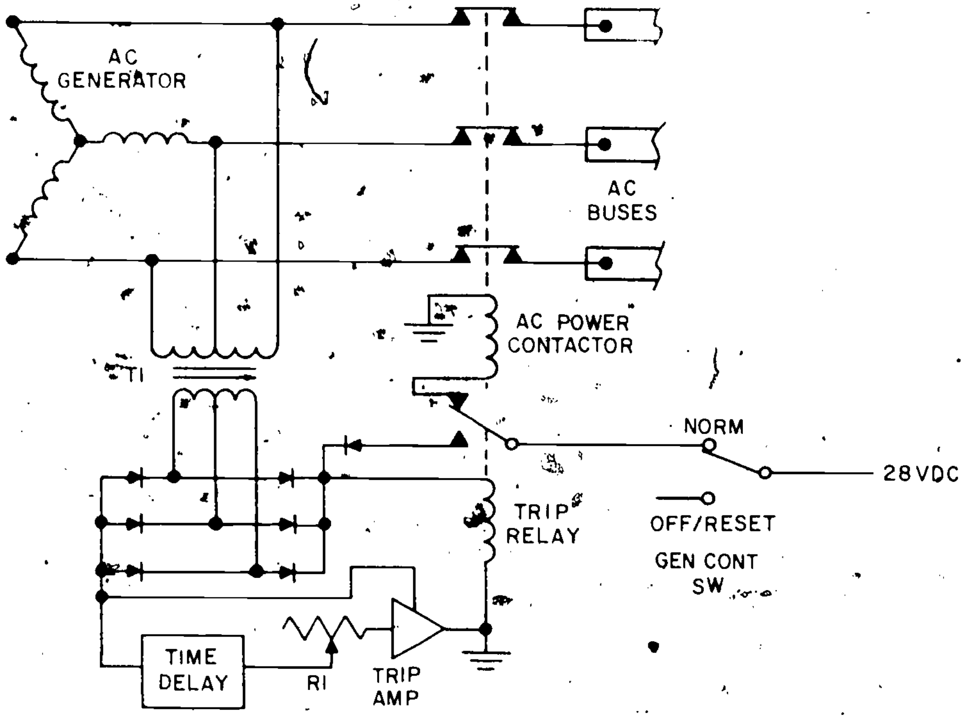

208.270

Figure 3-5.—Undervoltage protector circuit.

the AC POWER CONTACTOR relay and supplies its own holding circuit. The generator will remain off the line until the generator control switch is moved to OFF/RESET then back to the NORM position, or when power is removed from the aircraft and reapplied.

Since an overvoltage is normally the result of a voltage regulator failure, some aircraft installations, particularly multigenerator installations, do not have a reset capability for an overvoltage condition. There is usually a time delay network somewhere in the trip relay circuit to prevent the relay from energizing on transient or spike voltages.

Undervoltage fault protection can be provided by a similar circuit; however, different conditions must be considered. An undervoltage may be caused by a faulty voltage regulator, a faulty (shorted) load, or under normal conditions when the generator (and prime mover) is being shut down. The load is usually protected by a fuse or circuit breaker. However, there are parts of the power circuit that are not protected. If a large load (current) is imposed on the generator by a faulty circuit breaker or fuse, or a bus is shorted to ground, it can be extremely dangerous to the system, the aircraft and the crew even though the undervoltage itself is not dangerous. This is the type of problem that the undervoltage protection circuit must protect against.

Relatively harmless undervoltage conditions may occur from adding large loads, such as turning on hydraulic pumps or electrical heaters, but with a properly functioning voltage regulator the time period of the undervoltage will be very short in duration. To prevent these voltage spikes from causing the generator to drop off the line, a time delay that may range up to four or five seconds is included in the undervoltage circuit. A prolonged undervoltage condition, however, will cause the generator to trip off the line and the GEN CONT SW (figure 3-4) must be placed in the OFF/RESET position and then back to NORM to enable the generator. To satisfy the requirement that the circuit must be fail safe, the relay must be deenergized when the terminal voltage is at the proper level and energized when the voltage drops below the undervoltage limit.

In figure 3-5, the full wave rectifier bridge output dc voltage is monitored by the trip amplifier through the time delay. R1 sets the threshold level at which an undervoltage will cause the trip relay to energize. Once energized, the trip relay has its own holding circuit, from 28-VDC through the GEN CONT SW, the relay coil contacts and coil, to ground. The generator may be connected back to the buses by placing the GEN CONT SW to OFF/RESET and back to NORM. However, if the undervoltage still exists, the circuit will again trip the generator off the line.

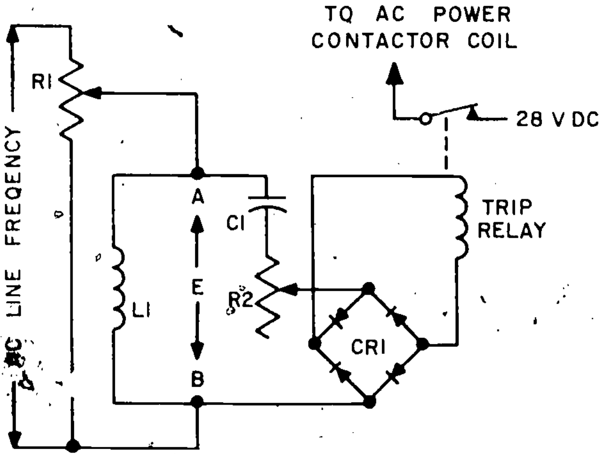

208.79

Figure 3-6.—Electrical underfrequency protector.

Underfrequency Fault Protection

During certain phases of ac generator operation, it is necessary to prevent the generator's output from being connected to its normal loads. One of the most common of these is during a low-frequency output condition, such as when the generator has been started but has not reached full speed. Another is when the generator has been shut down and slows below a safe output frequency. The generator may be connected or disconnected, as needed, through the use of any of a number of frequency-sensitive devices.

The simplest of these employs a speed switch which closes when the ac generator's prime mover attains a safe speed (frequency). This speed switch simply opens or closes the circuit to the main ac power contactor. In general, a mechanical speed-switch controlled circuit is not as sensitive as an electrically controlled circuit, so it is used where the allowable frequency range is relatively wide.

Where frequency protection must be limited to a narrower range of generator speed, the electrical type is generally used. The operating principles of the most common electrical types are similar to those of the simplified circuit shown in figure 3-6.

Capacitor C_1 and inductor L_1 make up a parallel LC circuit that is tuned to 400 Hz. At resonance, impedance of the LC circuit is maximum, which causes a small voltage drop across R1 and a large voltage drop across the LC circuit (E_{AB}). Since E_{AB} is large, it causes a sufficient amount of current to flow through the TRIP RELAY coil to cause it to energize and supply power to the AC POWER CONTACTOR coil. When line frequency decreases, the parallel LC circuit comes out of resonance, and the decreased impedance causes more voltage drop across R1. E_{AB} decreases as X_L decreases and X_C increases, causing a lesser current through the TRIP RELAY coil. The TRIP RELAY deenergizes. This in turn opens the main AC POWER CONTRACTOR, and the ac generator is disconnected from the bus. Coarse adjustment of the trip frequency is made with R1, and fine adjustment is made with R2.

Phase Sequence Protection

When a load is to be shared by two ac generators, or where a given load may be supplied by more than one generator at different times, provisions must be made for indicating relative generator phase rotation prior to connecting an ac generator to the bus. A common situation where such protection is needed is where an external ac power unit may be connected to an ac system normally supplied

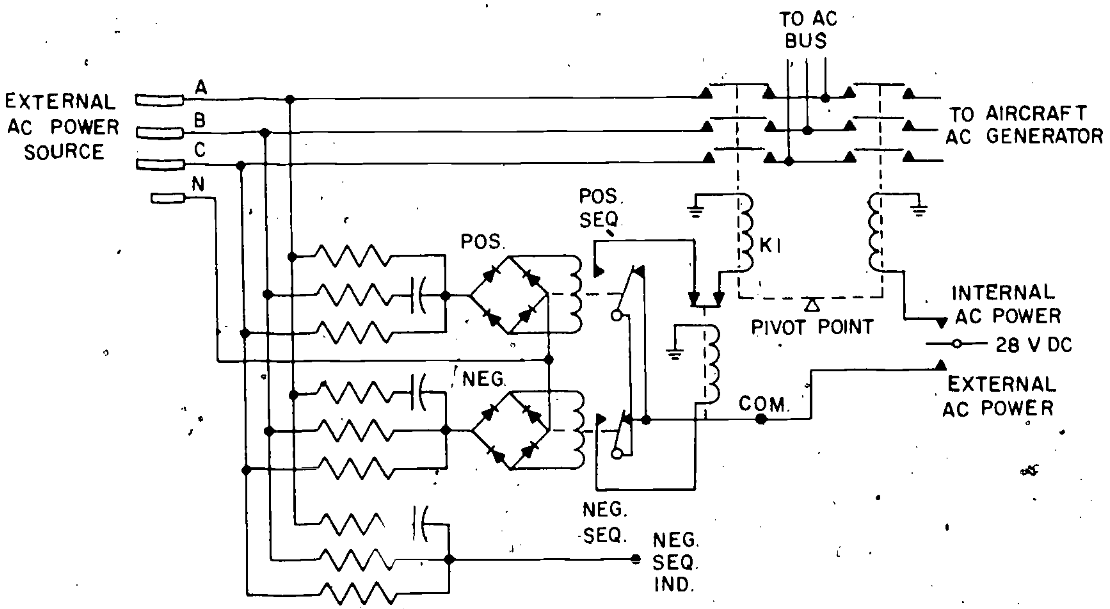

208.80

Figure 3-7.—Phase sequence relay.

by the aircraft ac generator. If the aircraft ac generator is connected to the load with a positive (ABC) phase rotation, it is not allowable to use an external power unit with a negative (ACB) phase rotation. A phase sequence-sensitive relay designed to prevent this is shown in figure 3-7.

The unit consist of three filter networks. one sensitive only to a positive phase sequence, and the other two sensitive to a negative phase sequence. The output of two of the networks, marked POS. and NEG. operate their associated coils. When the ac phase sequence at terminals A, B, and C is in the proper direction, the POS. coil is energized. If the phase sequence is reversed, the NEG. coil is energized. DC voltage from the COM. terminal is connected either to the POS. SEQ. terminal, or NEG. SEQ. terminal, depending on which relay coil is energized. Thus, external power contactor K1 may be closed only when the external power source has the correct phase rotation. The third filter network is sensitive only to a negative phase rotation, and provides a voltage for a light or other warning indicator.

POWER DISTRIBUTION

After the ac voltage is produced and controlled to the proper voltage and frequency levels, another system is used to supply the voltage to each separate load. The electrical power is supplied to a bus system that will eventually supply the individual load. This group of buses is called the power distribution system, and is different for each type aircraft or weapons system. Priorities are established and assigned to each bus so the equipment that a bus supplies will operate only when that bus is powered. Assignment of priorities to the various buses protects the loads on those buses from a faulty generator, and at the same time the generator is protected from a faulty load or bus.

Priorities are established by the flight crew's need of the components or systems. For instance, the instruments required to monitor engine performance and flight attitude are connected to the bus having the highest priority. Lighting and air conditioning are examples of equipment that may be put on a bus with the lowest priority. Tables 3-1 and 3-2 list avionics systems that are powered by the power

Table 3-1.—P3C AC Bus Distribution

MONITORABLE ESSENTIAL AC BUS
- AIR CONDITION INSTRUMENTATION
- AIR FOIL TEMP AND HEAT CAUTION
- ARA-50 AMPLIFIER
- ARA-25A/50 ANTENNA
- AUX VENT ACUTATOR
- EMPENNAGE DEICING TIMER MOTOR
- FLT STATION AND CABIN TEMP CONTROL AND INDICATOR
- FUEL CROSSFEED CONTROL
- FUEL TANK SHUTOFF VALVE CONTROL
- FUEL QUANTITY INDICATORS (FLIGHT STATION)
- ICE DETECTOR
- RED EDGE AND POST LIGHTS FOR OVERHEAD, INSTRUMENT, AND PEDESTAL PANELS
- LANDING LIGHTS
- F.D.I. (PILOT AND COPILOT)
- NESA WINDSHIELD
- OIL COOLER FLAP CONTROL
- TEMPERATURE DATUM CONTROL
- TORQUEMETER
- VERTICAL (STANDBY) GYRO
- WINDSHIELD WASHER PUMP
- 26 VOLT INSTRUMENT TRANSFORMER NO. 1 AND NO. 2
- PILOT AND COPILOT RED INST LTS
- WINDSHIELD WIPERS
- XMFR RECT NO. 1
- NAV/COMM BARO ALT VIB
- ESS LTG & IND CONTROL
- HSI MODE LIGHTS
- FLT DIR PWR

28V AC FWD LIGHTING XFMR
- C/B PNL RED EDGE
- DOME AND FLT CAPT READING
- RH PITOT HTR
- STEP LIGHT
- SEXTANT
- ROCKET SIGHT
- TAXI LIGHTS
- WHEEL WELL LIGHTS
- WING AND TAIL LIGHTS

ELECTRONICS
- DOPPLER NAVIGATION RADAR
- UHF-1 TRANSCEIVER
- VHF/VOR-2 RECEIVER-TRANSMITTER
- HF-1 TRANSCEIVER
- ARN-87 BEARING CONVERTERS
- INS 1
- RAWS (1 AND 2)
- VOR-1 NAVIGATION RECEIVER
- CENTRAL REPEATER SYS
- HSI CONTROL (PILOT, COPILOT, AND NAV/COMM)
- NAV INTERCONNECTION BOX (BUS 1 AND 2)
- TACAN
- TAS
- DATA LINK (DATA TERMINAL SET)
- COMM SYS SEL
- HF SECURE VOICE
- UHF SECURE VOICE
- BARO ALTIMETERS ENCODER (PILOT AND COPILOT)

ARMAMENT
- MISSILE AN/ARW-77
- JETTISON PROGRAMMER
- DOORS (SONO WITH PRESS)
- SONO SET

26 VOLT INSTRUMENT TRANSFORMER NO. 1
- BLEED AIR MANIFOLD PRESSURE INDICATOR

26 VOLT INSTRUMENT TRANSFORMER NO. 1—Continued
- FLAP POSITION INDICATOR
- HYDRAULIC PRESSURE INDICATOR SYSTEM NO. 1
- LEFT EDC AIR PRESSURE INDICATOR
- NORMAL BRAKE PRESSURE INDICATOR
- OIL COOLER FLAP POSITION INDICATOR (ENGINE 1 AND ENGINE 4)
- OIL PRESSURE INDICATOR (ENGINE 1 AND ENGINE 4)

26 VOLT INSTRUMENT TRANSFORMER NO. 2
- EMERGENCY BRAKE PRESSURE INDICATOR
- FUEL CROSSFEED MANIFOLD PRESSURE INDICATOR
- HYDRAULIC PRESSURE INDICATOR SYSTEM NO. 2
- OIL COOLER FLAP POSITION INDICATOR (ENGINE 2 AND ENGINE 3)
- OIL PRESSURE INDICATOR (ENGINE 2 AND ENGINE 3).
- RIGHT EDC AIR PRESSURE INDICATOR

START ESSENTIAL AC BUX
- TURBINE INLET TEMPERATURE

MAIN AC BUS
- EMPENNAGE DEICING (PARTING STRIPS)
- FEATHER PUMP (ENG NO. 1 AND NO. 4 ALT)
- FEATHER PUMP (ENG NO. 2 AND NO. 3)
- FORWARD FUEL TRANSFER PUMP
- XFMR RECT NO. 1
- FUEL BOOST PUMP NO. 1 AND 3
- FUEL DUMP JETTISON PUMP
- FUEL FLOW INDICATOR
- FUEL QUANTITY INDICATOR (FUELING PANEL)
- HYDRAULIC PUMP NO. 1
- OVERHEAD LIGHTS
- PROPELLER SYNC CONTROL
- SIDE WINDSHIELD HEAT POWER

ELECTRONICS NO. 1 FEEDER
- CREW LIGHTING (NAV/COMM & SS3)
- LORAN RECEIVER
- IFF INTERROGATOR
- HF-2 TRANSCEIVER
- ECM
- KEYBOARD SECURITY UNIT
- ON TOP POSITION INDICATOR (OPTI)
- AUTOMATIC PILOT SYSTEM
- TELETYPE SYS
- UTILITY OUTLETS
- SEARCH RADAR
- LLLTV
- MAD/SAD
- BT RECORDER

ELECTRONICS NO. 2 FEEDER
- PILOT'S DISPLAY
- DATA LINK
- FWD CAMERA
- AFT CAMERA
- INS-2
- LADDER
- TIME CODE GEN
- DIFAR
- UHF-2
- SONOBUOY RECEIVERS
- UTILITY RECEPTACLES
- SONO JB
- SS1 & 2 LIGHTING
- EDGE LIGHTING (TACCO STATION)

Table 3-1.—P3C AC Bus Distribution—Continued

ELECTRONICS NO. 3 FEEDER
- LOGIC UNITS (1, 2 AND 3)
- MAG TAPE TRANSPORTS
- UNIVERSAL KEYSETS
- MULTIPURPOSE DISPLAYS
- AUX READOUTS
- SIGNAL DATA CONVERTER
- SCAN CONVERTER
- ORD IND PANEL
- PILOT KEYSET LIGHTS
- COMPUTER
- RADAR INTERFACE

FLIGHT ESSENTIAL AC BUS
- APU-141 RADAR ALTIMETER
- IFF TRANSPONER PWR
- ATTD IND, VERT GYRO
- LH PITOT HEATER
- FDI (PILOT AND COPILOT)
- OUTFLOW VALVE OVERRIDE
- PILOT AND COPILOT READ INST LTS
- ATTD IND, GYRO HORIZON
- GYRO HORIZON (STANDBY)

MAIN AC BUS B
- AFT FUEL TRANSFER PUMP
- CABIN EXHAUST FAN
- EMPENNAGE DEICING (CYCLE POWER)
- FEATHER PUMPS (ENG. NO. 1 AND 4)
- FLOOR HEATERS
- HEAT EXCHANGER FANS
- FUEL BOOST PUMP NO. 2 AND NO. 4
- GALLEY POWER
- HYDRAULIC PUMP NO. 1A AND NO. 2
- PROPELLER ICE POWER AND TEST
- SERCIVE OUTLETS
- WALL HEATERS
- XMFR RECT NO. 2

AFT LIGHT TRANSFORMER
- BOMB BAY, LAV AND GALLEY LIGHTS
- SERVICE AND CIRCUIT BREAKER PANEL LIGHTS
- 28V AC LIGHTING BUS
- ROTATING BEACONS

distribution system in the P-3C aircraft. Many of these systems are not applicable to other Naval aircraft. As such it would be inappropriate to have the same bus system in all types of aircraft. The following is a discussion of a representative power distribution system used in the P-3C.

P-3C POWER DISTRIBUTION

The P-3C contains four identical and interchangeable 115-volt, 400-Hz, 60-KVA generators. Three of the generators are identified as No. 2, No. 3, and No. 4 to correspond to the aircraft engine they are mounted on (the No. 1 engine does not have a generator). The fourth generator is installed on an aircraft-mounted auxiliary power unit (APU) and is called the APU generator. Voltage and frequency control and fault protection of each generator is provided by individual supervisory panels. Operation of these panels is discussed in Chapter 7 of *Aviation Electrician's Mate 3 and 2*, NAVEDTRA 10348-D. AC power can also be supplied by an external source through the use of an external power receptacle.

Three identical transformer-rectifiers (TR) and a 24-volt battery supply the dc power for the aircraft. TRs No. 1 and 2 are capable of supplying dc power for the entire aircraft, but TR No. 3 may supply dc power only for the essential bus. Input to the TRs is 115-V, 400-Hz, 3-phase from the ac generators. The battery provides emergency power and is able to supply an inverter which supplies ac power to certain critical instruments. The battery can also be used to start the APU.

Bus Logic

In the P-3C, there are three steps in the priority system for the ac buses, plus one special-purpose bus. The bus priorities are assigned in the following order:

1. FLIGHT ESSENTIAL AC BUS
2. MONITORABLE ESSENTIAL AC BUS
3. MAIN AC BUS

The special-purpose bus is called the START ESSENTIAL AC BUS and powers only the Turbine Inlet Temperature indicators. The bus must be available not only during start but any time the engines are operating, as the TIT indicators monitor the operation of the engines. The engines will still operate without this bus being hot, but an important means of monitoring engine performance is lost. The engine temperature must be monitored during starts so that an overtemperature does not occur and cause damage to the engine or start a fire in

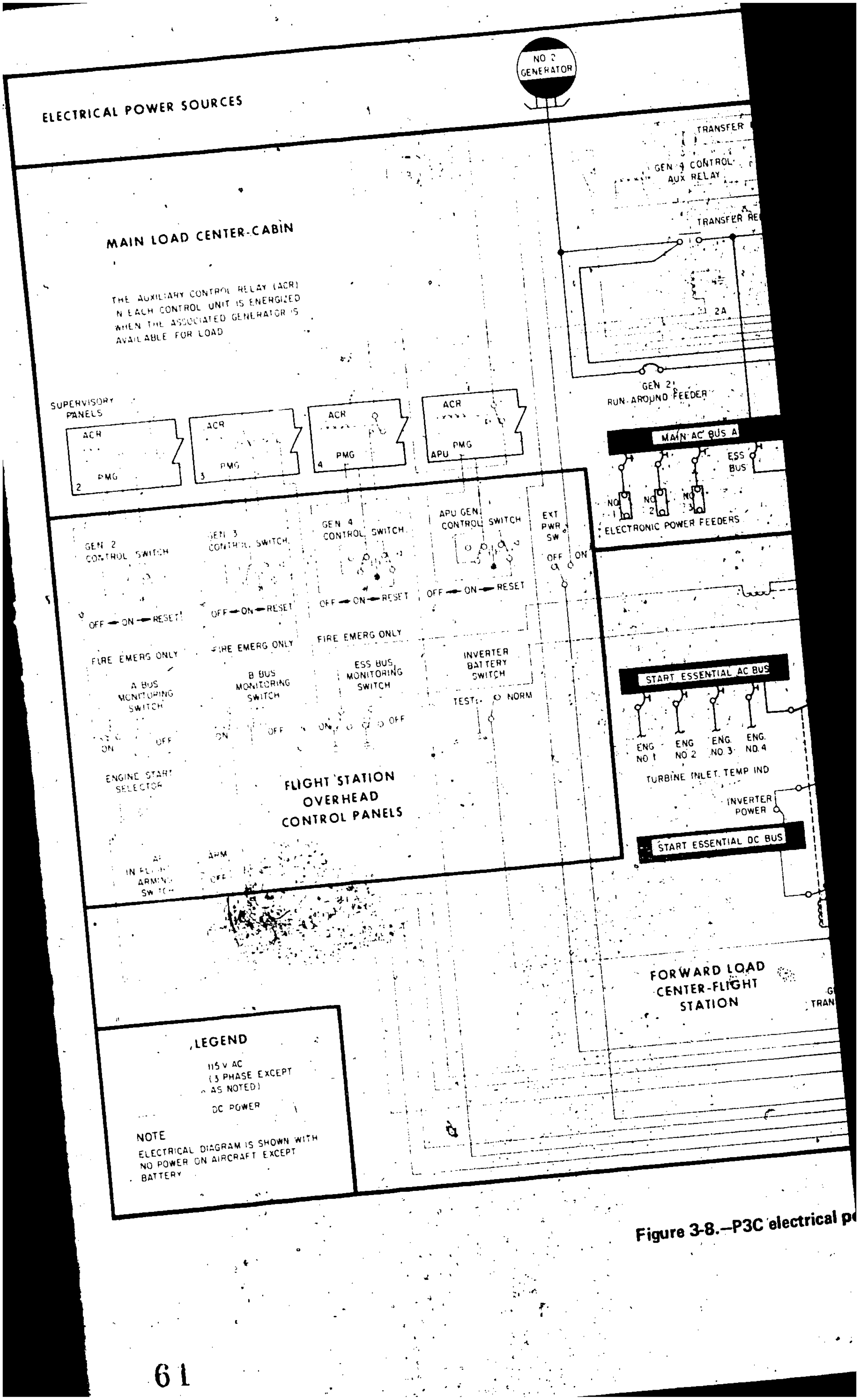

Figure 3-8.—P3C electrical p

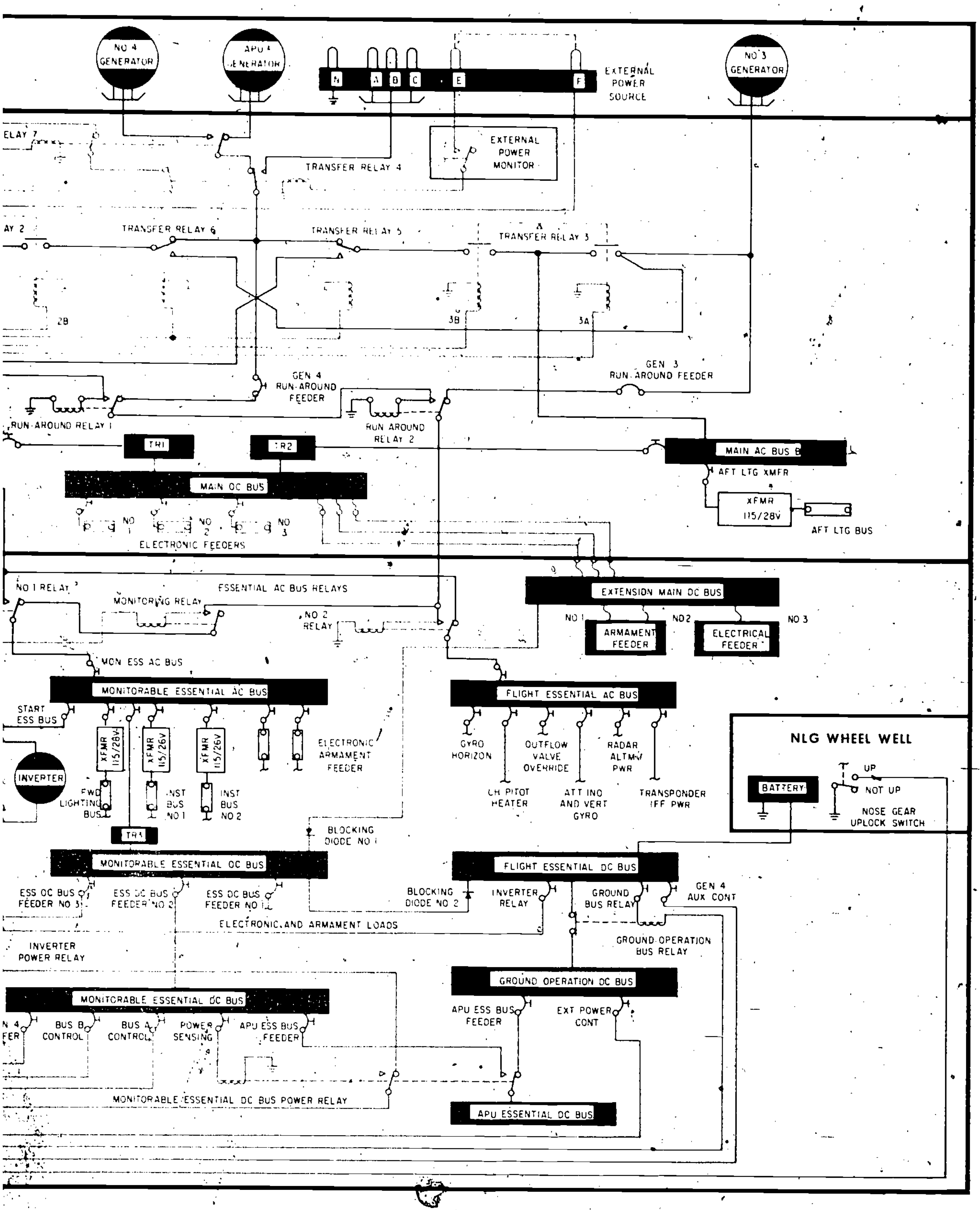

208.271

wer distribution system.

Table 3-2.–P3C DC Bus Distribution

MONITORABLE ESSENTIAL DC BUS
- AMAC POWER AND CONTROL
- AIR CONDITIONING BLOWER CONTROL (L AND R)
- ANGLE OF ATTACK
- AIR MULTIPLIER VALVE
- APU ESSENTIAL BUS FEEDER
- AUX VENT
- BOMB BACK LOCK POWER
- BUS A AND BUS B CONTROLS
- COMPASS LIGHT
- CONSOLE (PILOT, COPILOT RED EDGE)
- EDC DISCONNECT L AND R
- EDC DUMP L AND R
- EMER ENGINE SHUTDOWN CONTROL 1, 2, 3, 4
- ENGINE ICE CONTROL
- FIRE DETECTORS
- FIRE DETECTOR HORN
- FIRE EXTINGUISHER SYSTEM
- FLIGHT IDLE STOPS
- GENERATOR 2, 3, AND 4 CONTROLS
- GENERATOR 4 TRANSFER
- HYDRAULIC PUMP NO. 1A CONTROL
- NESA WINDSHIELD L AND R
- OIL TANK SHUTOFF VALVE CONTROL
- POWER SENSING
- PROP FEATHER CONTROLS NO. 1 AND NO. 4
- RUDDER BOOST SHUTOFF VALVE
- WARNING LIGHTS (RED)
- IFF TRANSPONDER CONTROL PWR
- IFF TEST SET
- SIGNAL LIGHTS
- TURN RATE GYRO (PILOT AND COPILOT)
- RAWS (1 AND 2 TEST)
- ICS AND LIGHTS (PILOT, COPILOT)
- FLIGHT DIRECTOR

ELECTRONIC PWR NO. 1
- COMM SYS SEL
- NAV INTER BOX
- CENTRAL REPEATER SYS
- DATA LINK (DATA TERMINAL SET)

ELECTRONIC PWR NO. 2
- TACCO STA FLOOD LIGHTS
- TAS
- HF-1
- TACAN
- VHF/VOR-2 RECEIVER/TRANSMITTER
- VOR-1 RECEIVER
- INTERPHONE
- DOPPLER RADAR
- UHF-1
- UHF SECURE VOICE
- HF SECURE VOICE
- INS-1
- ALTIMETER VIB–(PILOT AND COPILOT)

ARMAMENT JETTISON
- BOMB BAY DOOR CONT
- BOMB BAY STORES
- JETTISON CONTROL
- LEFT WIND JETTISON
- RIGHT WING JETTISON

APU ESSENTIAL DC BUS
- DOOR POS LIGHT
- EXH DOOR ACT.
- FIRE DET. HORN
- FIRE EXTINGUISHER
  - –AUTO CONTROL
  - –AUTO RELEASE
  - –MANUAL CONTROL

APU ESSENTIAL DC BUS–Continued
  - –MANUAL RELEASE
- INTAKE DOOR ACTUATOR

START ESSENTIAL DC BUS
- PRIMER CONTROL
- FUEL AND IGNITION CONTROL
- START CONTROL
- FUEL SHUTOFF VALVES
- TEMP DATUM CONTROL
- BLEED AIR FIREWALL SHUTOFF VALVES
- FUSELAGE BLEED AIR ISOLATION VALVES
- INVERTER POWER

GROUND OPERATION DC BUS
- APU CONTROLS
- EXTERNAL POWER
- HYDRAULIC PUMP CONTROL NO. 1B
- HYDRAULIC PUMP POWER NO. 1B
- OIL QUANTITY INDICATORS

FLIGHT ESSENTIAL DC BUS
- IFF EMERGENCY CONTROL/ZERO POWER
- COMMAND BELL
- FLIGHT STATION UTILITY LIGHTS
- GEN 4 AUX CONT
- GRND OPER BUS RELAY
- INVERTER RELAY
- PROPELLER PITCHLOCK RESET
- TURN RATE GYRO (PILOT)
- SECURE VOICE ZERO

MAIN DC BUS
- RACK OVERHEAT
- BOMB BAY HEAT CONTROL
- CABIN EXHAUST FAN CONTROL
- COUNTING ACCEL
- DUCT OVERHEAT TEST
- EMPANNAGE DEICING CONTROL
- EXTERIOR LIGHTS
- FIRE EXTINGUISHER CONTROL (ALT.)
- FREE AIR TEMPERATURE INDICATION
- FUEL BOOST AND TRANSFER PUMPS CONTROL
- FUEL DUMP SWITCH AND DUMP VALVE
- FUEL INLET VALVES AND REFUEL CONTROL
- FUEL QUANTITY SYS TEST
- GROUND AIR SENSING
- HYDRAULIC FLUID QUANTITY
- HYDRAULIC PUMP CONTROL NO. 1 AND NO. 2
- LANDING GEAR CONTROL
- LANDING GEAR INDICATION AND WARNING
- L AND R FLAP BK
- LATCH AND RELEASE
- LOAD MONITORING CONTROL
- LOAD MONITORING RELAYS
- LOW RPM SOLENOID
- NEGATIVE TORQUE SYSTEM CHECK
- OIL QUANTITY AND TEMP INDICATORS
- PROPELLER AND WING ICE CONTROL
- PROPELLER AUTOFEATHER
- PROP FEATHER CONTROLS NO. 2 AND NO. 3
- PILOTS DISPLAY CONTROL
- PROP SYNC
- UTILITY RECEPTACLES
- SIDE WINDSHIELD HEAT CONTROL
- ROTATING BEACONS

ARMAMENT
- ARMAMENT POWER
- BOMB BAY DOORS
- KILL STORES
- KILL POWER RELAY

Table 3-2.—P3C DC Bus Distribution—Continued

ARMAMENT—Continued
- SEARCH STORES
- SEARCH POWER RELAY
- TORPEDO
- SONO RELEASE LH & RH
- KILL STORES POWER (LW, RW, AND BOMB BAY)

MAIN DC ELECTRONIC FEEDER NO. 1
- FWD CAMERA
- AFT CAMERA
- ADF
- UHF GLIDESLOPE
- DATA LINK
- TACCO STA LIGHT IND
- TACTICAL DISPLAY PILOT
- DPS PWR DIST BOX
- COMPUTER ALT

MAIN DC ELECTRONIC FEEDER NO. 2
- DIFAR
- SS1 AND 2 LIGHTS
- SONO TAPE RECORDER

MAIN DC ELECTRONIC FEEDER NO. 2—Continued
- SONO JUNCTION BOX

MAIN DC ELECTRONIC FEEDER NO. 3
- LADDER CONTROL
- INS-2 CONT
- EDGE LIGHTS LH & RH OBS STA
- SEARCH RADAR
- ECM
- IFF INTERROGATOR
- LLLTV SERVO
- HF-2
- BIT RECORDER
- MAD
- SAD
- AUTOPILOT
- OTPI
- UHF DF
- MKR BEACON
- SS-3 LIGHTS
- NAV/COMM LIGHTS
- UHF-2

the nacelle. Even if all four generators fail, the START ESSENTIAL AC BUS can still be powered from the aircraft battery through the use of an emergency inverter. By enabling the bus to be powered by the battery, engine starts may be accomplished even when no external source of electrical power (or APU) is available.

The FLIGHT ESSENTIAL AC BUS powers equipment that is necessary for the safe operation of the aircraft (table 3-1). (The aircraft can be flown, under emergency conditions, even without the FLIGHT ESSENTIAL AC BUS.) The FLIGHT ESSENTIAL AC BUS can receive power from any operational generator, but is the last bus to lose power when a multiple ac generator failure occurs. The equipment it supplies is primary for aircraft operation under certain operational conditions.

The MONITORABLE ESSENTIAL AC BUS powers systems and equipment that are essential for the efficient operation of the aircraft. Operation of this bus is necessary for the aircraft to complete its mission. It supplies all primary navigation and communications systems. If the bus loses power, the aircraft must land at the nearest available airport.

There are two MAIN AC buses in the P-3C—MAIN AC BUS A and MAIN AC BUS B. These two buses have the same priority and power high usage and "nice to have" systems and equipment; i.e., back-up communications and navigation systems, deicing systems, and hydraulic pumps. These systems are the least necessary, or would be the most damaging to the electrical power system should a failure occur. They are last on the priority list.

The three major buses in the dc power distribution system have the same priorities assigned as the ac system. The FLIGHT ESSENTIAL DC BUS has the highest priority, the MONITORABLE ESSENTIAL DC BUS the second highest priority, and the MAIN DC BUS has the lowest priority. With the generators operating, the FLIGHT ESSENTIAL DC BUS is connected to both the MONITORABLE ESSENTIAL DC BUS (rectified ac generator power or external ac power) and to the battery. Since the battery voltage is less than the rectified ac voltage, the battery is kept in a charged state; and if the generated voltage fails, the battery will take over automatically.

There are three special-purpose buses in the dc power distribution system. The START ESSENTIAL DC BUS is the most important of these and powers equipment necessary to start the aircraft engines. If the generated dc voltage fails, or if the APU and an external source of electrical power is not available to start the engines, the START ESSENTIAL DC BUS may be powered from the battery.

The equipment supplied by the GROUND OPERATION DC BUS is necessary only when the aircraft is not airborne. It is powered by either the battery or by rectified ac until the nosegear uplock switch is actuated. In order to receive external electrical power, or to start the APU, this bus must be hot.

The APU ESSENTIAL DC BUS is powered by the MONITORABLE ESSENTIAL DC BUS whenever that bus is hot. The APU ESSENTIAL DC BUS may also be powered by the GROUND OPERATION DC BUS so that the APU may be started from the battery. The controls for operation of the APU are powered from the GROUND OPERATION DC BUS. However, shutdown and emergency power for the APU, such as fire detection, fire extinguishing and exhaust door operation, must be available even if the GROUND OPERATION DC BUS is lost.

Operation

With only the battery connected and no other power applied to the aircraft, the FLIGHT ESSENTIAL DC, the GROUND OPERATION DC, and the APU ESSENTIAL DC buses are hot (see fig. 3-8). By having these three buses powered, (1) power is enabled from an external source, (2) the APU may be started and electrical power supplied through its generator, or (3) the aircraft engines may be started and electrical power supplied from them. The aircraft battery alone should not be used to start the engines except in an extreme emergency. Since pneumatic power is also required to start the engines, an external source of air is required even though the aircraft battery can be used as the only source of electrical power.

EXTERNAL POWER.–When an external source of power is applied to the aircraft, dc power is taken from the GROUND OPERATION DC BUS external power control circuit breaker and supplied to the external power switch on the flight station overhead control panel. When the external power switch is placed in the ON position, dc power is supplied through shorted pins E and F in the external power cable to the external power monitor. When the voltage, frequency, and phase relationship are within tolerance, the monitor will supply power to the coil of transfer relay No. 4.

When transfer relay No. 4 energizes, its contacts supply 3-phase ac power through deenergized contacts of run-around relay No. 1, energizing run-around relay No. 2. The energized contacts of run-around relay No. 2 supply power to energize the essential ac bus relay No. 2 and the essential ac bus monitoring relay (on the condition that the essential bus monitoring switch on the flight station overhead control panel is in the ON position). The No. 2 relay supplies power to the FLIGHT ESSENTIAL AC BUS. The monitoring relay supplies power to the MONITORABLE ESSENTIAL AC BUS and, through deenergized contacts of the inverter power relay, to the START ESSENTAIL AC BUS.

DC power is then developed by TR-3 from monitorable essential ac power to supply the MONITORABLE ESSENTIAL DC BUS. The MONITORABLE ESSENTIAL DC BUS supplies power through Blocking Diode No. 2 to the FLIGHT ESSENTAIL DC BUS and the GROUND OPERATION DC BUS. The APU ESSENTAIL DC BUS is powered from the MONITORABLE ESSENTIAL DC BUS through energized contacts of the power-sensing relay. The START ESSENTIAL DC BUS is also powered from the MONITORABLE ESSENTIAL DC BUS through deenergized contacts of the Inverter Power Relay. Blocking Diode No. 1 prevents current from flowing to the main dc buses.

Power is supplied from the bus A control circuit breaker on the MONITORABLE ESSENTIAL DC BUS, through the A Bus Monitoring Switch, through the deenergized contacts of the Auxiliary Control Relay (ACR) in the #2 generator supervisory panel, to the 2B coil of Transfer Relay 2. The armatures of transfer relays No. 2 and No. 3 are pivoted so that only one set of contacts (i.e. 2A or 2B) may be made at any one time. When power is removed, the contacts return to the position shown. External electrical power is routed through energized contacts of Transfer Relay 4, through deenergized contacts of Transfer Relay 6, and energized (2B) contacts of Transfer Relay

2 to the MAIN AC BUS A. Transformer-rectifier 1 then develops the dc power to supply the MAIN DC BUS.

The bus B control circuit breaker supplies power through the B Bus Monitoring Switch, through the No. 3 generator supervisory panel, to the 3B coil. External power is then supplied through Transfer Relays 4, 5, and 3B to the MAIN AC BUS B. TR 2 changes the MAIN AC BUS B power to dc and also supplies the MAIN DC BUS. At this time all of the power distribution buses are being powered.

APU GENERATOR.–When the APU is started, the APU supervisory panel controls and monitors the operation of the generator. When the generator is able to accept the load, the ACR (auxiliary control relay) energizes, opening the contacts that supply power to the Gen. 4 Control Aux Relay. Deenergizing Gen. 4 Control Aux Relay, deenergizes the Transfer Relays 5 and 6.

If generator No. 4 is not available (Transfer Relay 7) and no external power is applied (Transfer Relay 4), power is supplied to the run-around relays. Assuming that generator No. 2 is not available, Run-around Relay 1 will be deenergized, and ac voltage from the APU generator will energize Run-around Relay 2, supplying power to the essential ac buses and the dc buses. The bus A and B control circuit breakers on the MONITORABLE ESSENTIAL DC BUS supply power through the bus A and B monitoring switches to the B side of Transfer Relays 2 and 3. The APU generator then powers all ac and dc buses.

GENERATOR NO. 2.–When generator No. 2 is available for load, the ACR relay in the No. 2 generator supervisory panel energizes. Rectified dc power from the PMG is supplied through the Bus A Monitoring Switch and through closed contacts of the ACR relay in the supervisory panel to the 2A side of Transfer Relay 2. Transfer Relay 2 supplies power to MAIN AC BUS A. With the Essential Bus Monitoring Switch on the flight station overhead panel in the ON position, Essential AC Bus Relay 1 energizes, and MAIN AC BUS A supplies power to the MONITORABLE ESSENTIAL and START ESSENTIAL AC buses. TR 1 supplies the MAIN DC BUS from the MAIN AC BUS A, and TR3 supplies the essential dc buses from the MONITORABLE ESSENTIAL AC BUS.

The ac voltage from generator No. 2 energizes Run-around Relays 1 and 2 to supply power to the FLIGHT ESSENTIAL AC BUS. Current from the Gen 4 Transfer circuit breaker on the MONITORABLE ESSENTIAL DC BUS flows through the deenergized contacts of the ACR relay in the APU supervisory panel (APU not available), through deenergized contacts of Transfer Relay 7 (generator No. 4 not available), through deenergized contacts of Transfer Relay 4 (external power not available) to energize Gen 4 Control Aux Relay. Power from the energized contacts of Gen 4 Control Aux Relay energizes Transfer Relays 5 and 6. Generator 2 power is then supplied through energized contacts of Transfer Relay 5, through energized Transfer Relay 3B (energized by dc power from the Bus B Control circuit breaker on the MONITORABLE ESSENTIAL DC BUS) to the MAIN AC BUS B. TR 2 provides a parallel or backup source of dc power for the MAIN DC BUS from the MAIN AC BUS B.

GENERATOR NO. 3.–Generator No. 3 supplies power to any or all of the ac and dc buses, just as any of the other generators. If it is the only operating generator, it supplies power to the MAIN AC BUS B via the A contacts of Transfer Relay 3. FLIGHT ESSENTIAL AC receives its power through deenergized contacts of Run-around Relay 2 and energized contacts of Essential AC Bus Relay 2. The MAIN AC BUS A, MONITORABLE ESSENTIAL AC, START ESSENTIAL AC, and all of the dc buses (from their appropriate TRs) are powered through Transfer Relay 6 and the B side of Transfer Relay 2.

If both generators No. 2 and 3 are operating, generator No. 2 supplies the FLIGHT ESSENTIAL AC BUS through the run-around relays. Generator No. 2 also supplies the MAIN AC BUS A, the MONITORABLE ESSENTIAL AC BUS, START ESSENTIAL AC BUS, and all the dc buses through the appropriate TRs. Generator No. 3 supplies only the MAIN AC BUS B and the MAIN DC BUS (through TR 2).

GENERATOR NO. 4.—Generator No. 4 is the standby generator. When generators 2 and 3 are supplying the load, generator 4 is available but does not feed any bus. When generator 4 is available to supply a load, the ACR relay in its supervisory panel energizes. The Gen 4 Aux Cont circuit breaker on the FLIGHT ESSENTIAL DC BUS supplies power through the energized contacts of the ACR relay to energize Transfer Relay 7. Energized contacts of Transfer Relay 7 prevent Transfer Relays 5 and 6 from being energized. Transfer Relay 7 also gives generator 4 priority over the APU generator.

In the normal flight condition, generators 2, 3, and 4 are operating and the APU is shut down. If generator 2 fails in flight, generator 4 will assume its load. The ACR relay in the generator 2 supervisory panel deenergizes and removes power from Transfer Relay coil 2A. Deenergized contacts of the ACR relay connect power from the Bus A Control circuit breaker on the MONITORABLE ESSENTIAL DC BUS to the 2B coil. AC power is connected through Transfer Relay 6 and the B contacts of Transfer Relay 2 to MAIN AC BUS A, and through contacts of the Essential AC Bus Relay 1 to the MONITORABLE ESSENTIAL AC BUS and the START ESSENTIAL AC BUS. Run-Around Relay 1 also deenergizes when generator 2 fails. Deenergized contacts of Run-Around Relay 1 connect generator 4 to the FLIGHT ESSENTIAL AC BUS.

Assuming that the three engine-driven generators are operating normally and generator 3 fails—generator 4 takes over the load for generator 3. Generator 4 supplies power through deenergized contacts of Transfer Relay 3B to the MAIN AC BUS B. Generator 2 supplies all other buses.

In the event that both generators 2 and 3 fail in flight, generator 4 will supply the entire electrical load for the aircraft through the same relays that were discussed earlier for operation with external power and the APU. When either generator 2 or 3 fails, the APU may be started to provide an additional electrical power source in the event generator 4 fails.

If generator 4 is the only generator available in flight, the APU is started as a backup for generator 4. Under this condition, generator 4 supplies the entire electrical load and the APU remains as a backup only. If generator 4 fails, the entire electrical load is switched immediately to the APU generator.

In the event that all four generators fail in flight, the Inverter Battery Test Switch may be held in the test position, or the engine start selector may be positioned to any engine, to energize the inverter power relay. Battery power is then supplied from the FLIGHT ESSENTIAL DC BUS through the Inverter Power Relay contacts to the START ESSENTIAL DC BUS. The START ESSENTIAL AC BUS is powered from the emergency inverter and contacts of the Inverter Power Relay.

ELECTRICAL FIRE EMERGENCIES.—Fires in flight can be very hazardous, and electrical fires may be extremely hard to find. In the event of a fire in flight, the Bus Monitoring switches and the generator control switches on the flight station overhead panel may be turned off in a sequence to isolate certain portions of the electrical distribution system.

The A Bus Monitoring Switch is first to be turned OFF, which interrupts dc power to Transfer Relay 2, removing power from MAIN AC BUS A and disabling TR 1. The Essential AC Bus Relay 2 deenergizes and connects generator 2 power from the run-around relays to the MONITORABLE and START ESSENTIAL AC buses. TR 2 continues to power the MAIN DC BUS from the MAIN AC BUS B. Only MAIN AC BUS A is lost.

If the fire does not stop or is still not located, the B Bus Monitoring Switch is turned OFF. Power to Transfer Relay 3 is removed, which disables MAIN AC BUS B and TR 2. Since TR 1 was disabled when the A Bus Monitoring Switch was turned OFF, the MAIN DC BUS is disabled. Generator 2 continues to supply the essential ac buses through the run-around relays. TR 3 powers the essential dc buses, is prevented from supplying the MAIN DC BUS by Blocking Diode No. 1. Generator 3 and 4 are not connected to any bus at this time; however, all three generators are supplying ac power from their respective engine nacelles up to the transfer relays which are located in the cabin area.

The next step is to turn off the control switches for generators 2 and 3, which removes the field voltage from the generators. This shuts off the generator voltage at the generator rather than in the cabin. When generator 2 is not available, Run-Around Relay 1 deenergizes to pick up the generator 4 voltage to supply the essential ac and dc buses.

The next step is to turn off the Essential Bus Monitoring Switch. This deenergizes Essential AC Bus Relay 1 and Monitoring Relay, which removes power from the MONITORABLE and START ESSENTIAL AC BUSES and from TR 3. The FLIGHT ESSENTIAL AC BUS is supplied by generator 4 through deenergized Run-Around Relay 1, Run-Around Relay 2, and energized Essential AC Bus Relay 2. When power is removed from TR 3, power is also lost to the MONITORABLE ESSENTIAL, START ESSENTIAL, and APU ESSENTIAL DC BUSES. The battery supplies uninterrupted power to the FLIGHT ESSENTIAL DC BUS; however, while the aircraft is still airborne, the Ground Bus Relay remains energized and the GROUND OPERATION DC BUS is without power. Blocking Diode 2 prevents the FLIGHT ESSENTIAL DC BUS from powering the other essential dc buses.

The final step in securing electrical power is to turn generator 4 OFF. The Generator 4 Control Switch in the OFF position removes the generator field excitation, which stops current flow at the generator and removes power from the FLIGHT ESSENTIAL AC BUS. The only possible ac power is from the emergency inverter to the START ESSENTIAL AC BUS when an engine is selected with the Start Selector Switch, or if the Inverter Test Switch is placed in the TEST position. DC power is available to the FLIGHT ESSENTIAL AC BUS only; however, battery power may be supplied to the GROUND OPERATION DC BUS and APU ESSENTIAL BUS and/or START ESSENTIAL DC BUS.

CHAPTER 4

AIR DATA COMPUTER SYSTEMS

Aircraft that operate below an airspeed of approximately 0.9 Mach are able to use raw pitot and static pressures to develop sufficiently accurate indications of airspeed, altitude, and rate of climb. Aircraft operating in this speed range utilize the pressures that are sensed by the pitot-static ports.

Modern supersonic aircraft that operate in a much larger speed range require more accurate pressures; particularly in the high speed ranges where pressures are built up on the external skin of the aircraft. These pressures cause a distortion of the normal flow of air and cause false pressures to be sensed by the pitot-static system which then supplies erroneous information to the flight instruments. The altimeter, for instance, may indicate in excess of a 3,000-foot error. A 3,000-foot error in altitude is intolerable and could put an aircraft in an extremely dangerous position.

The systems used to compensate for altitude and other pitot-static errors is generally called air data computer systems (ADCS). Many variations exist in both the name of the systems and the methods in which the data is developed. The system used in the F-14 is strictly a digital computer system and is referred to as the central air data computer (CADC). The system used by the S-3 is called an airspeed altitude computer set (AACS), which is also a digital computer but very different from that in the F-14.

The system used in this manual to illustrate the operation of a typical air data computer is the one used in the F-4 Phantom II. This system uses an analog computer and is referred to as the central air data computer.

PRINCIPLES OF OPERATION

The central air data computer receives information from pressure-sensitive and temperature-sensitive units mounted on external points of the aircraft. It then compensates for inherent errors and transmits the corrected information to other systems in the aircraft. Concurrently, it detects any changes in pressure and temperature information and converts these into usable signals which are transmitted along with the pressure and temperature signals. The electrical signal outputs are representative of altitude, Mach number, true airspeed, angle of attack, total temperature, and impact pressure. There is also a pneumatic output of corrected static pressure, which is used by the cockpit instruments (barometric altimeter, airspeed and vertical speed indicators) and by some modules within the air data computer.

There are four data inputs supplied to the CADC—total pressure, indicated static pressure, indicated angle of attack, and total temperature. Command and test signal inputs use the available raw and corrected primary data for making functional tests of various CADC outputs. The complete input and output signal groups can be seen in figure 4-1.

Table 4-1 is a list of symbols referred to in this chapter, and their respective definitions. These symbols should be studied carefully to enable the reader to gain a complete understanding of the remainder of this chapter.

COMPONENTS

The central air data computer is an electromechanical analog computer, composed of a base assembly (chassis) and the computing

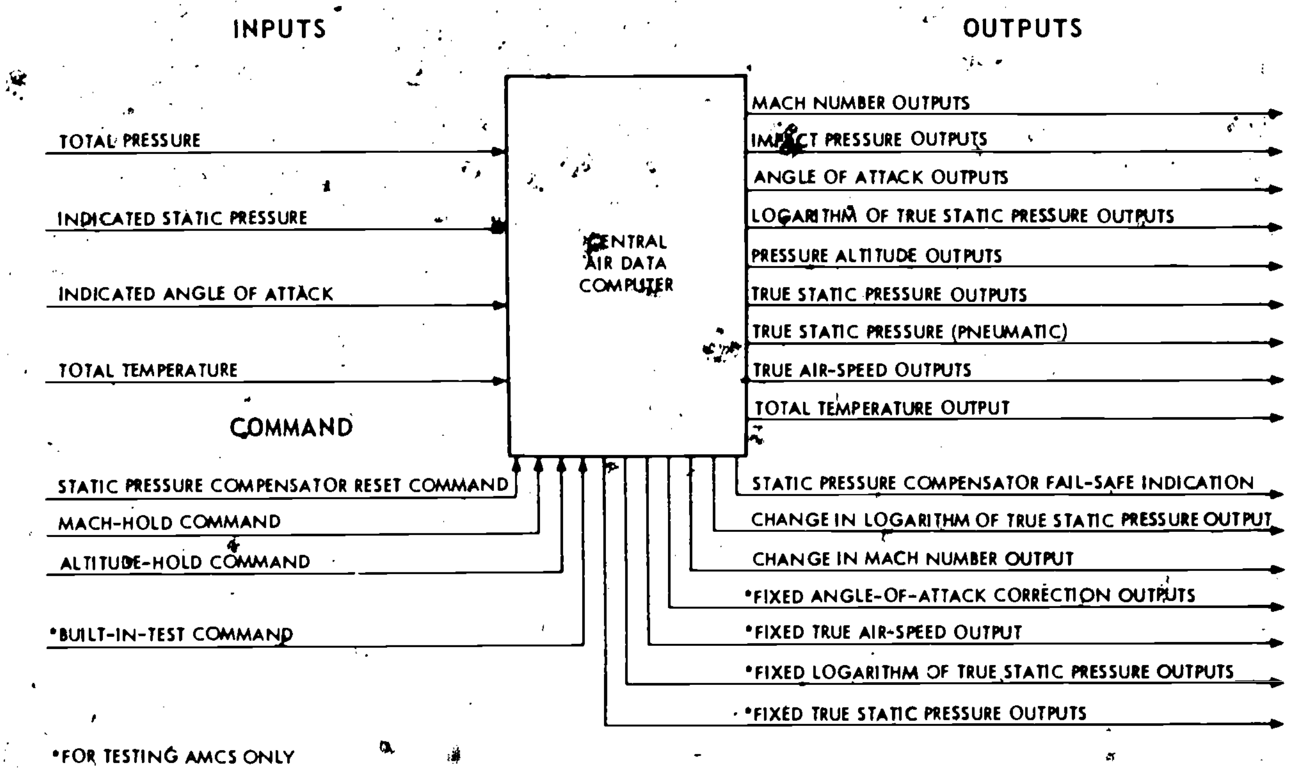

208.82

Figure 4-1.—CADC signal input and output data.

sections. The chassis contains all the interconnecting harnesses, and provides the housing for the modular computing sections. Six major modules and their associated amplifiers and circuitry are discussed in this chapter. The six major modules are

1. Static pressure compensator
2. Pressure ratio transducer
3. Logarithm pressure controller
4. Total temperature and true airspeed servo module
5. Mach sector assembly module
6. Computer gearbox module

The utilization of plug-in modules assures easier maintenance of the system. Figure 4-2(A) shows the top, rear view of the CADC; figure 4-2(B) shows the bottom view.

Both electrical and pneumatic power are required for operation of the CADC. The required electrical power is 115 volts, 400-Hz, 3-phase, and 28 volts dc. Other voltages are applied to output potentiometers within the CADC by the systems that require CADC data. Power is connected to the computer in such a way that should there be a power failure, the system will automatically provide incorrected outputs to the instruments and supported systems. This is called a fail-safe system and, when failure occurs, is indicated by a caution light in the cockpit. The pneumatic power required is from 14 to 250 psig, and is supplied by the engine.

INPUTS

Figure 4-3 shows part of the input data, the pitot-static system, in the F-4. Notice that all static pressure routed to the flight instruments must first pass through the CADC. This schematic shows pneumatic inputs only; both

Table 4-1.—Symbols used with CADC

Symbol	Definition
ADC	Air data computer
ADCS	Air data computer set
AEU	Altitude encoder unit
AMCS	Airborne missile control system
AOA	Angle of attack
APCS	Approach power compensator system
BIT	Built in test
α_i	Indicated angle of attack
α_T	True angle of attack
Δ	Incremental change
ERTT	Electrical resistance temperature transmitter
Hp	Barometric or pressure altitude
Ln	Natural logarithm
LnPs	Logarithm of true static pressure
LnQc	Logarithm of impact pressure
LPC	Log pressure controller
Mn	Mach number
Pa	Ambient pressure
Pe	Exhaust pressure
Pg	Regulated pressure
Po	Pressure in an evacuated bellows
Pr	Engine bleed air
PRS	Pressure ratio sensor
PRT	Pressure ratio transducer
Ps	True static pressure
Psi	Indicated static pressure
Pt	Total pressure
Pv	Regulated pressure (< ambient)
Qc	Impact pressure
θ_R	Ramp angle
SPC	Static pressure compensator
SPS	Static pressure sensor
T_T	Total temperature
Ve	Equivalent velocity

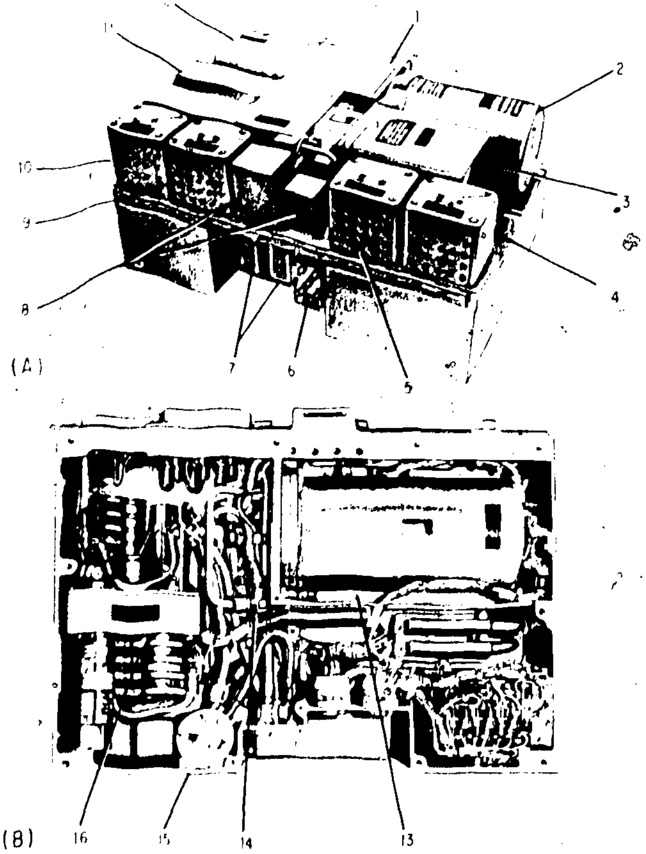

1. Gearbox module.
2. Pressure ratio transducer module.
3. Log pressure controller module.
4. Total temperature amplifier module.
5. True airspeed amplifier module.
6. Pneumatic connector.
7. Electrical connectors.
8. Power transformers.
9. Static pressure compensator amplifier module.
10. Log pressure controller amplifier module.
11. Gearbox potentiometer cover.
12. Mach sector assembly module.
13. Static pressure compensator module.
14. Jet ejector.
15. Pressure regulator.
16. Total temperature and true airspeed servo module.

208.81

Figure 4-2.—Central air data computer. (A) Top rear view; (B) bottom view.

pneumatic and electrical inputs are discussed below. The command inputs shown in figure 4-1, are discussed under operation later in this chapter.

Indicated Static Pressure

Indicated static pressure is the atmospheric pressure as sensed at a point on the aircraft which is relatively free from airflow disturbances. At subsonic speeds, static pressure error is small and of little significance; but at transonic and supersonic speeds, extreme static pressure errors are sensed at the static ports. The error magnitude is regarded as the ratio of true static pressure to indicated static pressure, as related to Mach number and angle of attack.

Total Pressure

Total pressure is the sum of static air pressure and the pressure created by the motion of the aircraft through the air. Total pressure is sensed by the pitot tube, which is the same as the more familiar term—pitot pressure. Total pressure is relatively free from error and is therefore uncorrected.

Total Temperature

Total temperature is the temperature of ambient air plus the temperature increase created by the motion of the aircraft. Total temperature is sensed by a platinum resistance element inside an aerodynamic housing placed in the airstream. The resistive element, whose resistance varies with temperature, acts as the variable portion of a bridge circuit.

Indicated Angle of Attack

The aircraft angle of attack is the angle of the aircraft in relation to the direction of motion of the aircraft. The angle-of-attack probe senses the angular direction of air relative to longitudinal datum line of the aircraft. The angle-of-attack input to the CADC is in the form of voltage per degree of indicated angle of attack.

OPERATION

The purpose of the central air data computer is to convert pneumatic pressures from the pitot-static systems into usable electrical or pneumatic signals and mechanical gear positions

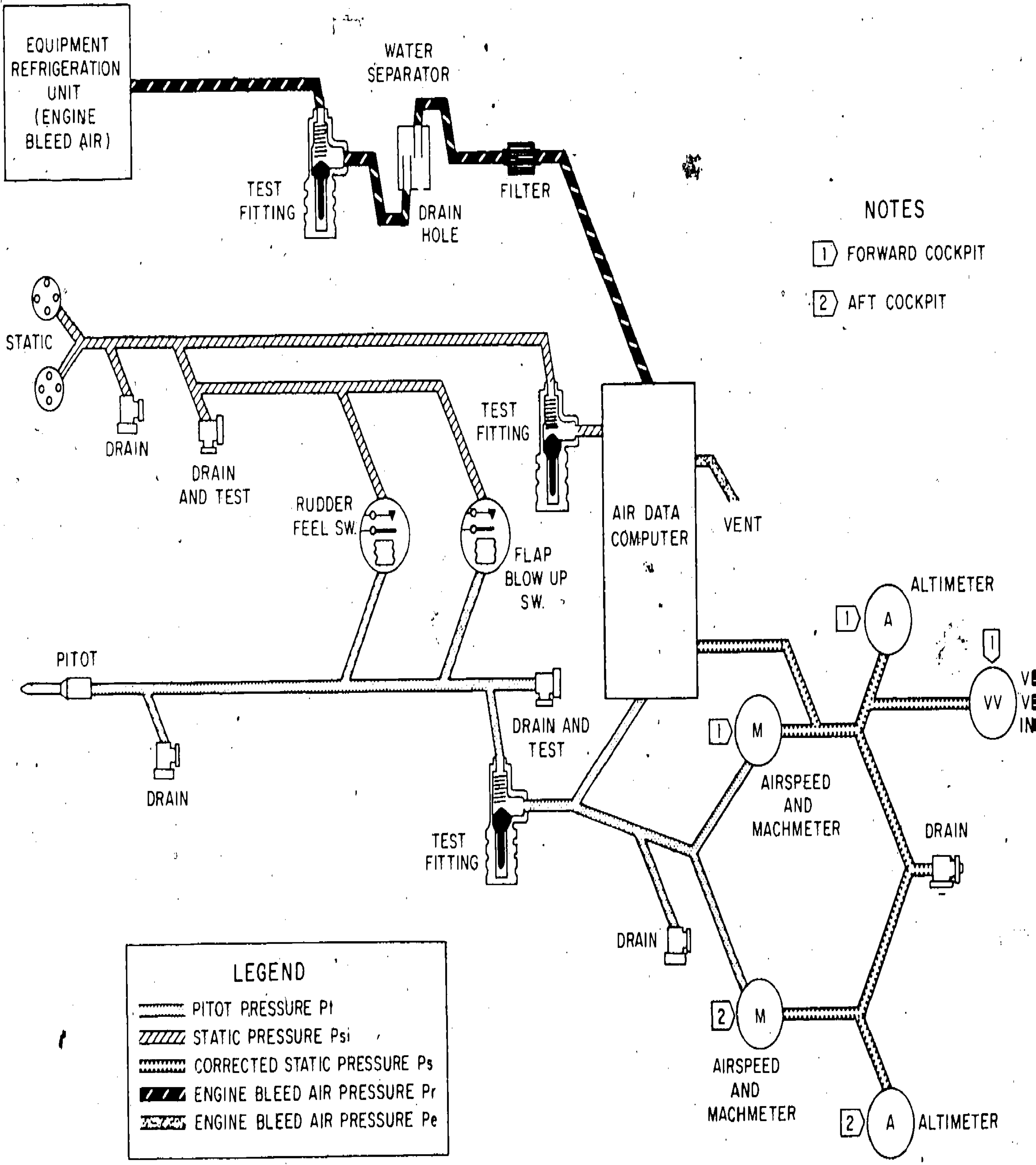

Figure 4-3.—Pitot-static inputs.

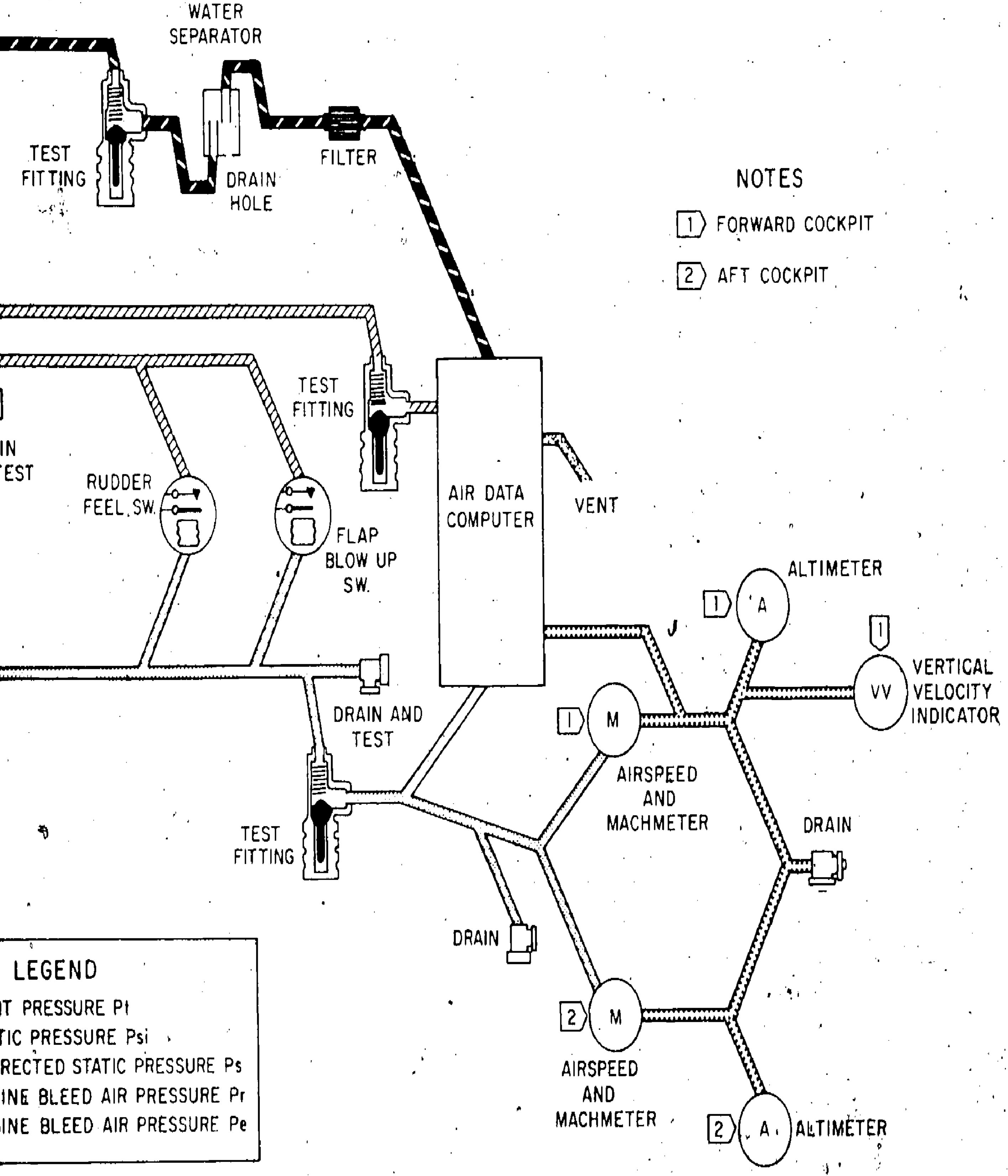

208.274

Figure 4-3.—Pitot-static inputs.

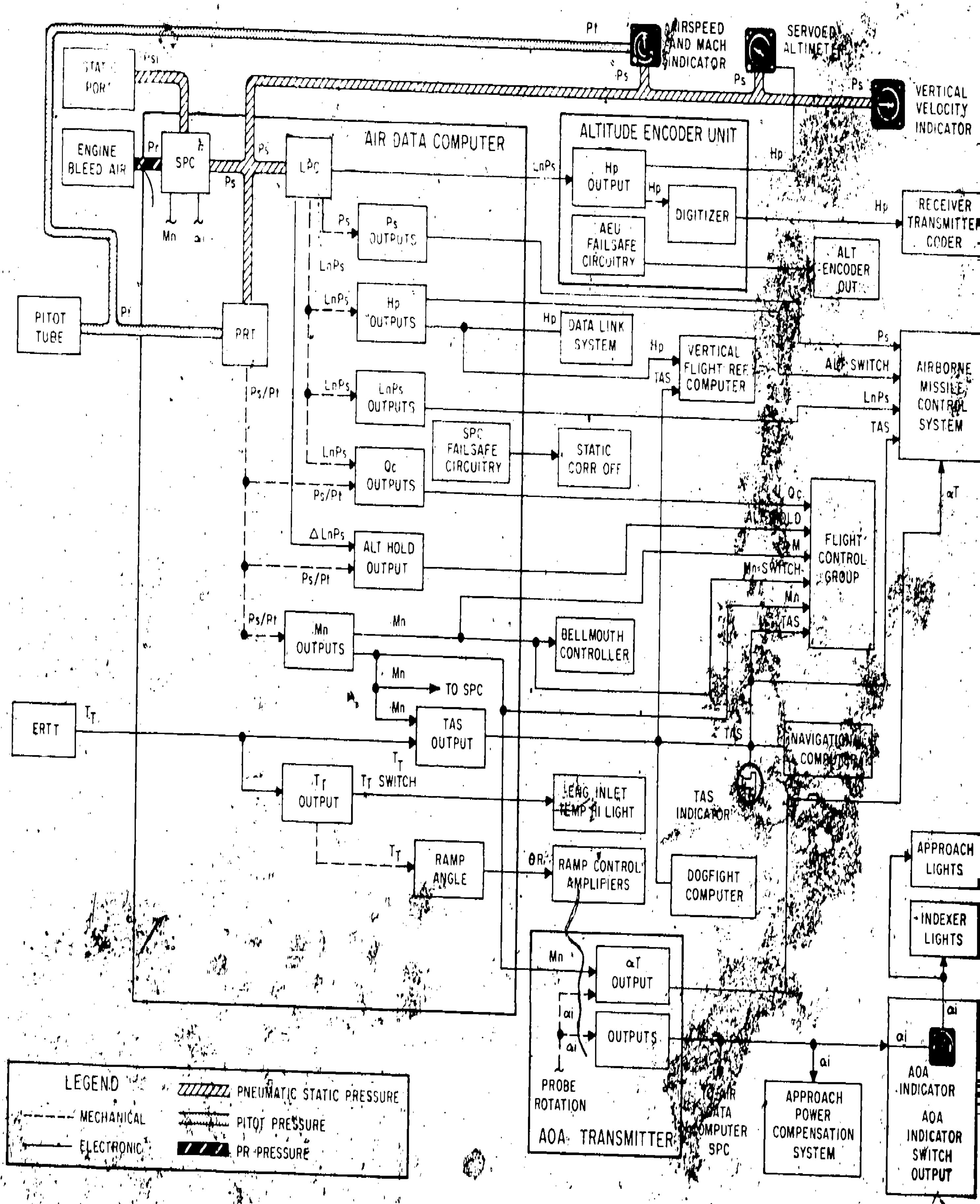

Figure 4-4.—CADC data flow diagram.

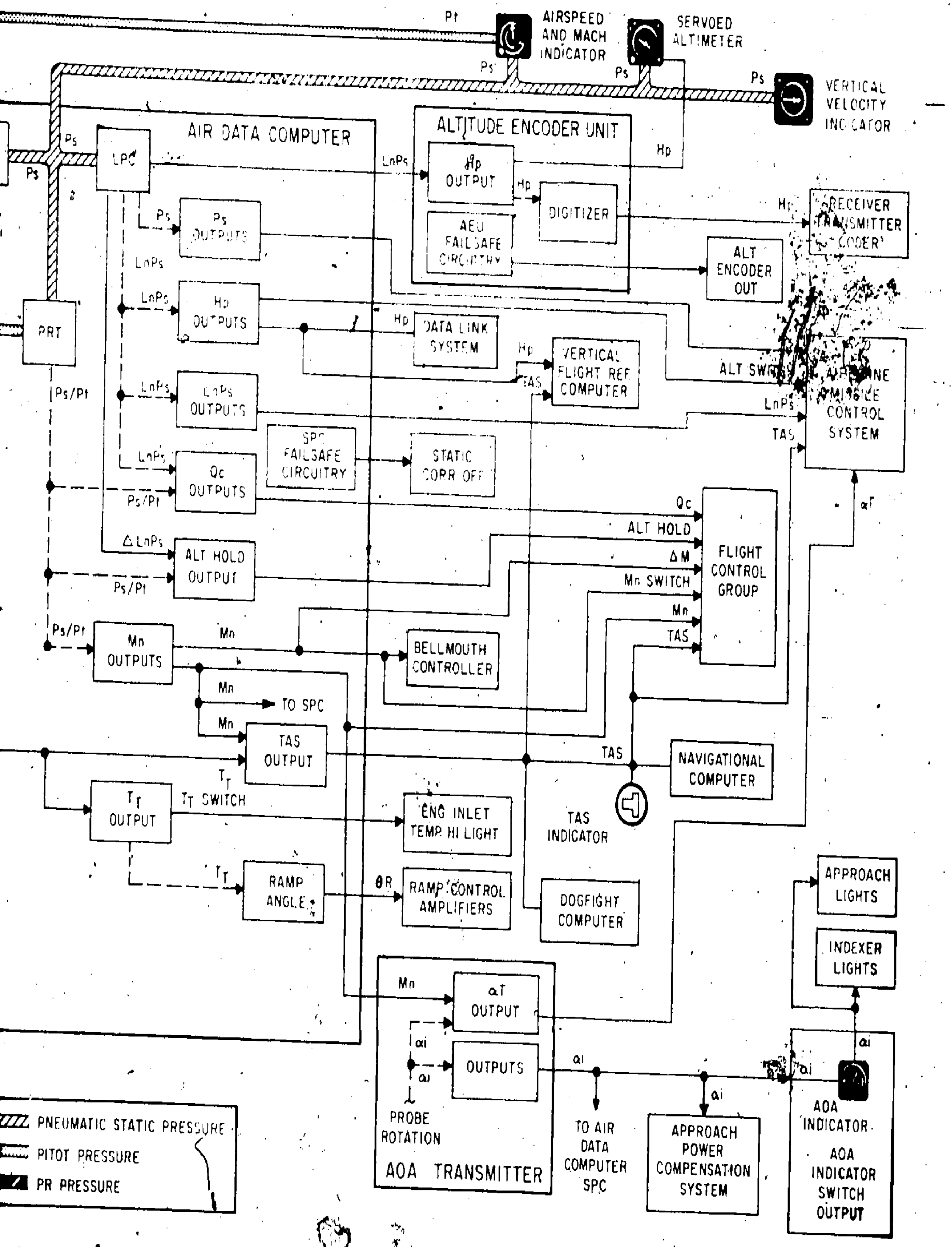

208.83

Figure 4-4.—CADC data flow diagram.

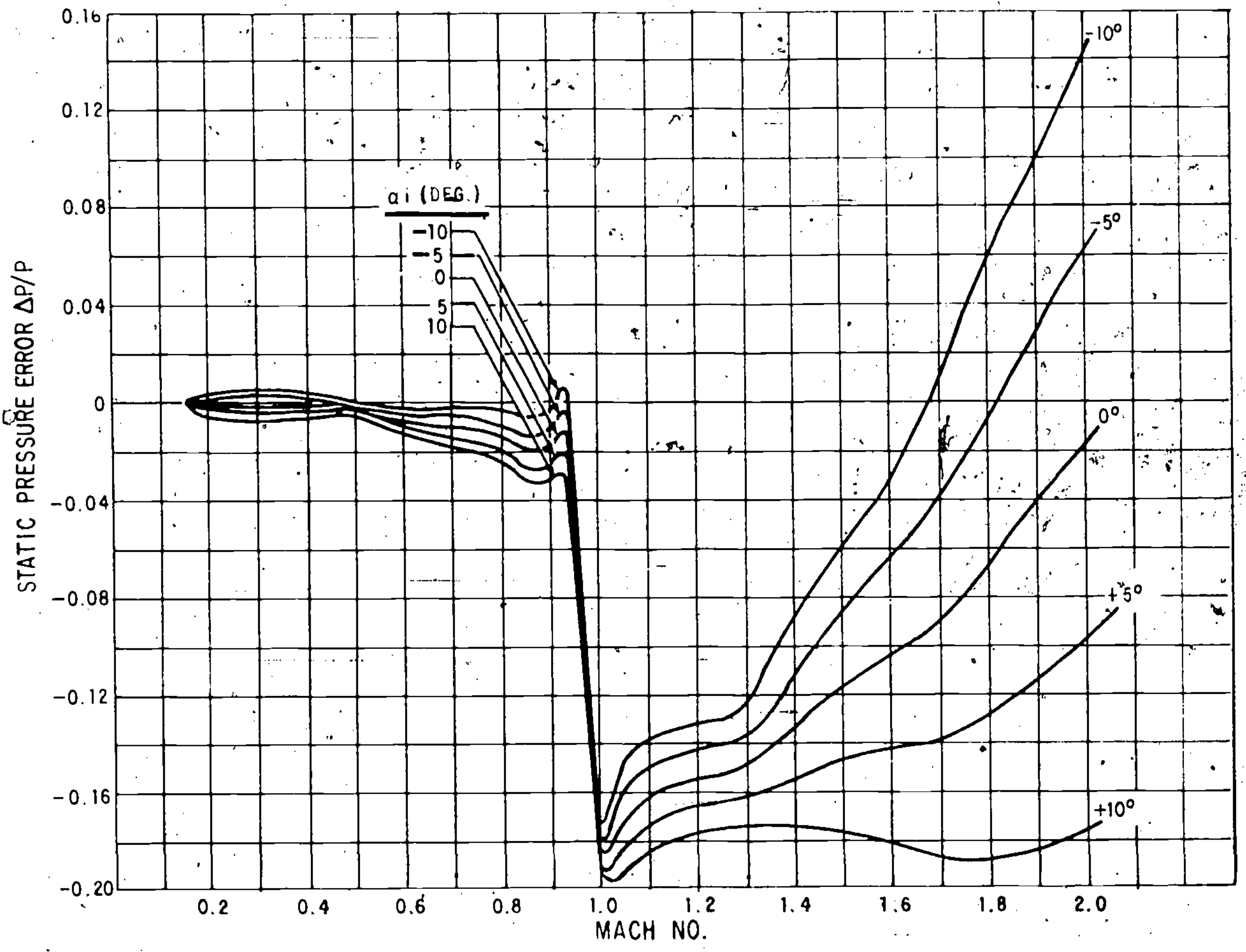

208.84

Figure 4-5.—Static pressure compensator curves.

or motions. Figure 4-4 is a data flow diagram which gives an overview of system operation. As can be seen from the diagram, uncorrected static pressure (Psi) is supplied directly from the static ports to the static pressure compensator (SPC) within the CADC. Psi is used as a reference and is compared with Mach number (Mn) and angle of attack (ai) to develop corrected static pressure (Ps). Ps is then supplied to the pressure ratio transducer (PRT) and the logarithm pressure controller (LPC) within the CADC, and to the cockpit flight instruments.

In the LPC, pneumatic input Ps is converted into two mechanical outputs and an electrical output. One mechanical output represents Ps and the other mechanical output represents the natural log of Ps (LnPs). The electrical output also represents LnPs.

In the PRT, pneumatic inputs of Ps and Pt (total pressure) are compared, producing a resultant mechanical output of Ps/Pt. Each of these functions is explained in detail in this chapter.

Static Pressure Compensator

As mentioned previously, both Mach number and angle of attack can cause significant errors in the static pressure system. Indicated static pressure (Psi), as detected by the aircraft static ports, deviates from true static pressure; these deviations have a definite relationship to

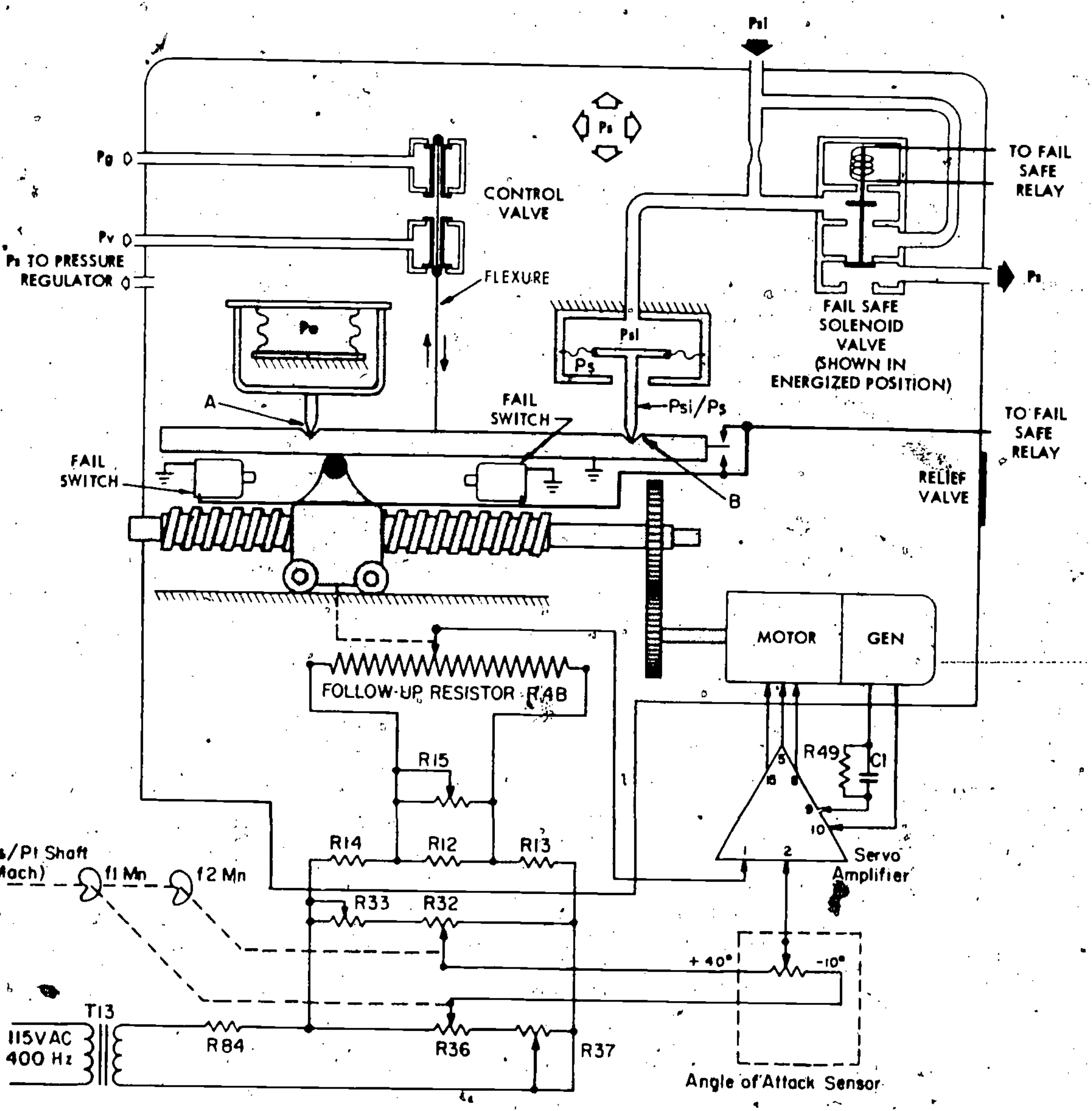

Figure 4-6.—Schematic diagram of static pressure compensator.

208.85

Mach number and angle of attack, which is shown by the graph in figure 4-5.

The graph (fig. 4-5) shows the amount of indicated static pressure error for five different angles of attack, which range in aircraft speeds from Mach 0.2 to Mach 2.0. Although the error curve for each angle of attack is definitely different from each of the others, a radical deviation occurs for all of them during transonic speeds of the aircraft. From approximately Mach 0.94 to Mach 1.06, the Ps error increases more rapidly than at any other speed. The static pressure compensator must correct these errors so that true static pressure is available to the remainder of the system and the aircraft. Figure 4-6 is a schematic diagram of the static pressure compensator.

Figure 4-6 shows how the SPC produces true static pressure by regulating the case pressure within the SPC so that it becomes true static pressure. This is done by comparing indicated static pressure with case pressure; compensating for aircraft speed and angle of attack, then changing the case pressure as required. If case pressure is too low, a pressure line is opened until true static pressure is reached. If case pressure is too high, a vacuum line is opened until the proper amount of pressure is released. Fail-safe circuitry provides for direct transfer of Psi to the Ps load lines in case of SPC failure. Should a malfunction cause pressure to build up inside the SPC case, a pressure-relief valve opens to prevent damage to the SPC.

The heart of the SPC is the force balance instrument, or balanced beam. It receives the command (or compensation) signals in the form of a change of fulcrum and actuates the control valves for pressure or vacuum as needed.

In more detail, Psi from the static pressure ports of the aircraft is applied to the SPC via the input line shown in the upper right portion of figure 4-6. The input line is connected to the fail-safe solenoid valve and to the Psi diaphragm. At the diaphragm, case pressure (Ps) opposes Psi, resulting in the difference force of Psi/Ps being applied to the beam at point B.

At point A, an evacuated bellows, whose expansion is determined by Ps, applies a downward force on the beam relative to Ps. When the force Psi/Ps, multiplied by the distance to the fulcrum, is equal to the force Ps, multiplied by its distance to the fulcrum, the beam is balanced. This signifies that case pressure is accurately regulated and is true static pressure.

Should the fulcrum position be changed, the beam will tip in response to the unbalance. For example, if the B end of the beam tips downward, it indicates more pressure is needed inside the SPC. The physical arrangement is such that, when the beam moves downward, the flexure attached to the beam also moves downward, opening the control valve to the Pg (higher pressure) line. This allows pressurized air to enter the case until the beam again becomes balanced, closing the Pg control valve. Had the B end of the beam moved upward, the cause would have been excessive pressure inside the case. Therefore, the flexure would have moved upward, opening the valve to the Pv (vacuum) line, letting out the excess pressure until the beam is rebalanced.

As was mentioned earlier, indicated static pressure will deviate from true static pressure while the aircraft is in flight. At transonic and supersonic speeds, the deviations will be greater and will vary with aircraft attitude. Because of this, SPC corrections must be made a function of both Mach number (Mn) and indicated angle of attack (αi). The circuitry shown in the lower half of figure 4-6 illustrates how this is accomplished.

For explanatory purposes, resistors R15, R33, and R37 can be disregarded. They are calibration resistors and their presence is of no concern at this time. The wipers of potentiometers R36 and R32 are positioned by two Mach function cams, f1 (Mn) and f2 (Mn). Their electrical outputs are coupled to opposite sides of the C potentiometer in the angle-of-attack transmitter. Thus, the voltage applied to the potentiometer equals f1/f2, or the voltage difference between the wipers of R36 and R32.

Since the f1 and f2 function cams are revolved by rotation of the Ps/Pt (Mach) shaft, positioning of the two potentiometer wipers is related to Mach number. Therefore, at zero Mach the two wiper voltages are equal, indicating no airspeed and no voltage drop across the angle-of-attack potentiometer. As airspeed is increased, a voltage differential between the wipers causes current flow through the angle-of-attack potentiometer. The angle-of-attack of the aircraft determines the position of the wiper on the potentiometer. It should be noted at this time that all three angle-of-attack potentiometer wipers are driven by rotation of the angle-of-attack probe, but only the C potentiometer is used here.

The indicated angle of attack deviates from true angle of attack while the aircraft is in flight for the same reasons that Psi deviates from Ps. Placement of the angle-of-attack probe on the aircraft and the effects of airstream buffeting [illegible] erroneous indications. Because these are known effects, it is possible to compensate for them. Function cams f1 and f2 are machined in such a way as to correct the two deviations (intercept and slope), and maintain the correct ratio of output voltage per degree of angle of attack across the αi potentiometer which supplies the Mach correction voltage for the SPC.

The correction (or command) signal is applied to the servoamplifier, and is amplified to drive the servomotor. The mechanical output from the motor operates a tachometer-generator (for servoamplifier feedback) and rotates the gears driving the jackscrew. As the jackscrew turns, the fulcrum carriage is moved toward the desired position. It can be seen in figure 4-6 that the carriage is mechanically linked to the slider on followup resistor R48. R48 serves as a feedback resistor whose output is fed to the servoamplifier to cancel the effects of the command signal when the fulcrum is at the correct position.

Case pressure is supplied to the Ps load lines through the normally energized fail-safe solenoid valve. If the SPC fails, the solenoid valve is deenergized and Psi is connected into the Ps load. Should this occur, a warning light in the cockpit indicates the failure. Included in the fail-safe circuitry is a time-delay relay and a holding relay. The static pressure compensator fail-safe circuitry can be seen in figure 4-7. After 0.3 second, the time-delay relay drops out if the beam becomes unbalanced or if the 115-volt ac supply to the fulcrum-positioning servo is interrupted. The holding relay (which controls the solenoid valve) deenergizes if the 28-volt dc power is interrupted or if the time-delay relay trips.

The manually operated RESET switch, located in the cockpit, permits control of the solenoid valve. If the malfunction causing the relay to trip has cleared, the solenoid valve can

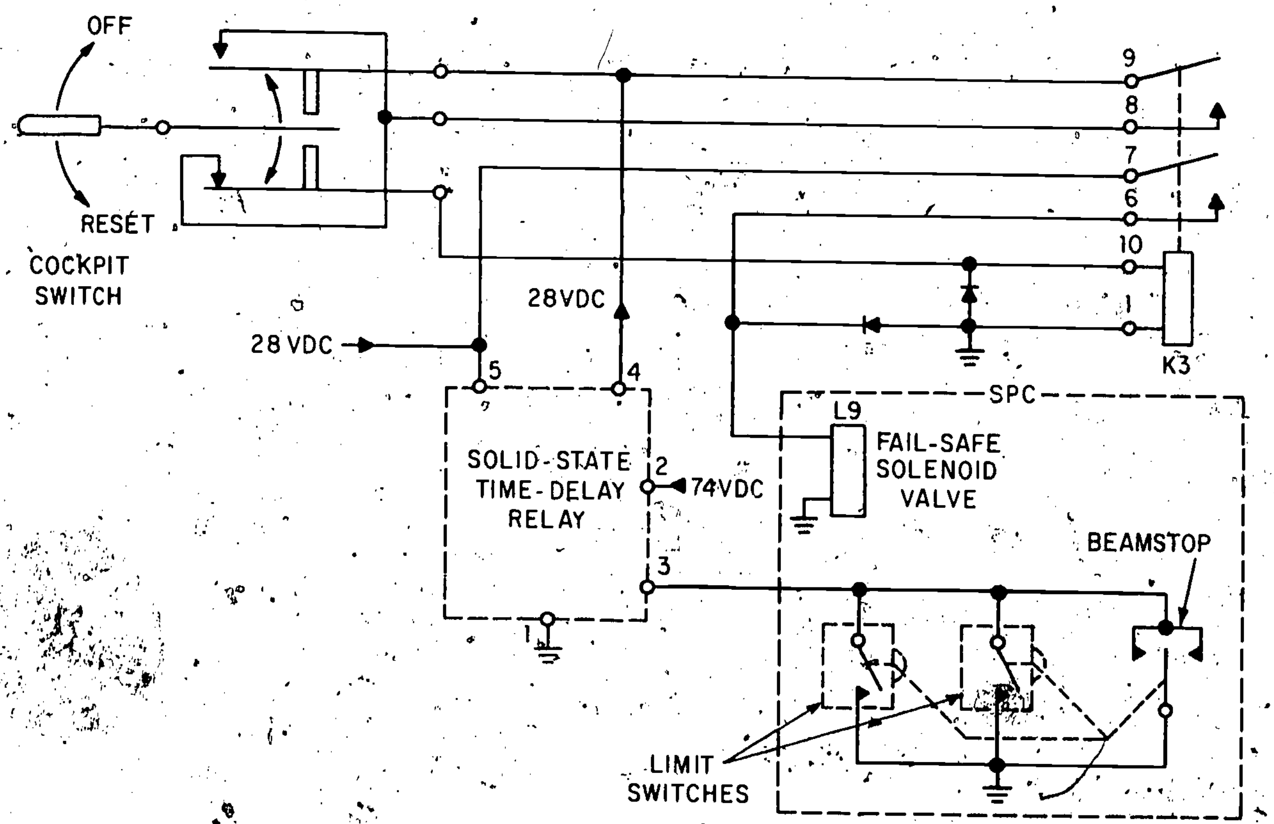

208.87

Figure 4-7.—Static pressure compensator fail-safe circuit.

be energized again by this reset switch. However, if the malfunction still exists, the reset switch will have no effect.

To supply air pressure that is higher than ambient for use by the SPC, engine bleed air (Pr) is coupled to the pressure regulator. There, Pr becomes Pg, and is compared with the SPC case pressure by means of a bellows-diaphragm arrangement and regulated to maintain a correct Pg to Ps ratio. It is then connected to the Pg control valve. A Pg output from the pressure regulator is also fed to the jet pump to develop vacuum pressure (Pv). Pv is developed by the venturi effect in the jet pump and is connected to the Pv valve in the SPC.

Pressure Ratio Transducer

The correct angular displacement of the Ps/Pt shaft is one of the basic operations of the computer, for it provides the Mach number and Mach hold output reference. The Mach output from the pressure ratio transducer is derived from the inputs of Ps (corrected static pressure) and Pt (total pressure), since the difference between the two pressures is directly attributed to aircraft speed.

As in the SPC, a force balanced instrument is used in the pressure ratio transducer to establish the mechanical reference point for compared pressures. However, the PRT utilizes the balanced beam in a manner slightly different from that used in the SPC. Since the PRT produces a mechanical instead of a pneumatic output, a beam imbalance is detected electrically, the signal is amplified, and a servomotor drives a gear train to produce both the Mach output and the beam correction. Figure 4-8 is the functional diagram of the PRT.

Pressure difference sensing occurs in the pressure ratio sensor (PRS), a plug-in unit mounted inside the PRT. Corrected static pressure and total pressure inputs are applied pneumatically to the PRS, with Ps entering the case and Pt applied to a differential pressure bellows. Corrected static pressure controls the expansion of an evacuated bellows, which exerts a force equal to static pressure on one end of the balanced beam. On the other end of the beam, the differential bellows applies a force equal to Pt-Ps. The point of beam-balance, therefore, represents the ratio of static pressure to total pressure, or Ps/Pt.

At the left side of the PRS (fig. 4-8) is an E-core transformer, which derives its name from the core shape. The center leg of the transformer, which is shorter than the two outside legs, holds the exciter winding, to which 400-Hz ac is applied. The pickup windings on the two outside legs are series-connected, but are wound in opposite directions. An iron armature on the end of the balanced beam is suspended between the two outer core legs, adjacent to the center leg. When the beam is balanced, the space between the movable iron core and each of the outer legs is equal. Because the two windings are wound in opposite directions and connected in series, voltage induced in the two windings are 180° out of phase and equal in amplitude. As a result, they cancel each other and produce no appreciable output signal.

If the beam is unbalanced by a change in either Ps or Pt (or both), the iron core will be moved closer to one of the two outer windings and farther away from the other. The permeance of the magnetic path from the center leg through the movable core and back through the outer leg is directly affected by distance. Therefore, as the core moves closer to one of the outer legs, the induced signal increases in the nearer winding and decreases in the winding farther from the movable core.

Because the induced voltages in the two windings on the outer legs are 180° out of phase, the resultant output voltage is equal to the difference between the two, with the amplitude representative of the amount of beam displacement. The phase of the output is that of the larger voltage and indicates the direction of beam displacement.

External to the PRS, but within the PRT, are the servoamplifier, servomotor, and gears required to correct beam displacement and furnish the output of Ps/Pt (Mach). Their operation is very similar to that of the servo loop within the SPC. An error signal is applied to the input of the servoamplifier, and is amplified to drive the servomotor. The direction of servomotor rotation is determined by the phase of the input error signal. While driving the gears in the proper direction to rebalance the beam and correct the Mach output, the motor

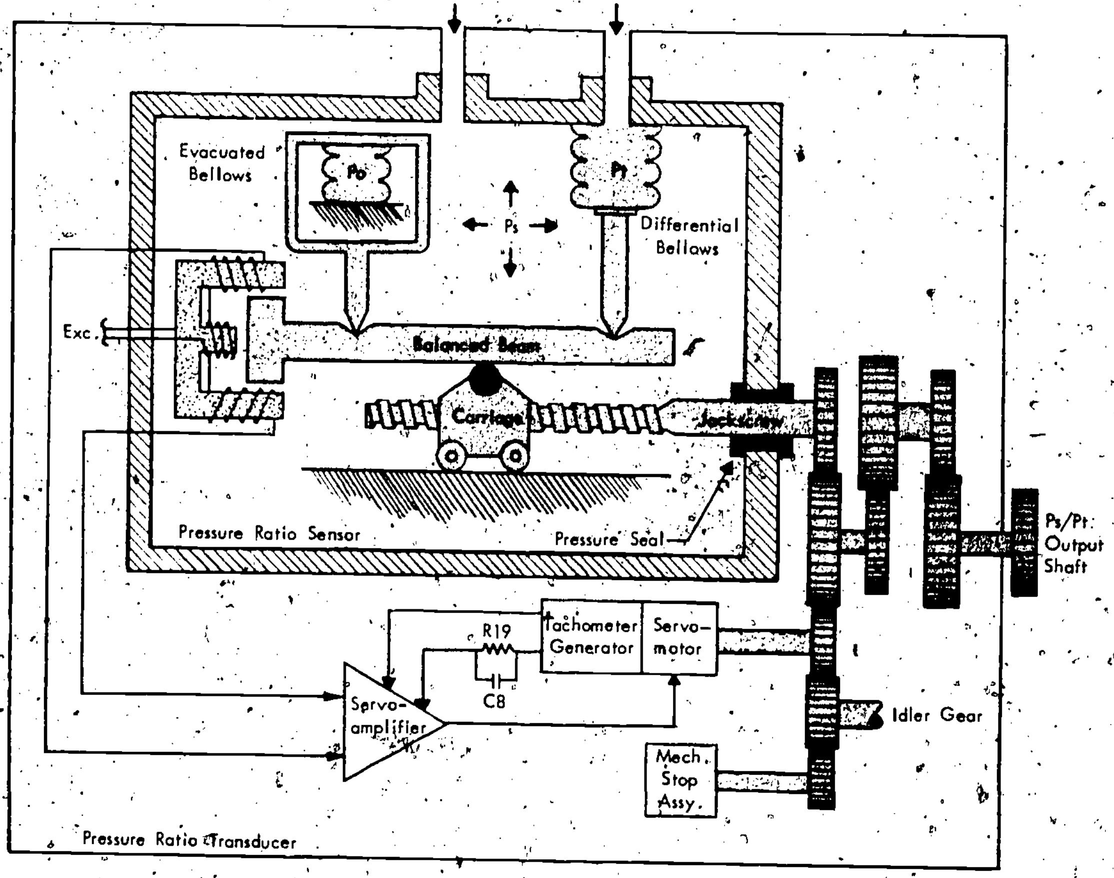

208.88

Figure 4-8.—Functional diagram of the pressure ratio transducer.

also drives a tachometer-generator whose output is applied to the servoamplifier as an inverse feedback to stabilize the servo operation.

When the carriage is driven to the proper point to rebalance the beam, the signals induced in the two outer windings of the E-core transformer, once again become equal and opposite, canceling each other. Since no error signal is applied to the servoamplifier, the motor stops and the Mach output (Ps/Pt) shaft is positioned at the correct angular displacement.

Logarithm Pressure Controller

To supply a usable altitude reference for the automatic flight and missile control systems, it is necessary to convert static pressure from its pneumatic form to a mechanical output representative of Ps. Because logarithmic quantities can be multiplied or divided by simple addition and subtraction, and the natural logarithm of static pressure varies in an almost linear manner with altitude in feet, a logarithm pressure controller (LPC) is used.

LPC OUTPUTS.—The outputs of the LPC are (1) a shaft rotation equivalent to the natural logarithm of static pressure (LnPs); (2) a shaft rotation equivalent to static pressure (Ps), (3) a synchro output (LnPs) to the altitude encoding unit, and (4) a synchro output equivalent to incremental changes in the natural logarithm of static pressure (ΔLnPs).

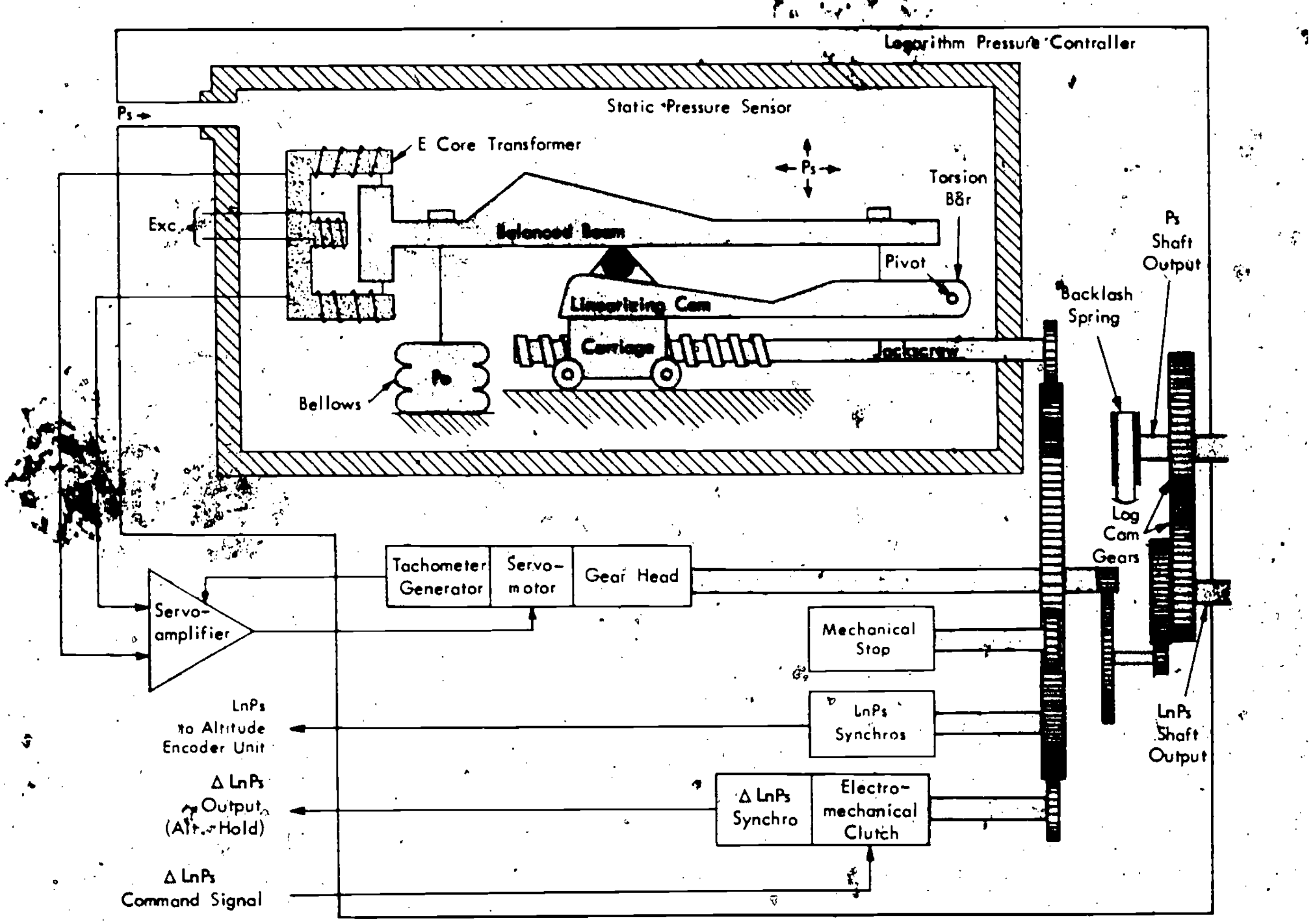

208.89

Figure 4-9.—Functional diagram of logarithm pressure controller.

LPC OPERATION.—Operation of the LPC (fig. 4-9) is quite similar to that of the PRT. In each unit a plug-in pressure sensor is used, and each sensor operates on the balanced beam principle. The major difference between the two units is that only one pneumatic input is applied to the LPC, requiring a different method of applying torque to one end of the balanced beam.

Corrected static pressure from the SPC is supplied to the static pressure sensor (SPS) inside the LPC. The expansion of an evacuated bellows, which exerts pressure on one end of the balanced beam, is affected by the amount of Ps. As illustrated in figure 4-9, pressure is exerted on the other end of the beam by a torsion bar. If the two applied torques are equal, the beam is balanced and there is no output.

Should an imbalance occur, the beam moves in response to the strongest applied torque. This causes the movable core (on the end of the balanced beam) to move closer to one of the two E-core transformer pickup coils, and farther away from the other. The resultant output signal is coupled to the external servoamplifier, amplified, and connected back to the servomotor which drives the gear train to rebalance the beam. As with the PRT, the LPC servomotor drives a tachometer-generator which supplies an inverse feedback to the servoamplifier for motor stabilization.

The SPS carriage assembly has a noticeably different structure from that of the PRS carriage. This structure difference consists of a torsion bar applying force at one end of the beam and a linearizing cam to vary the amount of torque applied by the torsion bar. It was mentioned earlier that the natural logarithm of static pressure, varies in an ALMOST LINEAR manner with altitude in feet. The linearizing cam compensates for the slight nonlinearity so that a true logarithmic output is obtained.

To obtain the Ps shaft output, a pair of cam gears, cut to produce the antilog of LnPs, translates rotation of the LnPs shaft into Ps rotation. A mechanical stop is included in the LPC to limit rotation of the LnPs shaft to a range of -1,000 feet below to +70,000 feet above mean sea level.

In addition to the two mechanical outputs, the LPC contains three synchros that provide electrical outputs. One synchro provides a signal representative of ΔLnPs. An electromechanical clutch keeps this synchro disconnected from the LnPs output shaft until ALT HOLD mode is selected in the automatic flight control system (AFCS). When this occurs, the command signal energizes the clutch, which mechanically connects the synchro rotor to the output shaft. The rotor then rotates with altitude changes and provides an electrical output that is an analog of LnPs. The phase of the output signal indicates the direction of altitude change. The synchro has an incremental range of plus or minus 200 feet of altitude at sea level.

The other two synchros are both connected to the altitude encoding unit (AEU). The AEU is a dual-purpose electronic unit providing the transponder/IFF with a digital input in 100 foot increments capable of from -1,000 feet below to +80,000 feet above mean sea level. It also provides an electrical synchro signal to the pilot's and RIO's servoed altimeters. There are three possible inputs to the pilot's and RIO's altimeters—first and primary being the servosystem made up of the synchro transmitters in the AEU and the synchro receivers in the separate altimeters. If the AEU or its associated circuitry fails, the altimeters will revert to the Ps pneumatic input. The fail-safe circuitry in the SPC will automatically revert the altimeter inputs to Psi if the SPC fails.

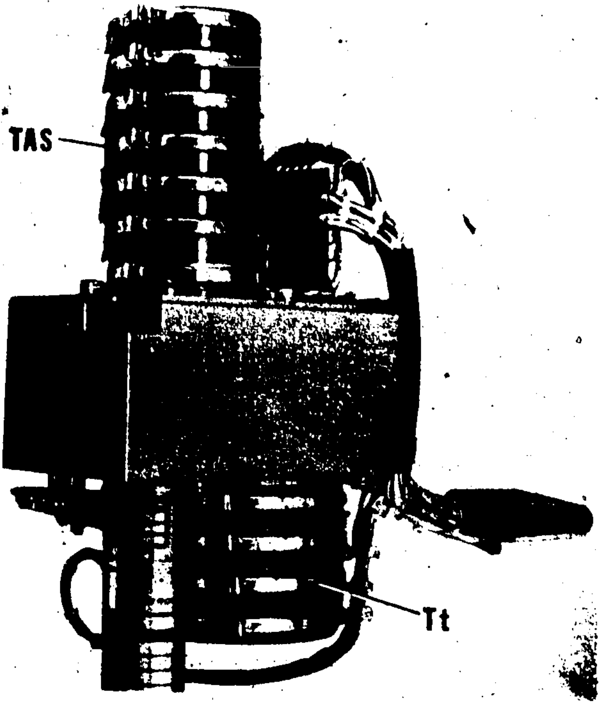

208.90

Figure 4-10.—TAS and Tt servo module.

Tt and TAS Servo Assembly Module

The total temperature and true airspeed servosystems are combined in a two-part module (fig. 4-10), which may be removed from the ADC as a single unit. One part of the module contains Tt components; the other contains TAS components.

Total temperature shaft mechanization is obtained as shown in figure 4-11. The Tt circuitry consists of a balanced bridge in which the magnitude of current is a function of total temperature, and a servosystem which converts the electrical signals to a mechanical output. The mechanical output is then converted into electrical signal inputs to the ramp control system. The ramps, which are variable intakes, control the velocity of the intake air being inducted into the engine when the aircraft is flying at supersonic speeds.

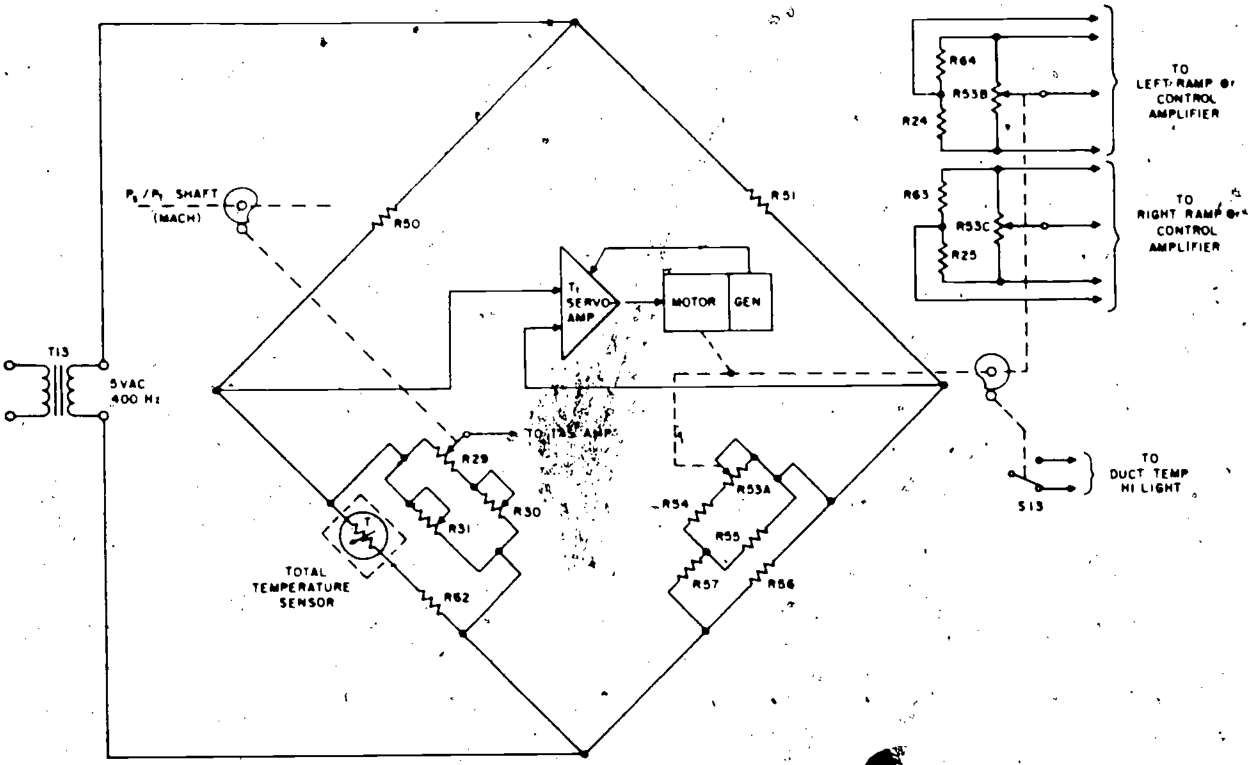

208.91

Figure 4-11.—Functional diagram of Tt shaft mechanization.

Excitation voltage is applied to the bridge circuit from transformer T13, which produces a current in each half of the bridge. When the bridge is balanced, the two servoamplifier inputs (one from each side of the bridge) will be of equal amplitude and there will be no error signal.

Error (or temperature change) signals are introduced into the bridge circuit by the total temperature sensor, which is contained in an aerodynamic probe mounted in the airstream. The temperature sensed by the total temperature sensor is the sum of the ambient temperature and the temperature produced by the deceleration of the air flowing into the probe. Since the speed of sound is dependent upon absolute temperature, and the sensor element resistance varies as a function of temperature, any temperature change results in a change of bridge balance and, therefore, a change of bridge current. The imbalance creates a difference voltage between the two servoamplifier inputs. The amplitude of the difference voltage is proportional to the amount of temperature variation, and the polarity indicates the direction of variation.

Since the computation of true airspeed requires total temperature information as well as Mach number, some of the circuit components used for Tt mechanization are also used in the TAS bridge. This may be seen in figure 4-12.

The theory of operation is similar to that for the Tt bridge circuit; however, the TAS bridge has two variable reference signals (Mn and Tt) instead of one. Bridge circuit excitation is supplied by transformer T13, which also supplies excitation for the Tt bridge.

As illustrated in figure 4-12, the TAS servoamplifier inputs are taken from the wipers of R29 and R60A. Positioning of the R29 wiper is determined by a Mach function cam, thereby making that servoamplifier input a function of both Mach number and total temperature. R60A is the followup potentiometer. Its output is electrically referenced to the angular position of the TAS output shaft.

The TAS output shaft is driven in the same manner as is the Tt output shaft, with the angular shaft position representative of true airspeed.

Additional potentiometers and switches whose outputs are controlled by the Tt and TAS shafts are labeled accordingly in both figure 4-11 and figure 4-12.

Mach Sector Assembly Module

The Mach sector assembly module contains a series of cam-operated potentiometers. The cams are mounted on the gear-driven Ps/Pt shaft as shown in the block diagram in figure 4-13. Table 4-2 lists the Mach potentiometer functions.

Computer Gearbox Module

The computer gearbox performs mechanical computations in response to shaft rotation inputs from the PRT and the LPC. The PRT input is a function of Mach (Ps/Pt shaft) and the LPC supplies Ps and LnPs references. The computer gearbox may be understood more easily if discussed operation by operation. Therefore, refer to both figure 4-13 and 4-14.

Ps POTENTIOMETER ASSEMBLY.—The two potentiometers in the Ps potentiometer assembly (fig. 4-13) provide the AMCS with electrical signals proportional to static pressure. The tap outputs supply a voltage equal to a known static pressure for AMCS bulit-in-test (BIT) functions.

LnPs POTENTIOMETER ASSEMBLY.—The LnPs potentiometer assembly provides electrical outputs proportional to the natural logarithm of

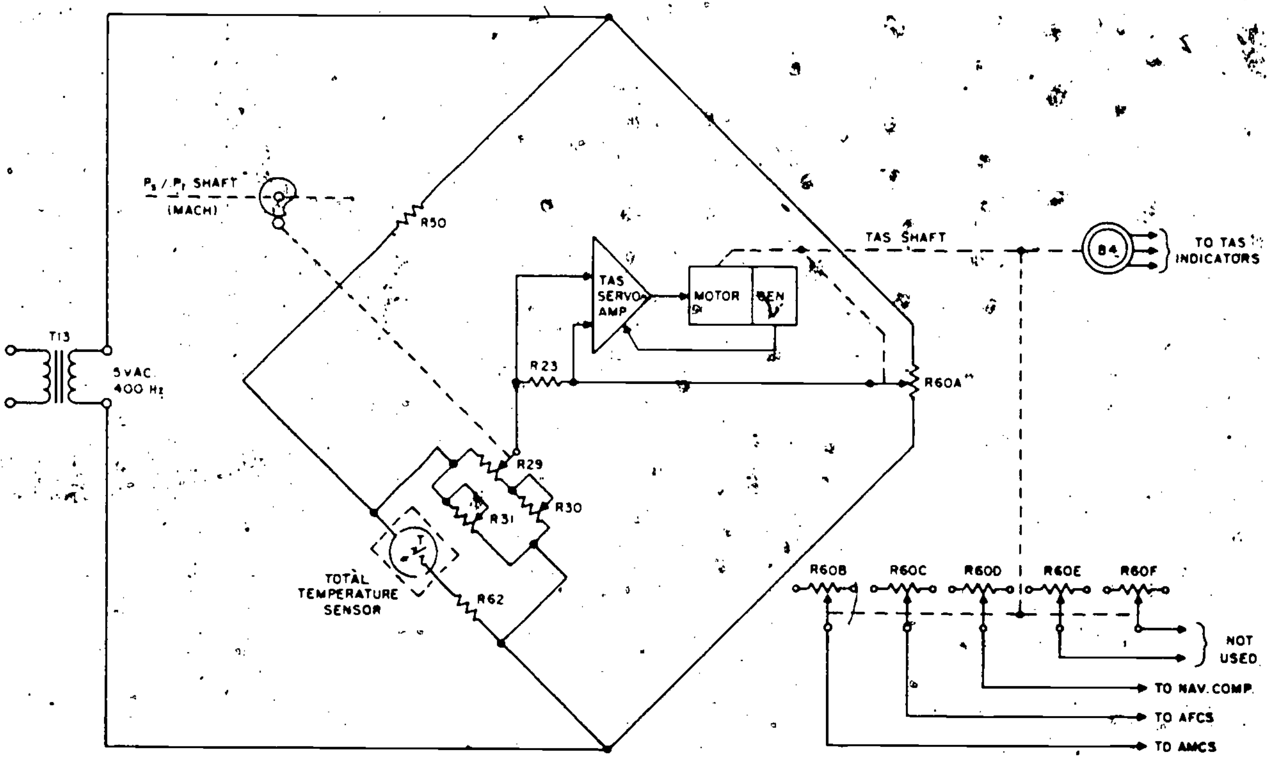

208.92

Figure 4-12.—Functional diagram of TAS shaft mechanization.

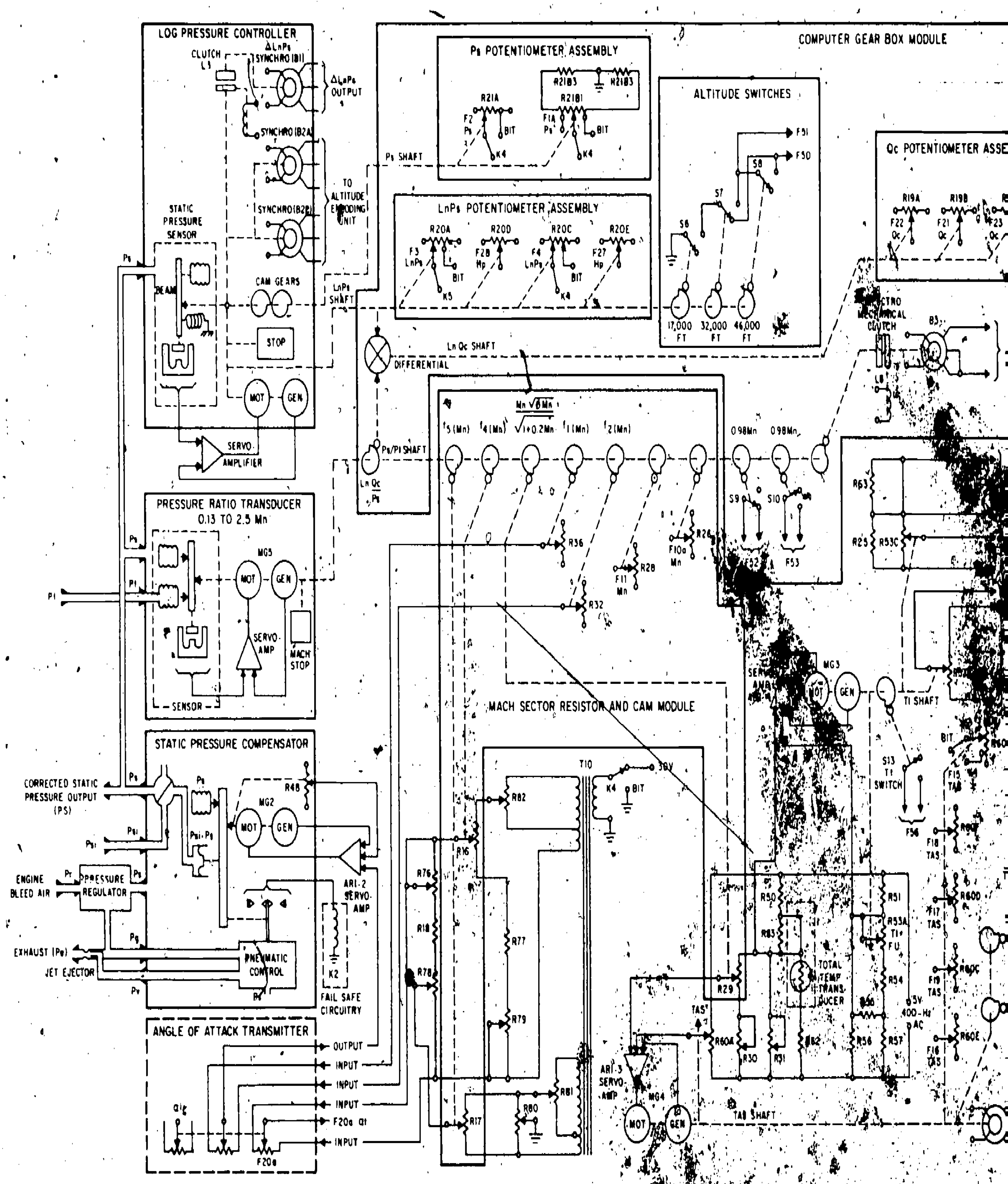

Figure 4-13.--CADC block diagram.

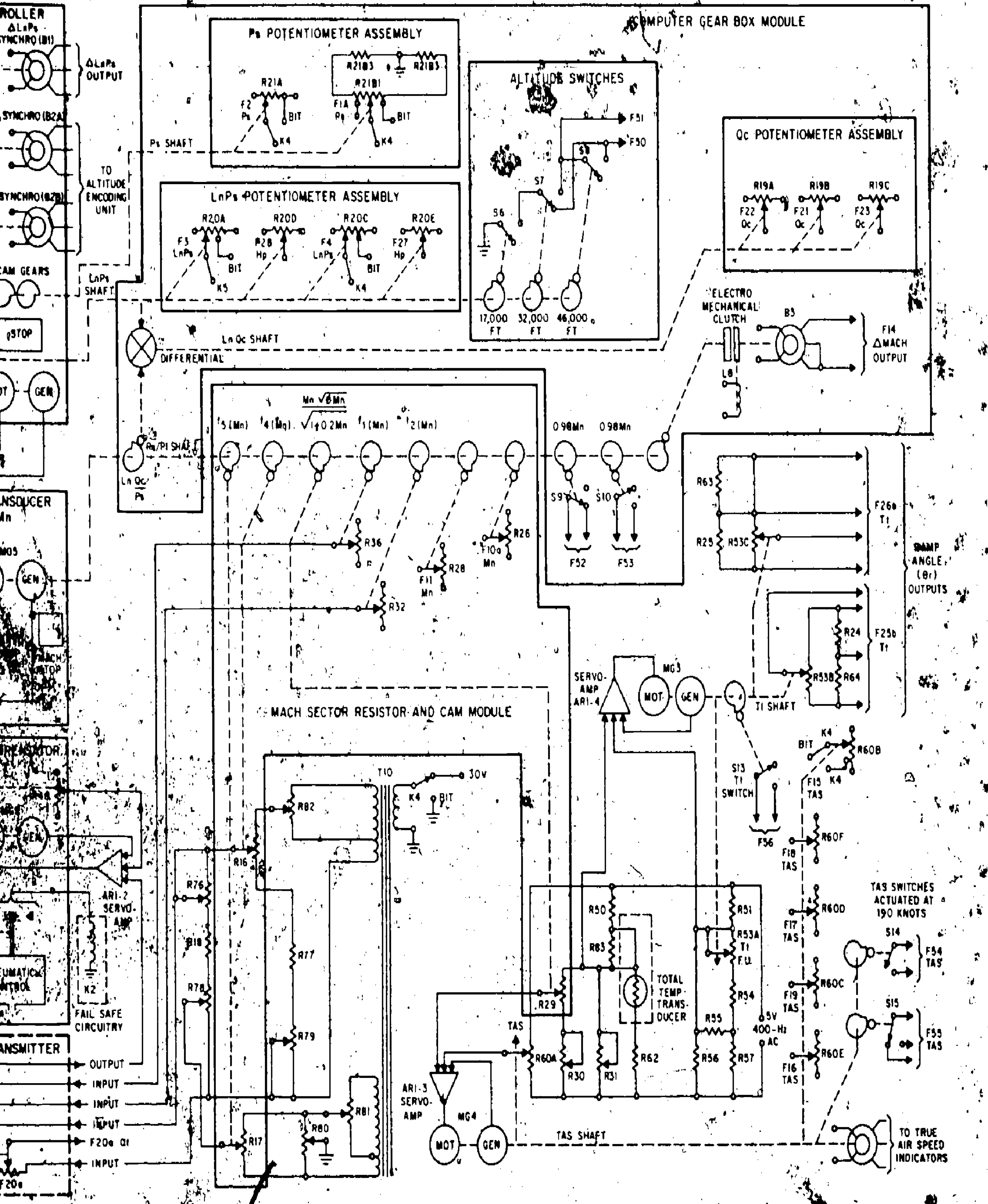

208.93

Figure 4-13.—CADC block diagram.

Table 4-2.—Mach potentiometer functions

Item No.	Function
R16 R17	Used to supply Mach number correction to the true angle-of-attack output circuit.
R26	Output 10a schedules the yaw rate signal to the flight control group for Mach number.
R28	Output 11 schedules the signal from output number 9 with Mach number, to furnish the flight control group with an altitude hold signal.
R29	Used to supply Mach information to the true airspeed servoamplifier.
R32 R36	Used to supply two functions of Mach number to be used in conjunction with the angle-of-attack transmitter potentiometer C to supply correction information to the SPC.

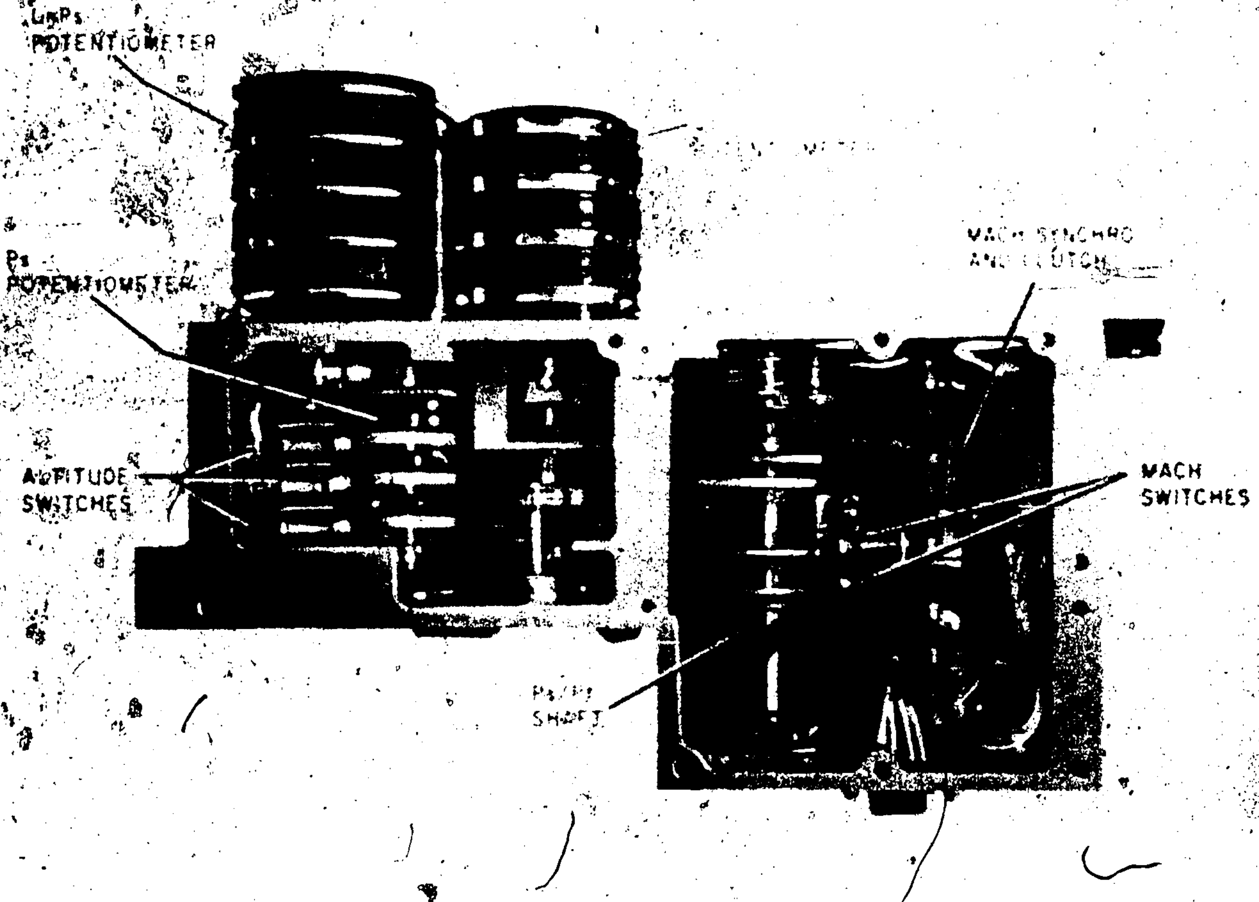

208.94

Figure 4-14.—CADC gearbox module.

static pressure. Outputs from both R20A and R20C go to the AMCS and each has taps to furnish BIT altitude voltage to the AMCS. R20D and R20E are not used at the present time.

ALTITUDE SWITCHES.—The altitude switches consist of three cam-operated switches that are also driven by the LnPs shaft. The cams are situated in the correct positions to actuate the switches at specific altitudes.

POTENTIOMETER ASSEMBLY.—The Qc potentiometers furnish electrical outputs representative of LnQc to the automatic flight control system. The wipers of the Qc potentiometers are driven by the LnQc shaft. LnQc shaft rotation is derived from two mechanical inputs—one from the LnPs shaft, and the other from the Ps/Pt shaft. The LnPs input from the LPC is coupled by a spur gear to one input of a mechanical differential. A cam on the Ps/Pt shaft generates Ln(Qc/Ps) which is inserted at the opposite side of the differential. The LnQc output shaft drives the three wipers of the potentiometer assembly, which are used by the AFCS.

MACH SWITCHES.—Mach switches S9 and S10 are actuated by their associated Mach function cams. The switches are set to open and close at specific Mach numbers.

MACH ERROR OUTPUT.—Mach error output information to the AFCS is transmitted by the rotor of synchro transmitter B3 which is connected to the Ps/Pt shaft through the electromechanical clutch (L8). When MACH HOLD is selected at the AFCS, the clutch

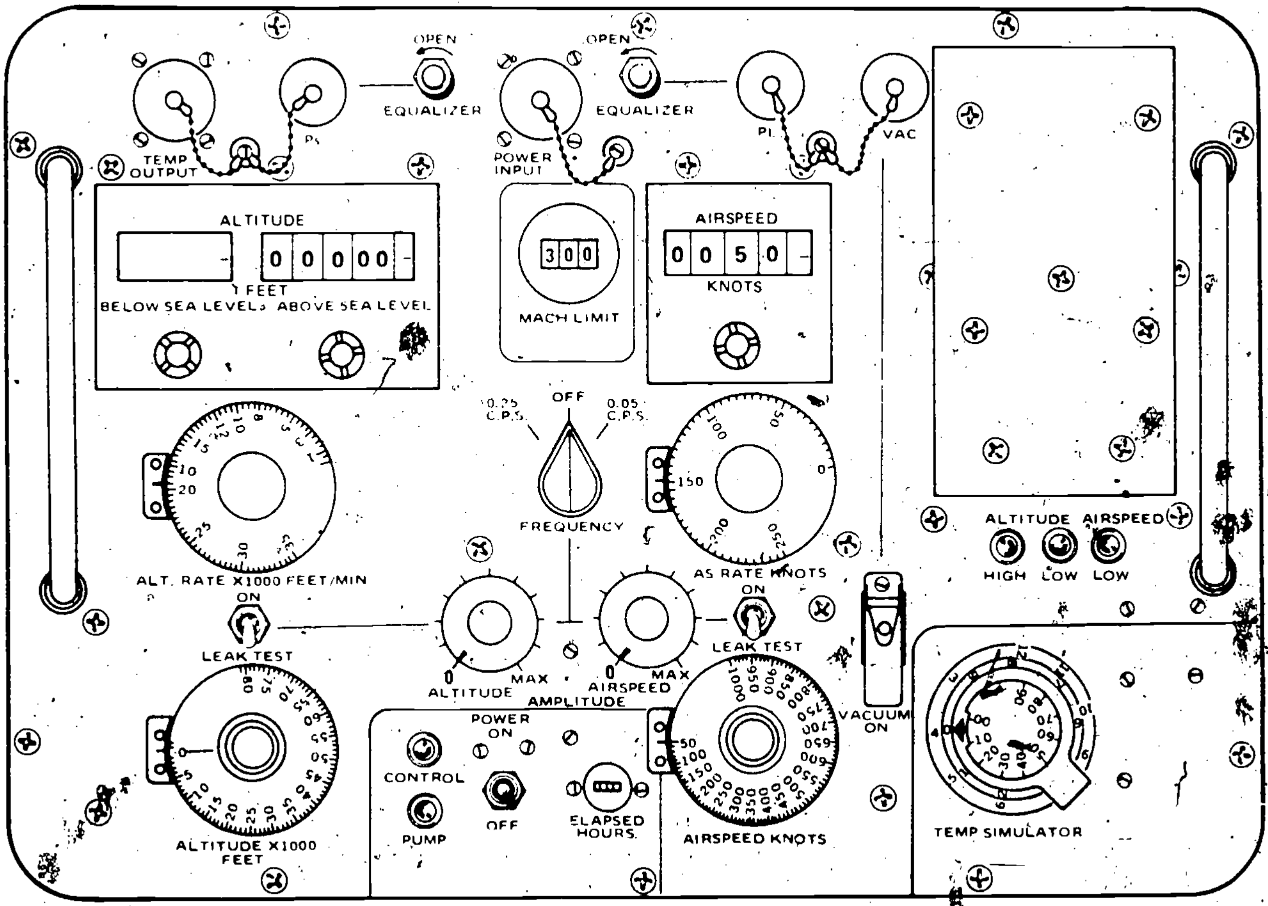

208.275

Figure 4-15.—Pneumatic test set TTU-205B/E.

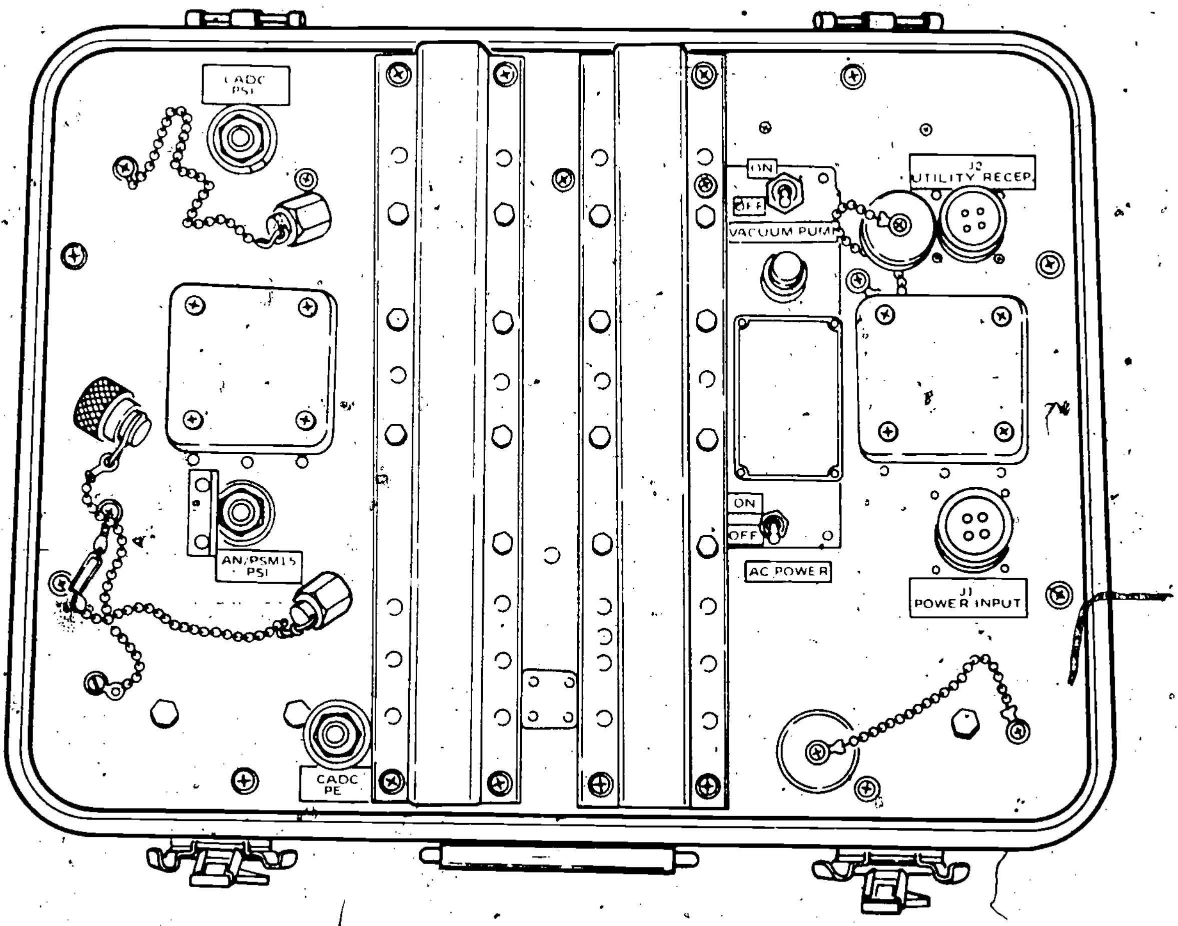

208.276

Figure 4-16.—Environmental pressure simulator SM-355/ASM-62.

engages and any movement of the Ps/Pt shaft rotates the synchro rotor. The electrical synchro output signal will indicate any Mach deviation from the engage reference.

ORGANIZATIONAL LEVEL PERFORMANCE TESTS

Maintaining the CADC system at the organizational maintenance level is limited to checking the operation of the system, isolating the fault, and correcting the fault by replacing faulty line replacement units or by repairing interconnecting lines and connections. Modular repair of the CADC is done by the intermediate level maintenance activity.

TEST EQUIPMENT

In order to make performance tests on the central air data computer set, a variety of portable line testers, simulators, and equipments are utilized. Primarily, the line testers consist of pneumatic testers for supplying pitot and static inputs, a high pressure dry air source as a substitution for engine bleed air, an electrical test set which simulates the various computer functions for checking computer potentiometer outputs, a true airspeed tester for checking the true airspeed portion of the computer set and indicators, etc. There are a number of different types of electrical and pneumatic line testers that are interchangeable on some aircraft models, while other aircraft models specify

91

particular line testers to be used. Therefore, it is necessary to check the appropriate Maintenance Instructions Manual in order to determine the proper testers to be used.

Since there are some duplications in line testers, only one tester of each general category is discussed.

Pneumatic Test Set

Pneumatic Test Set TTU-205 B/E (fig. 4-15) is the test set most commonly used in performing tests on the pneumatic portion of the central air data computer. It has replaced the VPT-10 pneumatic tester in most operating squadrons. It supplies pitot and static pressure inputs to the computer for simulating various altitudes and airspeeds. It is also used to perform leak tests in the computer and the aircraft pitot-static system.

Environmental Pressure Simulator

Environmental Pressure Simulator SM-355/ASM-62 (fig. 4-16) is used in conjunction with the Pneumatic Test Set, TTU-205 B/E, in providing the CADC with the required pneumatic inputs. It provides dry air exhaust pressure (Pe) at sufficient volume and

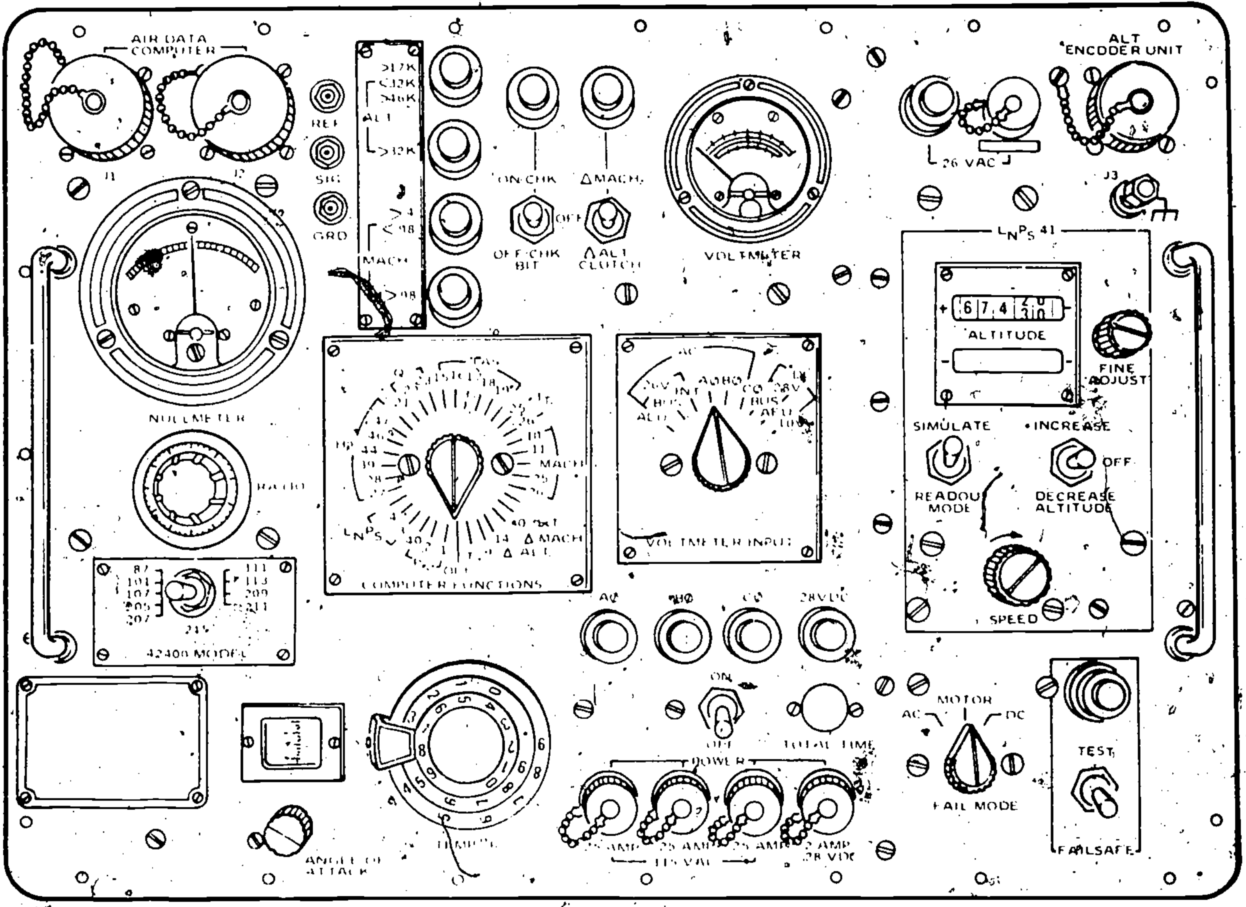

208.277

Figure 4-17.—Central air data computer test set TS-2357/ASM-269A.

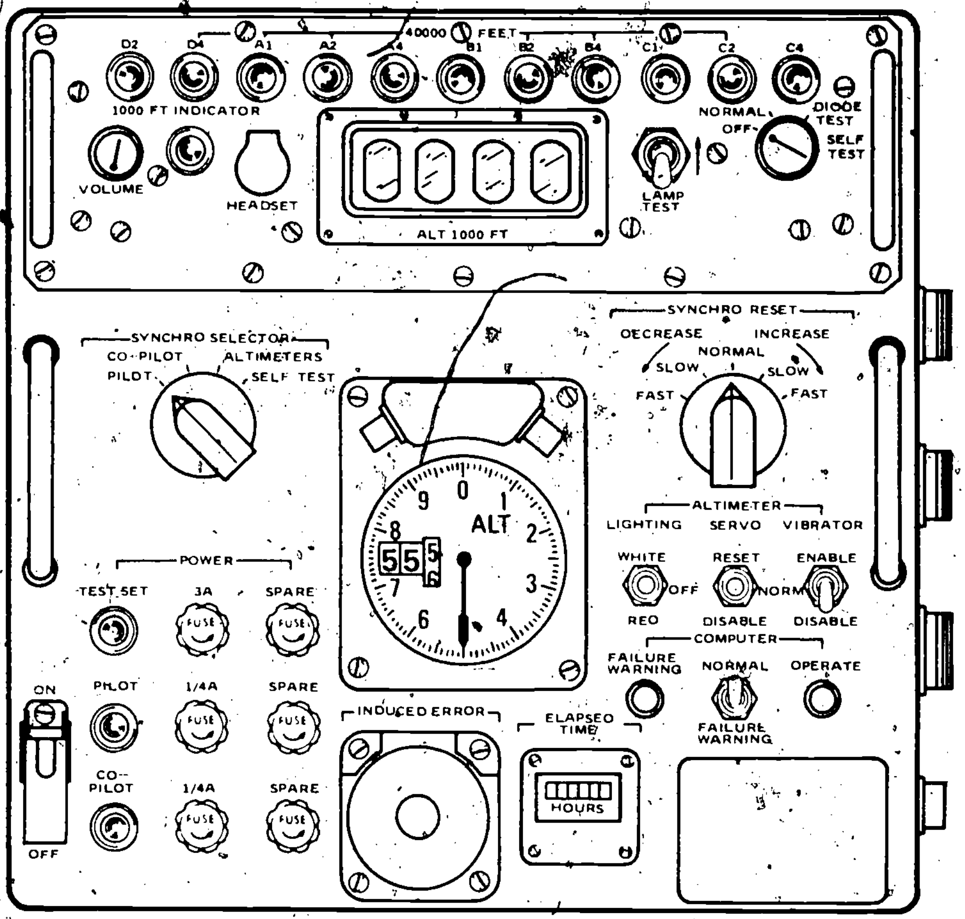

208.278

Figure 4-18.—Automatic altitude reporting encoders and altimeters test set, TTU-229/E.

pressure for the static pressure compensator (SPC). The Psi input/output is not normally used at this time.

Air Data Computer Test Set

Air Data Computer Test Set TS-2357/ASM-269A (fig. 4-17) is used in conjunction with the pneumatic tester for checking the computer potentiometer outputs. It tests the computer functions for various specified input data of angle of attack, absolute temperature, airspeed, and altitude. It contains a section for testing the altitude encoder output.

Automatic Altitude Reporting Encoders and Altimeters Test Set

Automatic Altitude Reporting Encoders and Altimeters Test Set TTU-229/E (fig. 4-18) is used in conjunction with Air Data Computer Test Set ASM-269A to test the output of the CADC system altitude encoder unit (AEU). The synchro output of the AEU, representing pressure altitude, is monitored on the test set and compared with the cockpit indicators. The maximum error allowed throughout the range of 0 to 70,000 feet is ±15 feet from the test set altitude. The digital output of the AEU is also

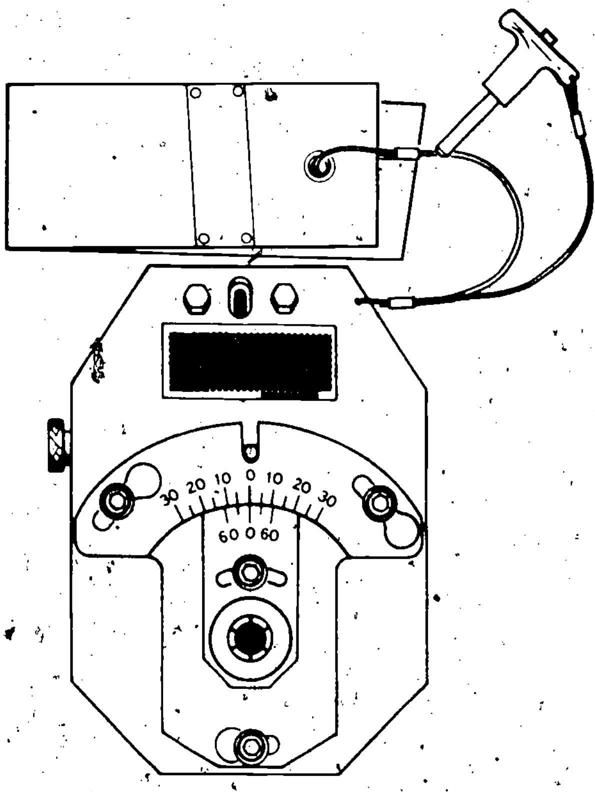

208.279
Figure 4-19.—Transducer simulator SM-410/ASM-195.

monitored to determine if the correct AEU information is being supplied to the IFF.

Transducer Simulator

The Transducer Simulator (fig. 4-19) is attached to the angle-of-attack transmitter on the aircraft when the CADC is to be tested. Through use of the Transducer Simulator, accurate angle-of-attack information may be supplied to the CADC by using the calibration marks on the face of the simulator.

TEST PROCEDURES

In performing functional tests on the CADC, refer to the appropriate maintenance data for the aircraft, model, and configuration on which the tests are to be performed. Follow the proper test sequence as given in the maintenance test data, and correct each fault before proceeding to the next test. In general, the proper order of functional tests is to begin with a pneumatic leak test, then work through all the potentiometer and switch checks, and finish with the static pressure compensator check.

Figure 4-20 shows a typical pneumatic test hookup on an F-4 aircraft, and figure 4-21 shows the hookup for Air Data Test Set TS-2357/ASM-269A.

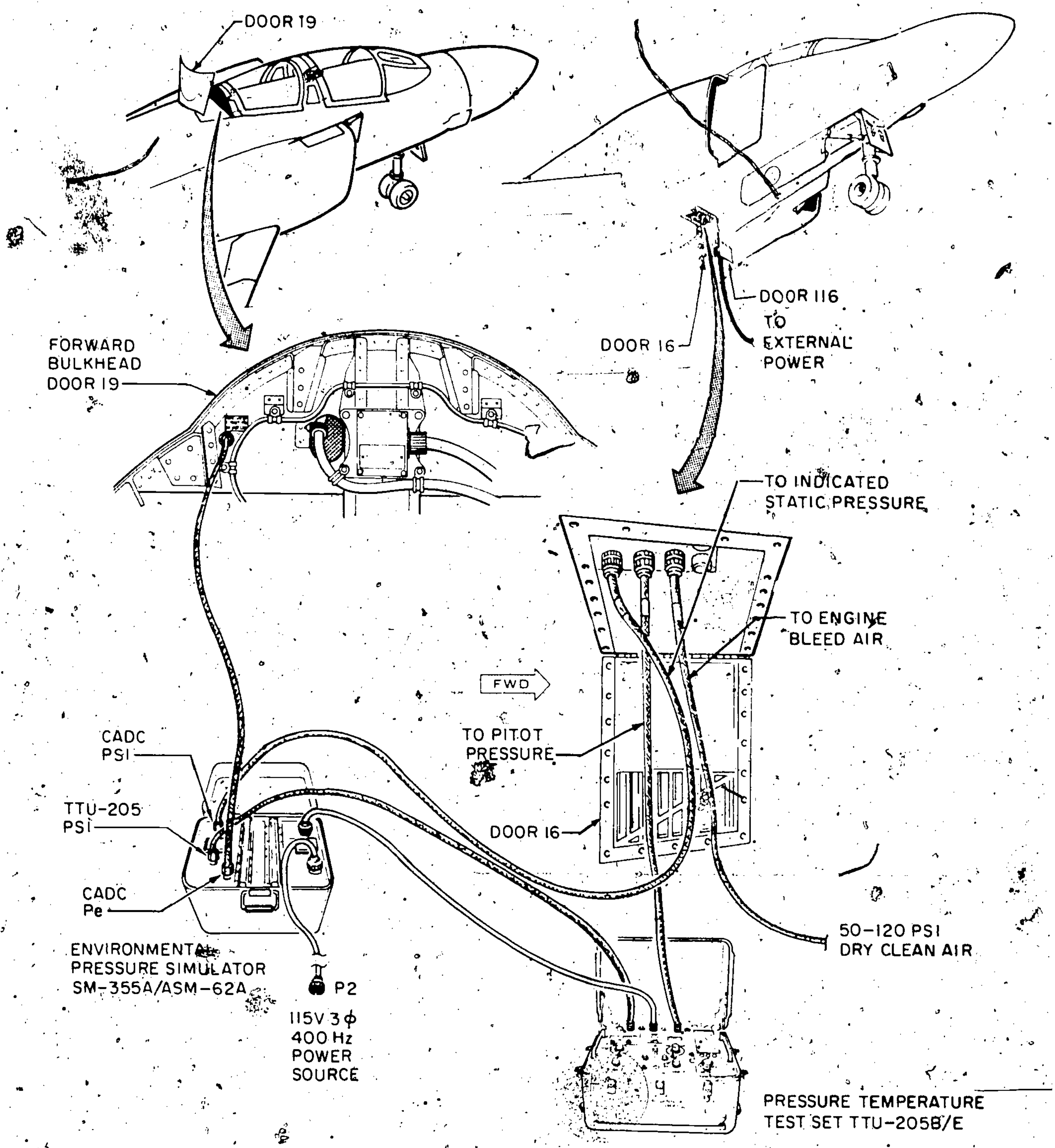

208.280

Figure 4-20.—Test equipment pneumatic hookup.

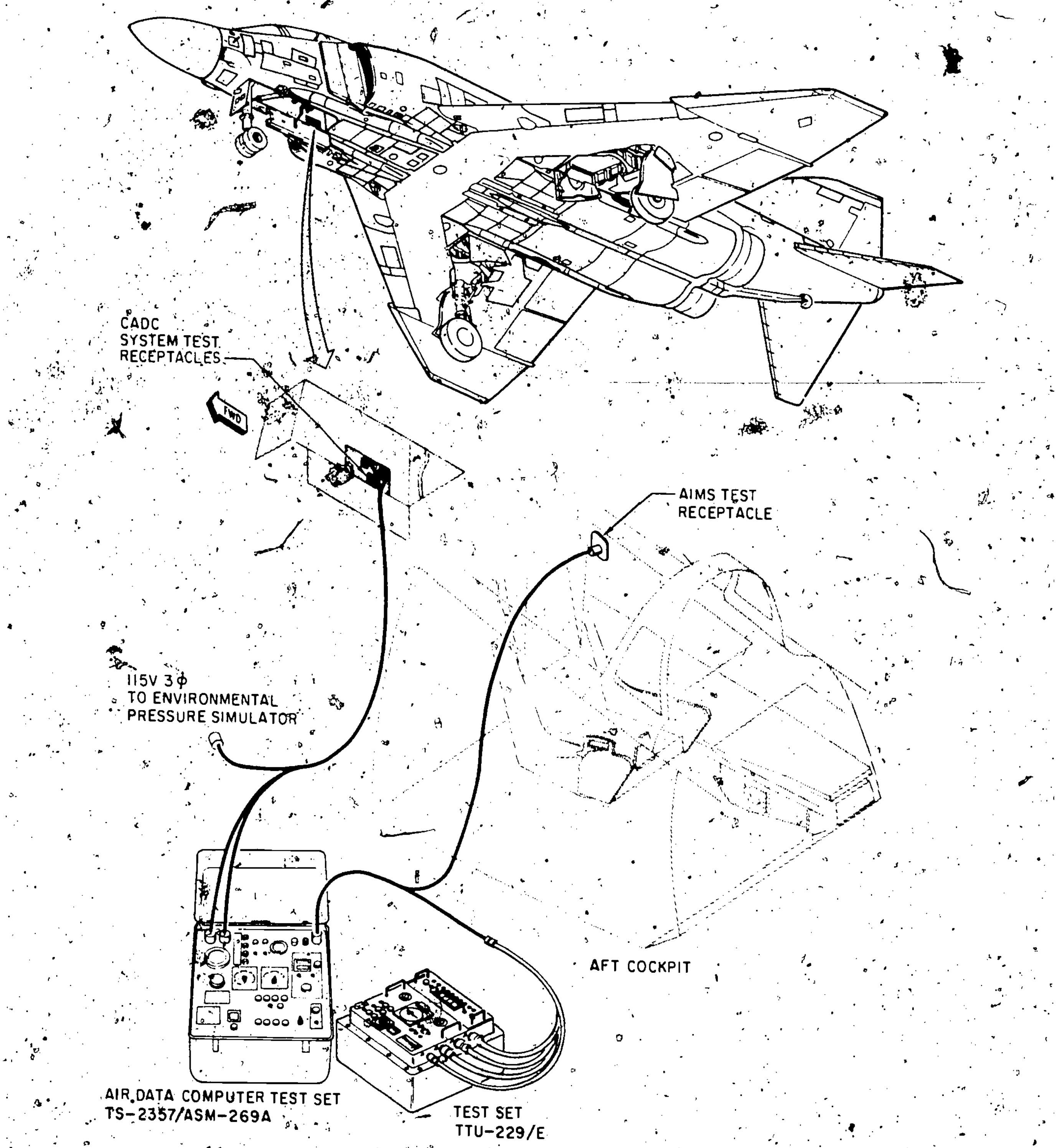

208.281

Figure 4-21.—Test equipment electrical hookup.

CHAPTER 5

ATTITUDE/HEADING REFERENCE BOMBING COMPUTER SYSTEMS

An attitude reference bombing computer system is essentially two systems combined into one: (1) an all-attitude indicating or display system, and (2) a low altitude bombing system. The all-attitude indicating portion of the system gives the pilot a visual display of heading, pitch, roll, and rate-of-turn. The low altitude bombing portion of the system enables the pilot to perform accurate low altitude bomb delivery maneuvers which consist of two primary methods of bomb delivery: (1) a low angle bomb release (loft bombing), and (2) a high angle bomb release (over-the-shoulder bombing).

The attitude reference bombing computer system discussed in this chapter is the AN/AJB-7, which is installed in the F4-J aircraft. The AN/AJB-7 is similar to its predecessors, the AN/AJB-3A and -3, which are installed in the F4-B and the A4, respectively. The all-attitude indicating system of the AN/AJB-7 is similar to many of the attitude flight reference systems found in the later types and models of Navy and Air Force aircraft. Essentially, the difference between the AN/AJB-7, -3A, and -3 systems and other similar attitude flight reference systems is that the AJB systems have the additional capability of performing low altitude bomb delivery.

ATTITUDE REFERENCE BOMBING COMPUTER SET AN/AJB-7

Attitude Reference Bombing Computer Set AN/AJB-7 is an all-attitude reference system with a special purpose bomb director. The all-attitude reference system provides the pilot with an accurate display of aircraft attitude through 360° in pitch, roll, and azimuth. The special purpose bomb director provides the commands for executing the bombing maneuver and for automatic bomb release.

The computer set, in addition to its primary functions, provides attitude information to other aircraft associated systems such as the autopilot and the missile control system.

ALL-ATTITUDE DISPLAY SYSTEM

The AN/AJB-7 uses a three-axis servo-controlled readout sphere to present a continuous all-attitude display to the pilot. The attitude indicator, which houses the sphere, is mounted on the instrument panel, directly in front of the pilot. Any given attitude of the aircraft is presented to the pilot via the sphere, which is capable of rotating 360° about the roll, pitch, and azimuth axes. Any complex attitude assumed by the aircraft is thus graphically presented to the pilot. One reference point for this all-attitude determination is obtained from the displacement gyroscope assembly. The gyroscope mount is properly oriented and precisely aligned to the longitudinal and lateral axes of the aircraft. Figure 5-1 is an illustration of the attitude indicator.

Azimuth Display

Azimuth or heading information is displayed by vertical marks in 5° increments horizontally about the center of the attitude indicator sphere. The azimuth information may be supplied by one of three references selected by the mode switch on the compass controller: (1) unstabilized magnetic heading from the flux valve, (2) stabilized magnetic heading, or (3) by using the directional gyro only as a heading reference.

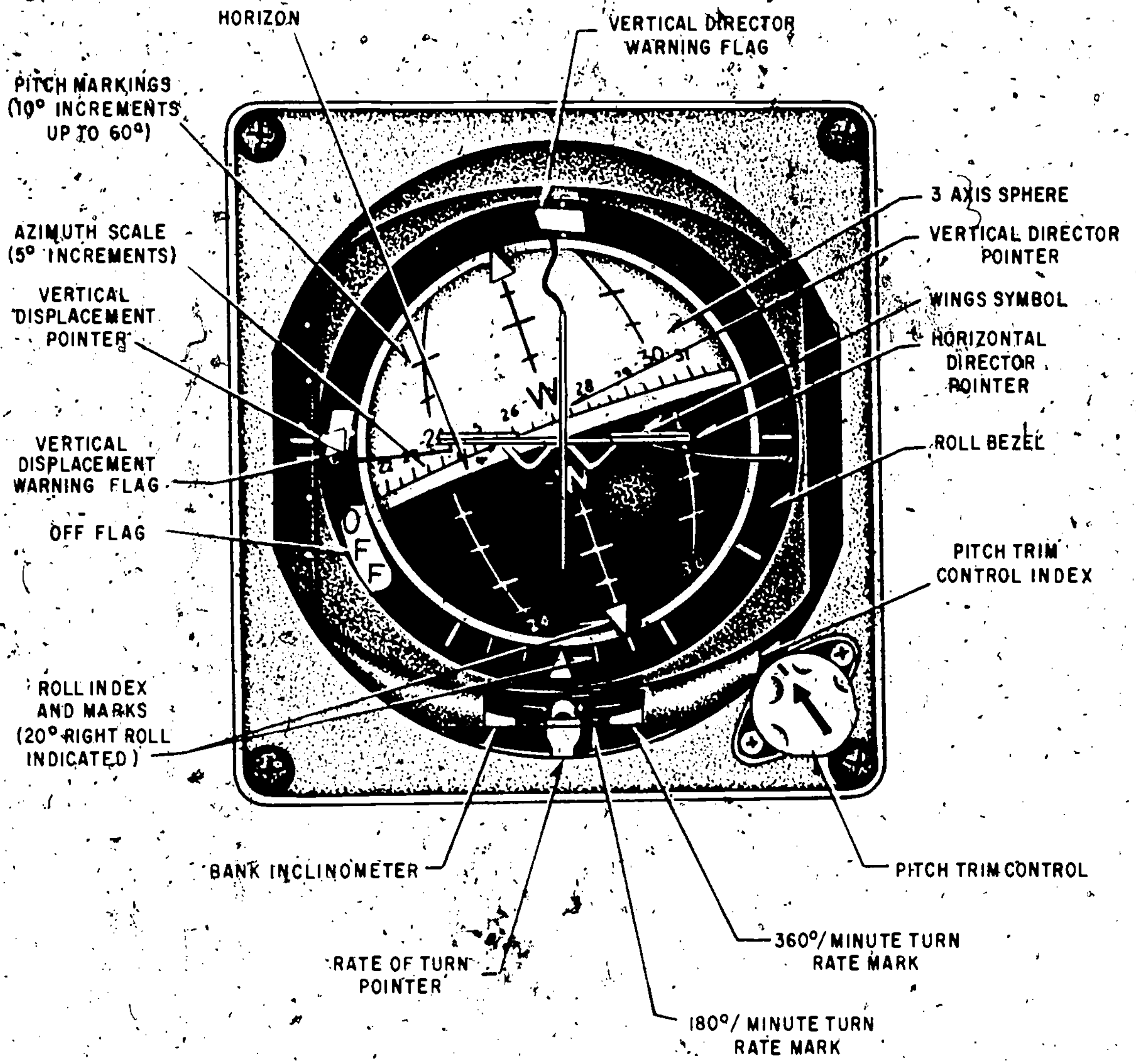

208.118

Figure 5-1.—Attitude indicator flags and pointers.

Attitude Display

Aircraft attitude is displayed on the sphere of the attitude indicator through 360° of pitch and roll. Also, aircraft rate-of-turn is displayed by a rate-of-turn pointer located on the attitude indicator just below the attitude sphere.

PITCH AND ROLL.—Pitch and roll reference information is supplied by the vertical gyro, located in the displacement gyro assembly, when STBY is selected on the primary-standby switch on the compass controller. When the compass controller primary-standby switch is in the PRIM position, pitch and roll reference information is supplied by the geocentric Vertical Flight Reference Set, AN/ASN-70, which is discussed in the latter part of this chapter.

NOTE: The F-4J model aircraft also contains a pilot's standby attitude indicator and a rear cockpit remote attitude indicator. Both of these indicators receive pitch and roll attitude reference information from the AN/AJB-7 displacement gyro assembly regardless of the position selected by the compass controller PRIM-STBY switch.

RATE-OF-TURN.—The rate-of-turn pointer on the attitude indicator receives rate-of-turn reference information from the rate gyro transmitter. The rate gyro transmitter senses the direction and rate of aircraft turns about the aircraft yaw axis and transmits this rate-of-turn information to the indicator in the form of a dc voltage proportional to the rate of aircraft turn.

LOW ALTITUDE BOMBING FUNCTIONS

There are four bombing functions or modes available for a bombing run: (1) loft, (2) timed over-the-shoulder, (3) instantaneous over-the-shoulder, and (4) direct. The mode is selected by positioning the bomb control switch on the aircraft main instrument panel. Once initiated, any bombing run (except direct) may be canceled by releasing the bomb button, yawing the aircraft more than 30°, or placing the bomb control switch to the OFF position.

Loft

A loft bombing run is a low altitude, low angle release bombing run. A typical loft bombing run is illustrated in figure 5-2. The identification point (IP), PULLUP time interval (TI), and LOW ANGLE release setting are set in before the run is initiated. The pilot depresses the pickle button over the identification point which centers the horizontal and vertical flight director pointers on the attitude indicator. One second before the end of the preset PULLUP time interval, a short warning tone burst is produced in the headsets. At the end of the timed interval, the LABS lamp lights and a continuous tone is produced in the headsets. The pilot immediately begins pullup and flies the aircraft so that the horizontal and vertical pointers remain centered. The horizontal and vertical pointers determine the accuracy of the bomb drop; the closer to the center position both are kept, the more accurate the drop will be.

To maintain the horizontal director pointer on center requires that the pilot linearly increase the pitch attitude until the aircraft pulls 4 g's after 2 seconds. The vertical director pointer is sensitive to bank and yaw deviations and will be displaced from center an amount proportional

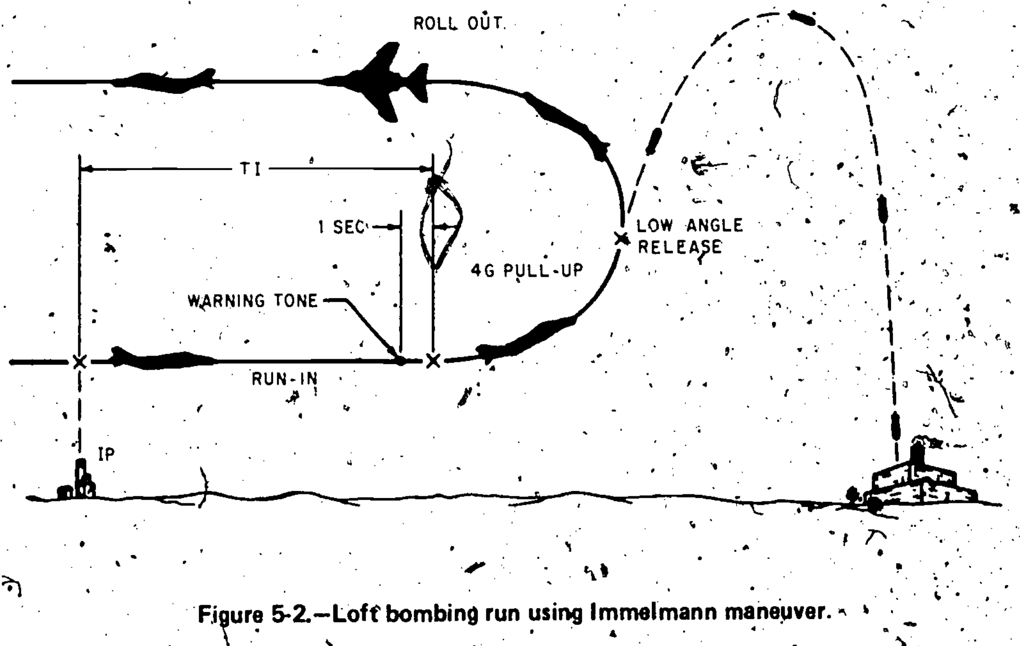

208.119

Figure 5-2.—Loft bombing run using Immelmann maneuver.

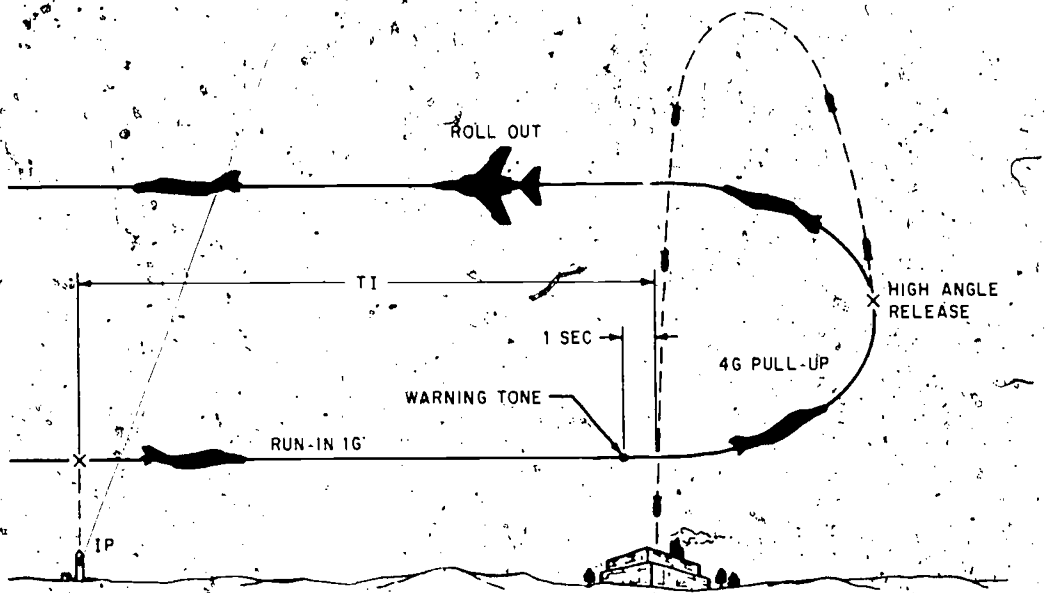

208.120

Figure 5-3.–Timed over-the-shoulder bombing run.

to the deviation. The bomb is automatically released at the preset release angle. Upon release of the bomb the LABS lamp goes out, the steady tone ceases, and the vertical director pointer is deflected out of view. The pilot continues to hold the bomb button depressed and continues the Immelmann maneuver, keeping the horizontal flight director pointer centered until inverted flight is reached. Upon reaching inverted flight, the pilot releases the pickle button and rolls the aircraft out, completing the maneuver.

Timed Over-the-Shoulder

The timed over-the-shoulder bombing run is a low-altitude, high angle release bombing run. A typical timed over-the-shoulder bomb run is illustrated in figure 5-3. It is essentially the same as a loft run except that bomb release is set in with the flight director bombing computer HIGH ANGLE control and the release occurs at an aircraft pitch angle greater than 90°. The bomb crosses the aircraft path after the aircraft has made its escape.

Instantaneous Over-the-Shoulder

The instantaneous over-the-shoulder method of bomb delivery does not require an identification point or a timed interval. The bomb button is depressed directly over the target and pullup is begun immediately. Bomb release, as in timed over-the-shoulder, is obtained at an angle greater than 90°, and the bomb follows a similar trajectory.

Direct

The direct method of bomb delivery is initiated by the pilot by selecting DIRECT on the bomb control panel. The bomb is released at the instant the pilot depresses the pickle (bomb) button.

DESCRIPTION OF COMPONENTS

Aircraft Accelerometer

The aricraft accelerometer provides an output voltage that is proportional to a linearly applied acceleration along its sensitive axis. This axis is normal (perpendicular) to the longitudinal axis of the aircraft. The aircraft accelerometer supplies g information to the flight director bombing computer; it is functionally part of the BOMBING GROUP.

Amplifier-Power Supply

The amplifier-power supply provides the necessary servoamplifiers and power requirements for proper operation of the gyroscope. The amplifer-power supply contains time-delay relays that control the application of spin and erection potentials to the gyroscope. This unit is functionally a part of the ATTITUDE REFERENCE GROUP.

Bomb Release Angle Computer

The bomb release angle computer provides bomb release and relay switching at preselected pitch angles. In addition, this unit resolves displacement gyroscope assembly output signals into aircraft roll and yaw signals. The servo loop contained in the bomb release angle computer amplifies and follows the pitch information obtained from the displacement gyroscope assembly. The resulting gear-train rotation positions the rotors of a control transformer, a control transmitter, and a resolver. The gear-train actuates a ±20° switch and a low angle and a high angle release switch.

High and low angle insertion control knobs, with their associated digital readout counters, make up the front-panel controls of the bomb release angle computer. This unit is functionally considered part of the BOMBING GROUP.

Attitude Indicator

The attitude indicator contains an all-attitude indicating sphere and flags and pointers whose specialized indicating functions are shown in figure 5-1. An amplifier-power supply assembly, attached to the rear of the attitude indicator, is a "piggyback" unit which contains a power supply and the pitch, roll, and azimuth servoamplifiers.

The sphere is assembled from two halves—the upper portion, which is white in color, represents the sky; and the bottom half is black. A climb attitude is indicated by rolling the top of the sphere toward the viewer or downward, which causes the white-black demarcation line (artificial horizon) to move downward. The display in figure 5-1 shows the aircraft in a slightly nose low, 20° right wing down attitude on a 270° heading. The attitude indicator is functionally a part of the DISPLAY GROUP.

Compass Adapter-Compensator

The compass adapter-compensator processes heading information from both the compass transmitter and the displacement gyroscope assembly. The compass adapter-compensator azimuth modes are compass, directional gyro, and slaved. Open printed circuit boards, interconnected by flexible printed wiring, are used for the servoamplifiers, demodulators, power supply, and synchro. assemblies. The compass adapter-compensator also contains 24 compensating potentiometers for flux valve deviation compensation and a BIAS DEGREE/HOUR adjustment for compensating the average precession rate of the directional gyro. The compass adapter-compensator is functionally a part of the HEADING REFERENCE GROUP.

Compass System Controller

The compass system controller is used primarily to control the azimuth system. The various positions of the mode switch on the controller activate relays in the compass adapter-compensator, thus selecting the operating azimuth mode—compass, directional gyro, or slaved. Selection of primary (PRIM) and standby (STBY) attitude information is also provided by the compass system controller.

A spring-loaded, self-centering, push-to-turn type of set heading (SET HDG) control is provided to manually initiate a movement in the azimuth gear train. The PRIM-STBY switch selects either the AN/ASN-70 or the displacement gyro as a source of attitude information. The PRIM position provides AN/ASN-70 roll and pitch attitude information to the attitude indicator and to the radar system. A latitude (LAT) compensation control and an associated N-S hemisphere switch are provided on the front of the compass controller. This unit is a part of the HEADING REFERENCE GROUP.

Compass Transmitter

The compass transmitter, which is a flux valve or direction-sensing device, accurately detects its alignment relative to the horizontal component of the earth's magnetic field.

The pendulous sensing mass of the flux valve has a minimum of 27° of freedom or swing in all directions. The flux valve limitations or disadvantages include inaccuracies that result from excessive turns or abrupt attitude changes. Inaccuracies also result from distorted magnetic force fields found above 70° latitude or near large iron deposits. The flux valve, which is most useful when employed in conjunction with the displacement gyroscope assembly (slaved mode); also serves as an emergency source of heading information in the compass mode. The compass transmitter is a part of the HEADING REFERENCE GROUP.

Displacement Gyroscope Assembly

The displacement gyroscope assembly consists of two gyros–the vertical gyro and the directional gyro. The gyros are mounted in multiple gimbals supported by a common outer roll gimbal. This arrangement prevents "gimbal-locking" the vertical gyro. The displacement gyro is a functional part of the ATTITUDE REFERENCE GROUP.

Flight Director Bombing Computer

The flight director bombing computer provides a dc signal, proportional to roll and yaw, for steering information during a bombing run; a dc signal proportional to the g error; a 1200-Hz warning and pullup tone; and a heading synchronizing signal for yaw input to the bomb release angle computer. The flight director bombing computer is a part of the BOMBING GROUP.

Interval Timer

The interval timer is a timing device which is manually adjustable from 0 to 30 seconds, in increments of 0.1 second. The required time setting for the bombing run is determined by the predicted flying time from the identification point to the pullup point. The timer clutch is engaged when the store release button is pushed, which commences timer rundown. This unit is a part of the BOMBING GROUP.

Rate Gyroscope Transmitter

The rate gyroscope transmitter provides a dc signal that is proportional to the rate of displacement about the vertical axis of the aircraft. This output signal is applied to the rate-of-turn pointer on the attitude indicator. The rate gyroscope transmitter–which should not be confused with the switching rate gyroscope–detects and provides an immediate output when the aircraft yaws; it is an indicating device, whereas the switching rate gyroscope is as the name implies, a switching device. The rate gyroscope transmitter is considered a part of the DISPLAY GROUP.

Remote Attitude Indicator

The remote attitude indicator presents a visual display of aircraft pitch and roll. It contains a roll control transformer, a roll servoamplifier with its associated trim potentiometer (on the rear of the unit), and a motor-generator combination for driving the sphere about the roll axis. It also contains a pitch control transformer, a pitch servoamplifier and associated trim potentiometer (on the front of the unit), and a motor-generator combination for driving the sphere about its pitch axis. An OFF or failed condition is indicated by a flag.

The remote attitude indicator does not have 360° of freedom in pitch; however, by utilizing an illusion at a pitch angle approximating 90°, pitch angles greater than 90° can be visualized. After rotating approximately 90° in pitch, the sphere is rotated 180° in roll. At this point the pitch phase and the rotation of the pitch drive are reversed. The result, as far as the viewer is concerned, is as if the sphere moved passed 90° in pitch and continued toward 180°.

The remote attitude indicator is functionally a part of the ATTITUDE REFERENCE GROUP.

Standby Attitude Indicator

The standby attitude indicator presents a visual display of aircraft roll and pitch attitude through 360°. This 2-inch attitude indicator, located at the lower left side of the main attitude indicator, receives the same attitude reference information as the remote attitude indicator located in the rear cockpit. The standby and remote indicators receive ONLY AN/AJB-7 displacement gyroscope roll and pitch attitude information. The standby attitude indicator is functionally a part of the DISPLAY GROUP.

Switching Rate Gyroscope

The switching rate gyroscope interrupts gyro erection and slaving circuits when the aircraft rate-of-turn is equal to or greater than 15° per minute. This switching action (1) reduces vertical gyro (located in the displacement gyro) errors caused by turn-acceleration forces acting upon the gravity-sensitive erection switches, and (2) minimizes azimuth slaving errors which occur when the pendulously suspended magnetic detector (flux valve) swings too far from vertical. The switching rate gyroscope is considered a part of the ATTITUDE REFERENCE GROUP.

MODES OF OPERATION

In the following discussion on the modes of operation of the AN/AJB-7, refer to figures 5-4 and 5-5 which show the forward and aft cockpit controls and indicators in the F-4J aircraft.

Note that the horizontal situation indicator (HSI) and the bearing distance heading indicator (BDHI) are shown in figures 5-4 and 5-5, respectively. They are not part of the AN/AJB-7; they are part of the TACAN. However, their heading information is supplied by the AN/AJB-7; therefore, as far as the AE is concerned, they serve as compass repeaters.

Pitch and Roll Attitude Mode

There are two sources of pitch and roll attitude reference information supplied to the attitude indicator (forward cockpit): (1) the vertical flight reference set when primary mode is selected, and (2) the displacement gyroscope assembly when standby mode is selected. The PRIM-STBY mode switch is a two-position rotary switch located on the compass system controller.

The standby and remote attitude indicators receive their attitude reference information from the displacement gyro regardless of the position of the PRIM-STBY mode switch.

It should be noted that whenever there is a primary-standby mode transfer, the attitude indicator may or may not undergo a 180° change in pitch, roll, and azimuth. This is normal operation. In either case the sphere continues to display the correct attitude.

Some models of the F-4 aircraft employ a GYRO ERECT switch (fig. 5-4), which is a two-position switch—one position for normal erection voltages to the displacement gyroscope and the other position for fast erect voltages. In normal erection the displacement gyroscope gimbals are returned to level at a rate of 1° to 2° per minute; with the gyro erect switch in FAST, the displacement gyroscope gimbals are returned to level at a rate of 15° per minute. The purpose of FAST ERECT is to quickly erect the displacement gyroscope gimbals to the level position should they become unlevel during severe aircraft maneuvers. The FAST ERECT position is a momentary on switch position, and it should not be held in that position longer than 60 seconds. Failure to heed this caution may damage the displacement gyroscope leveling torquers.

Azimuth Modes

The azimuth system may operate in any of three modes—compass, directional gyro, or slaved. The mode is selected with the mode switch on the compass system controller. The mode switch also has a spring-loaded SYNC position to provide manual fast synchronization in the slaved mode. The following paragraphs

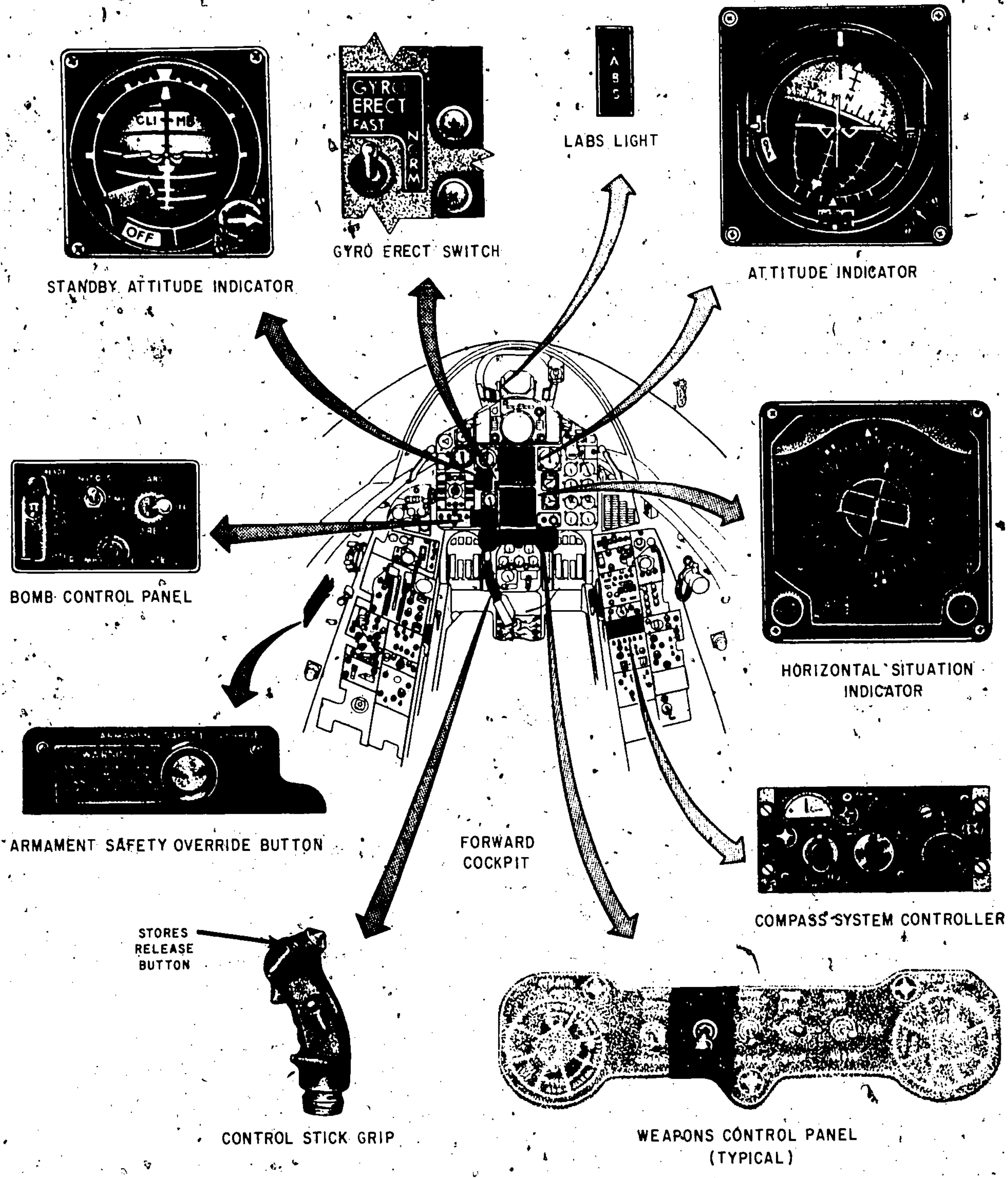

208.121

Figure 5-4.–Controls and indicators, forward cockpit.

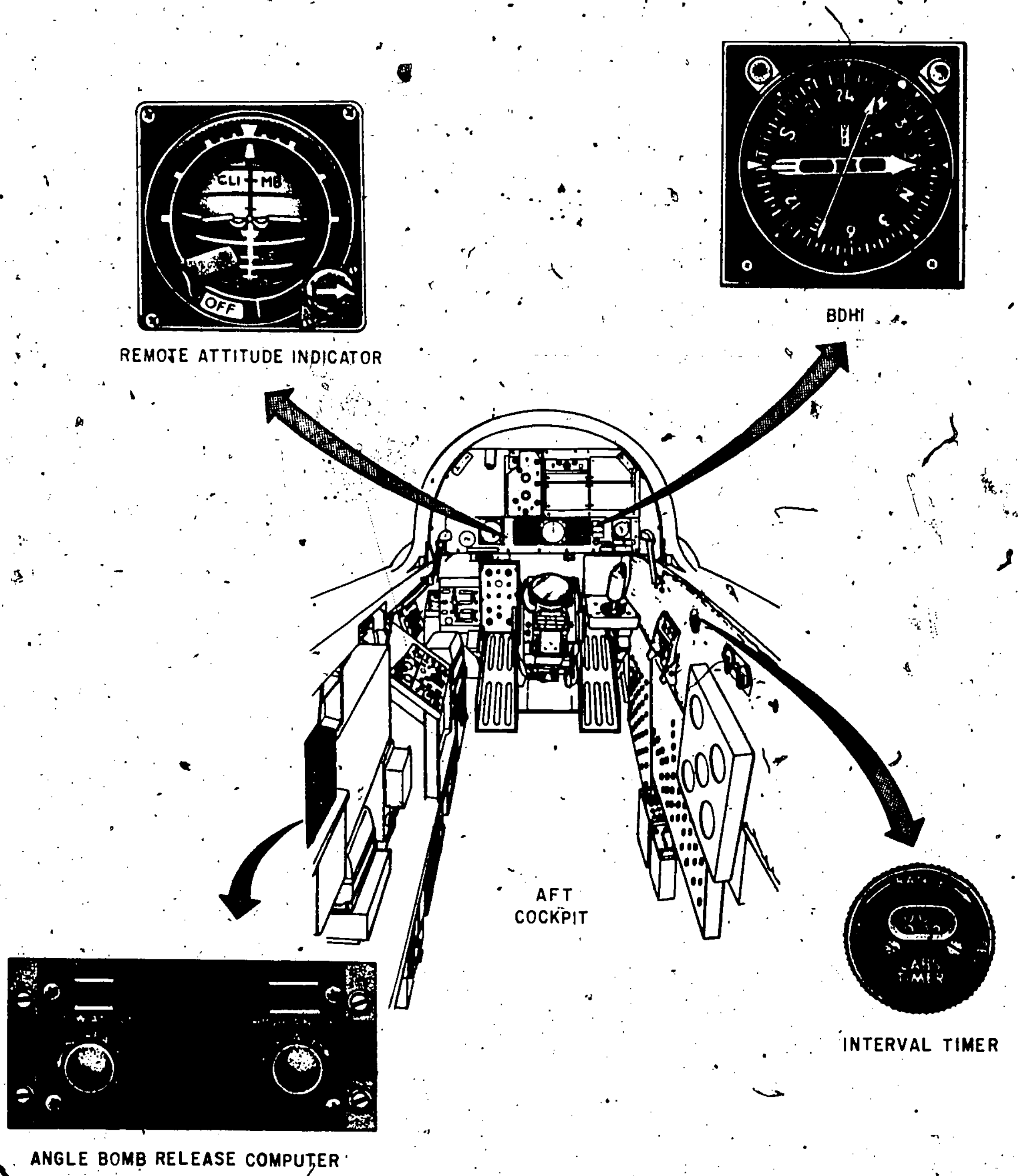

208.122

Figure 5-5.—Controls and indicators, aft cockpit.

provide a brief description of the three azimuth modes and their operating instructions.

COMPASS MODE.–The compass mode utilizes magnetic heading information from the compass transmitter (flux valve) only. This mode is an emergency mode and is used when the directional gyro (in the displacement gyroscope assembly) malfunctions. When compass mode is selected, the interlock with the AFCS opens automatically and prevents application of erratic magnetic heading signals to the flight control group.

Compass mode is selected as follows: (1) Turn the mode switch on the compass system controller to the COMP position, and (2) place the PRIM-STBY switch to the PRIM position. Note that if PRIM is not selected, the attitude indicator will continue to display displacement gyroscope information.

DIRECTIONAL GYRO MODE.–The directional gyro mode utilizes change of heading (yaw) information from the directional gyro in the displacement gyroscope assembly. When the directional gyro mode is initially selected, aircraft heading must be manually set into the azimuth system with the SET HDG control on the compass system controller. The directional gyro mode is used in areas where the earth's magnetic flux lines are distorted or when the flux valve malfunctions.

To select directional gyro mode, (1) place the mode switch to DG; (2) press and turn the SET HDG control until the attitude indicator sphere indicates actual aircraft heading; and (3) insure that the N-S switch is set to local hemisphere, turn the LAT control to local latitude, and readjust it for each 5° change in latitude.

NOTE: Failure to set the N-S switch to local hemisphere adds to the heading error produced by apparent precession. If the N-S switch cannot be set to local hemisphere, turn the LAT control to 0.

SLAVED MODE.–The slaved mode utilizes magnetic heading from the flux valve and change of heading (yaw) from the directional gyro. The flux valve signal serves as the reference and the gyro yaw signal provides stabilization and fast followup. Should the change of heading signals from the two sources differ, the flux valve signal determines the final magentic heading output for the system. Because system accuracy depends upon the condition of the earth's magnetic field, the slaved mode should not be used in latitudes greater than 70°, in areas where the magnetic field is distored, or when the flux valve malfunctions.

To select slaved mode proceed as follows:

1. Turn the mode switch on the compass system controller to the SLAVED position.
2. Allow 10 seconds for automatic fast synchronization, and check the SYNC IND meter for center scale indication. There will be a slight deviation of the needle from center scale indication. This slight deviation of the needle from center position is corrected by the normal sync rate.
3. Momentarily place the mode switch to the SYNC position if the SYNC IND needle is off center after aircraft turns and maneuvers.

Bombing Modes

There are four bombing modes–loft, instantaneous over-the-shoulder, timed over-the-shoulder, and direct. The mode is selected by placing the LABS-OFF-DIRECT and the INST O/S-LOFT switches on the main instrument panel to the desired positions.

Before takeoff, the following information must be known: target information and bombing mode to be used, run-in altitude, speed and heading, time interval from the identification point to the pullup point, and the release angle.

NOTE: The bomb release angle must be adjusted for any gyro pitch error that may exist. The gyro pitch error correction is obtained from the Pitch Synchro Output Correction Chart on the displacement gyroscope assembly case. To make the correction, add algebraically the gyro pitch error correction to the required bomb release angle.

PRINCIPLES OF OPERATION

Before discussing the principles of operation of the AN/AJB-7, the reader should be familiar

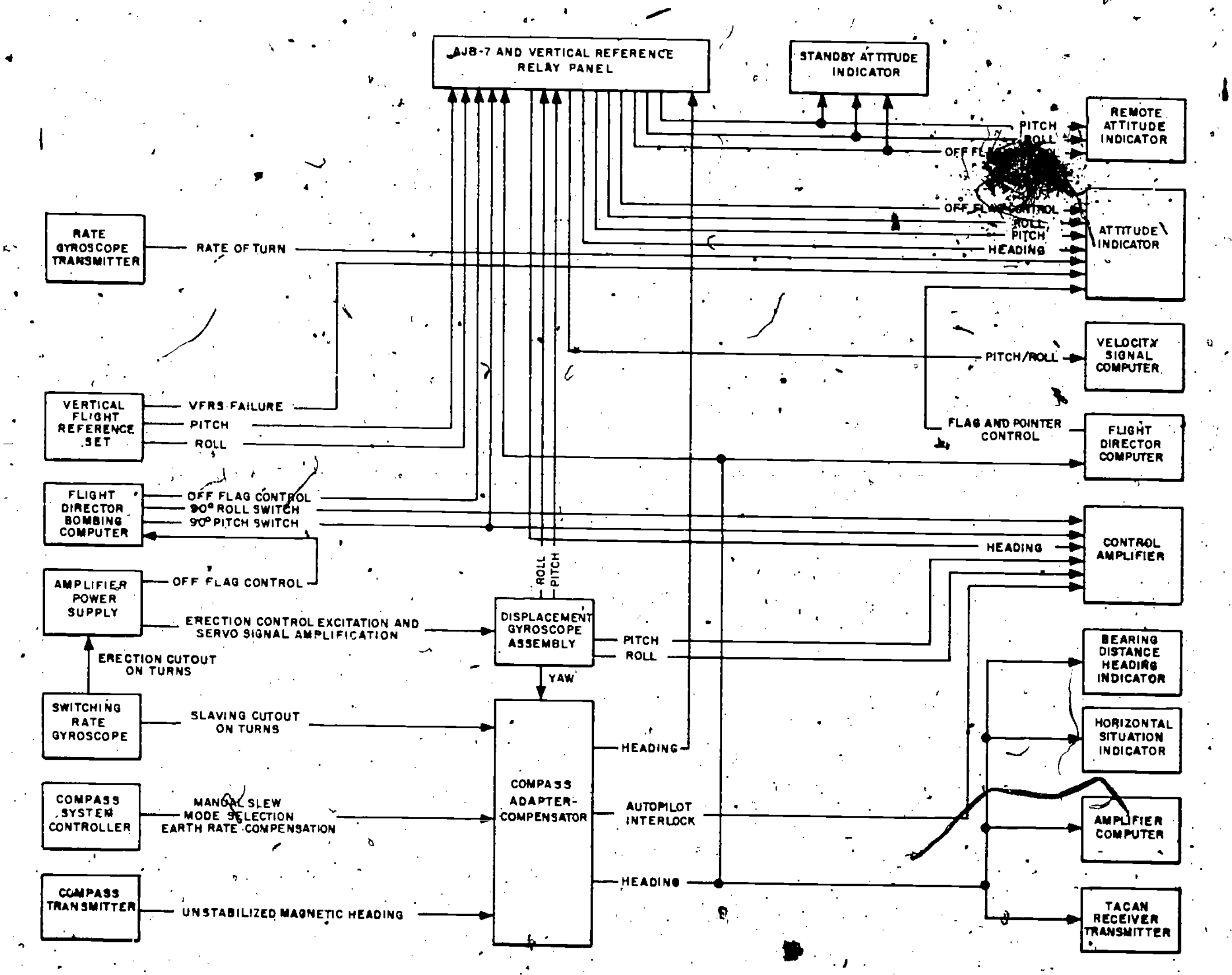

208.123

Figure 5-6.—Block diagram of the all-attitude reference system.

with the block diagrams in figures 5-6 and 5-7. Figure 5-6 shows the block diagram of the all-attitude reference system, and figure 5-7 shows the block diagram of the bombing system.

Displacement Gyroscope Assembly

The displacement gyroscope assembly, the heart of the system, consists of a vertical gyroscope and a directional gyroscope which are mounted within multiple, interacting gimbals; gyro torquers; pickoffs; and associated servo loops. All the components are mounted within a sealed container which also serves as the gyro frame. Figure 5-8 shows the gyros, gimbals, and associated servo loops.

VERTICAL GYROSCOPE.—The vertical gyroscope consists of gyro spin motor B101, an inner roll gimbal, a vertical gyro pitch gimbal, an outer roll gimbal (common to both gyros), and the displacement gyroscope frame. The frame is mounted to the displacement gyroscope assembly case and, therefore, follows all aircraft maneuvers. The outer roll gimbal, which is mounted in the frame, may rotate 360° about

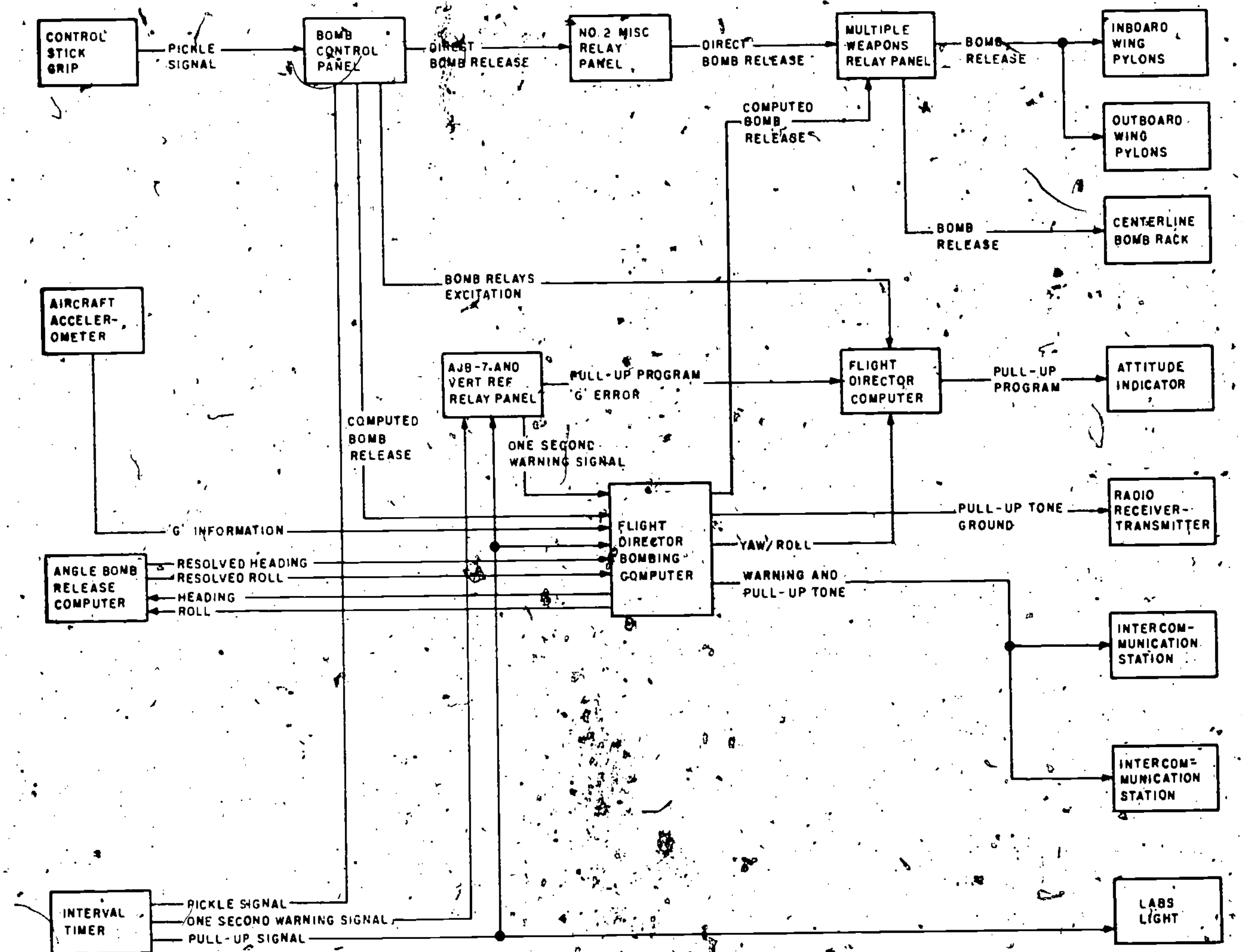

208.124

Figure 5-7.—Block diagram of the bombing system.

the roll axis, but it follows the aircraft in pitch and yaw. The vertical gyro pitch gimbal, mounted in the outer roll gimbal may rotate 360° about the pitch axis, but it follows outer roll gimbal movements in roll and yaw. The gyro spin motor may rotate ±85° in roll, but it follows the vertical gyro pitch gimbal in pitch and yaw. Mechanical stops (not shown) limit the movement of the inner roll gimbal to prevent alignment of the vertical gyro spin axis to the vertical gyro gimbal pitch axis. Such an alignment would allow the vertical gyro gimbal to spin about the pitch axis (gimbal lock).

DIRECTIONAL GYROSCOPE.—The directional gyroscope consists of gyro spin motor B201, a leveling gimbal, an azimuth gimbal, and a directional gryo pitch gimbal. The directional gyro pitch gimbal, which is mounted in the outer roll gimbal, may rotate 360° about the pitch axis, but it follows the outer roll gimbal in roll and yaw. The azimuth gimbal, mounted in the directional gyro pitch gimbal, may rotate 360° about the yaw axis, but it follows the directional gyro pitch gimbal in pitch and roll. Directional gyro spin motor B201 is mounted in the azimuth gimbal; it may rotate

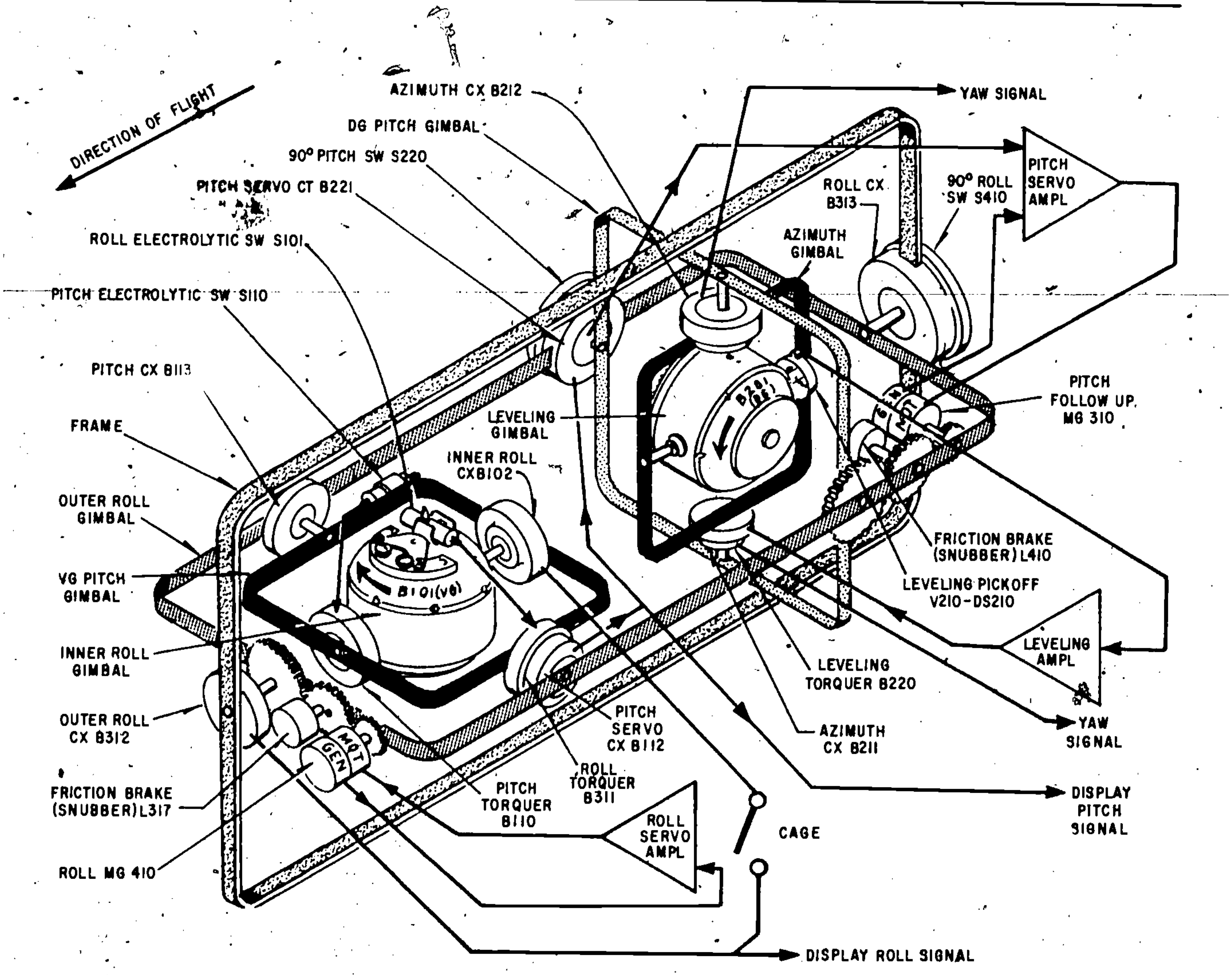

208.125

Figure 5-8.—Displacement gyroscope assembly.

±85° about the roll axis. Mechanical stops (not shown) prevent gimbal lock.

GYRO START AND ERECTION CYCLE.—The purpose of the start and erection circuitry is to provide accurate pitch, roll, and azimuth information in the shortest possible time. The method in which this is done is discussed in the following sequence (fig. 5-9).

1. During the first 12 seconds after the application of power, the outer roll gimbal is driven or "caged" to a position which places the pitch gimbals of the vertical and directional gyros parallel to the aircraft pitch axis; the power OFF flag in the attitude indicator is in view; the spin motors of the vertical and directional gyros are accelerating slowly; vertical gyro pitch erection and directional gyro azimuth synchronization are occurring rapidly.

NOTE: Gyro spin motors are run at a slow rate to facilitate the fast pitch erection of the vertical gyro and the fast azimuth synchronization of the directional gyro. During this time interval, there is no pitch erection voltage applied to the directional gyro servo motors and no roll or leveling erection is taking place in either gyro.

2. From 12 to 60 seconds after application of power, the outer roll gimbal remains "caged"; the power OFF flag in the attitude indicator remains in view; full torque voltage is applied to the gyro spin motors; leveling erection occurs; high pitch and roll erection takes place; the directional gyro pitch gimbal is servoed to the vertical gyro pitch gimbal position; and fast azimuth synchronization is still taking place.

3. After power has been applied for 60 seconds–completing the start cycle–the outer roll gimbal is servoed to the inner roll gimbal position; the power OFF flag is deflected out of view; the spin motors continue to receive full torque voltage; leveling erection continues; and normal pitch and roll erection and normal azimuth synchronization take place.

GYRO LEVELING.–The vertical gyro roll and pitch erection circuits erect the spin axis of the vertical gyro to gravity-vertical by leveling the inner roll and vertical gyro pitch gimbals. Roll and pitch electrolytic switches, mounted on the inner roll and vertical gyro pitch gimbals respectively, sense unlevel conditions of the gimbals and activate torquers. The torquers

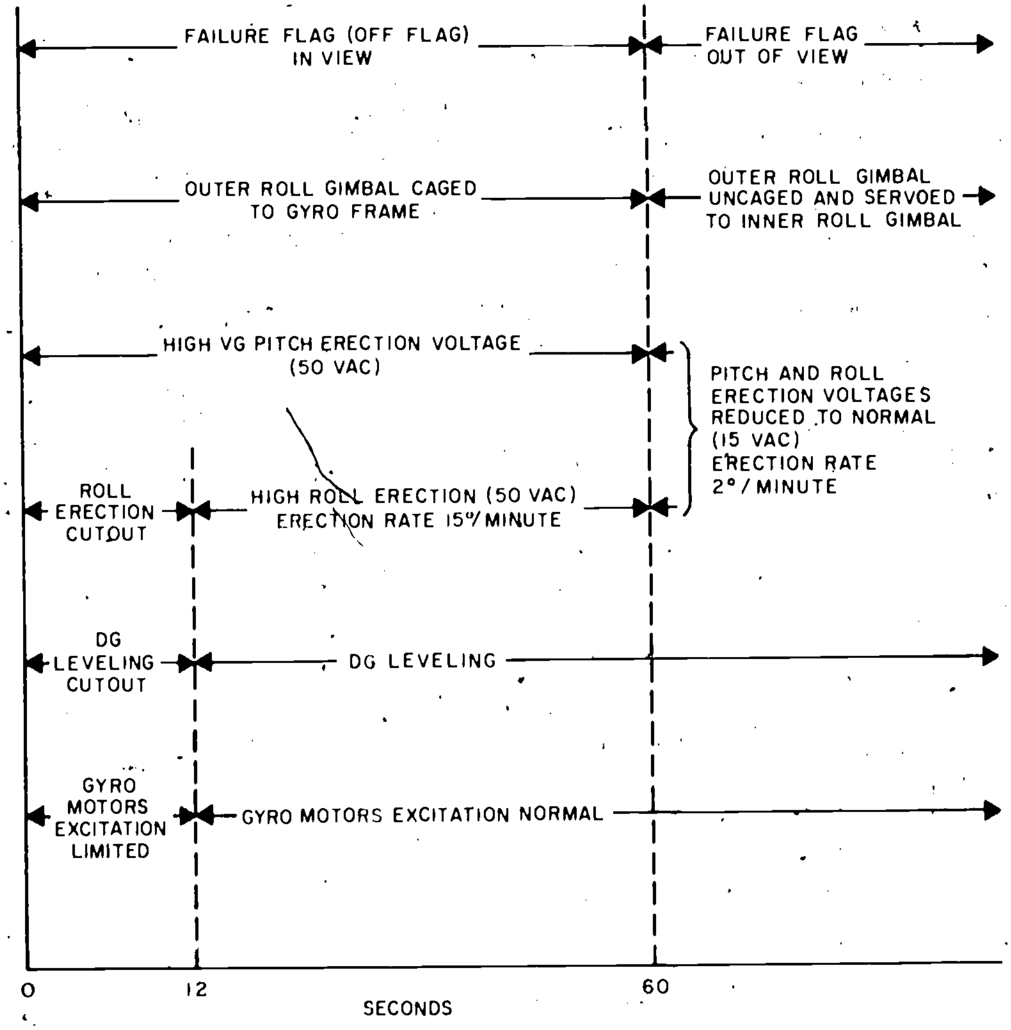

208.126

Figure 5-9.–Displacement gyroscope start cycle.

precess the gyro to level the gimbal until the corresponding electrolytic switch is leveled.

The directional gyro leveling servo loop erects the spin axis of the directional gyro to a level position (horizontal). The leveling lamp, DS210, mounted on the azimuth gimbal, activates the photocells through the shutter mounted on the directional gyro leveling gimbal. If the gimbal is not level, the photocells receive unequal amounts of light and apply different signals to the leveling modulator. The leveling modulator detects the difference and develops a signal which, when amplified, drives the leveling torquer in the direction required to level the gimbal. When the photocells receive equal amounts of light, there is no output from the leveling modulator.

The directional gyro pitch gimbal is servoed to the vertical gyro pitch gimbal so that their pitch gimbals are perpendicular to each other. Since the vertical gyro pitch gimbal is maintained horizontal to the surface of the earth, the directional gyro pitch gimbal is maintained perpendicular to the surface of the earth by maintaining its pitch gimbal perpendicular to the vertical gyro pitch gimbal.

DISPLACEMENT GYROSCOPE FAILURE WARNING.–Under the following conditions, a failure flag OFF indication in the attitude indicator will be produced, warning the pilot that his attitude information is unreliable:

1. A voltage at the centertap of the vertical gyro three-phase spin motor B101 caused by loss or reduction of one of the excitation phases, or by a defective B101 winding.
2. A large roll error signal, obtained at the input of the roll amplifier, which signifies that the outer roll gimbal is out of correspondence with the inner roll gimbal.
3. A large pitch error signal, obtained from directional gyro pitch servocontrol transformer CT B211, signifying that the directional gyro pitch gimbal is out of correspondence with the vertical gyro pitch gimbal.

Attitude Indicating Functions

The following description of the attitude indicating functions is made under the assumption that the compass controller PRIM-STBY switch is in the STBY position. When the switch is in the PRIM position, the AN/ASN-70, instead of the displacement gyro, furnishes the attitude reference information.

INDICATOR ROLL SERVO LOOP.–The roll attitude-reference signal is obtained from the displacement gyro outer roll gimbal control transmitter. This signal is applied to a roll control transformer located in the attitude indicator housing. The signal is summed with rate and sphere position feedback signals through a roll amplifier to the control phase of a motor-generator. The output of the roll amplifier drives the motor of the roll motor-generator, which is geared to the indicator sphere and the rotor of the roll control transformer, until the error signal in the roll control transformer is reduced to a null. This results in the servo loop being at rest in a new position. The generator of the roll motor-generator provides an inverse feedback signal to the input of the roll amplifier which is proportional to the speed of the motor. This serves to damp the servo loop, providing maximum sensitivity without overshooting. A roll potentiometer on the back of the indicator is used to compensate for any small errors (up to ±2°, made by maintenance personnel only) in the servo loop or in the displacement gyro installation.

INDICATOR PITCH SERVO LOOP.–Operation of the pitch indicator servo loop is the same in principle as the roll servo loop. However, the pitch servo loop has an added function which is pitch trim fade. The pitch trim fade circuit offers a continuously variable pitch trim sensitivity which is maximum at 0° and 180° pitch attitude, and zero at the 80° climb and dive attitudes. Included in the pitch trim fade circuit is the PITCH TRIM resistor, which is an operating adjustment mounted at the front of the attitude indicator. The PITCH TRIM control is used to adjust the sphere to a zero pitch indication for easy pilot reference whenever a positive or negative angle of attack must be assumed in order to maintain a constant cruise altitude. The purpose of the pitch trim fade circuit is to gradually and smoothly remove the effects of the trim setting on the indicator pitch presentation when the aircraft goes into a climb or dive maneuver.

The pitch trim fade resistor is variable through 360°, and it is geared to the pitch servo train. Its output is transformer coupled across the PITCH TRIM potentiometer. At 0° and 180° pitch, maximum voltage is coupled across the PITCH TRIM potentiometer; and at the 80° points, the voltage across the PITCH TRIM potentiometer is zero.

INDICATOR AZIMUTH SERVO LOOP.–Operation of the azimuth servo loop is the same as the roll loop except that it receives its input information from azimuth control differential transmitter CDX B208, located in the compass adapter. CDX B208 receives an electrical input from the displacement gyro azimuth synchro and a mechanical input from the compass adapter slaving and correction servomotor. The compass adapter function is explained in the discussion on the azimuth system.

Azimuth System

In the following discussion on the azimuth system, refer to figure 5-10.

DG MODE OPERATION.–In the DG mode of operation, only gyro azimuth information is displayed on the attitude indicator sphere. In this mode, a heading reference is obtained by manually slewing the attitude indicator to the desired heading by the SET HDG switch on the compass controller. Apparent and real drift compensating circuitry is utilized in the DG mode of operation to minimize the effects of known directional gyro drift errors.

Referring to figure 5-10, note that two azimuth transmitters, CX B212 and CX B211 in the displacement gyroscope, supply azimuth information to the compass adapter. Azimuth control transmitter CX B212 supplies azimuth information to the attitude indicator azimuth servo loop through azimuth control differential transmitter CDX B208. In DG mode operation, CDX B208 has a mechanical input to its rotor which compensates for directional gyro drift.

Azimuth control transmitter CX B211 supplies directional gyro azimuth information to the gyro actuated servo loop within the compass adapter. The gyro actuated servo loop provides a number of functions which are discussed in detail below.

Gyro Actuated Servo Loop.–If the mechanical rotor-stator relationship of gyro control transformer CT B206 in the compass adapter is not in correspondence with the rotor-stator relationship of azimuth control transmitter CX B211 in the displacement gyro, an error signal will be applied to the input of azimuth amplifier A1. The push-pull output of amplifier A1 is applied to the control winding of the 2-phase servomotor of azimuth motor-generator MG201. The output of the motor is geared to heading data transmitters B202, B203, B204, and B205; to the wiper of a distributor potentiometer in the 24-point compensating network for the flux valve; to the rotor of compass control transformer CT B207; and to the rotor of gyro control transformer CT B206. Also connected to the motor shaft is the shaft of the velocity generator section of MG201. The generator develops a voltage proportional to motor speed which is fed back to the input of amplifier A1 180° out of phase with the error signal.

Assuming that the aircraft is initially steady on a constant heading with the servo loop at rest, the rotor-stator relationship of B206 will be coincident with the rotor-stator relationship transmitted electrically by B211. If the aircraft now makes a 30° heading change, this change in position between the stable directional gyro and the aircraft will be measured by B211 and transmitted to B206. As the aircraft turns, the error signal output from B206 is amplified by azimuth amplifier A1 and drives MG201. MG201 drives the rotor of B206 to track very near the null, lagging just enough to maintain sufficient error signal to keep the servo loop moving. At the completion of the 30° heading change, the data shaft has moved 30° and MG201 stops. The heading data transmitters indicate the new heading.

Gyro Drift Compensation.–The directional gyro, and therefore the reference signal from

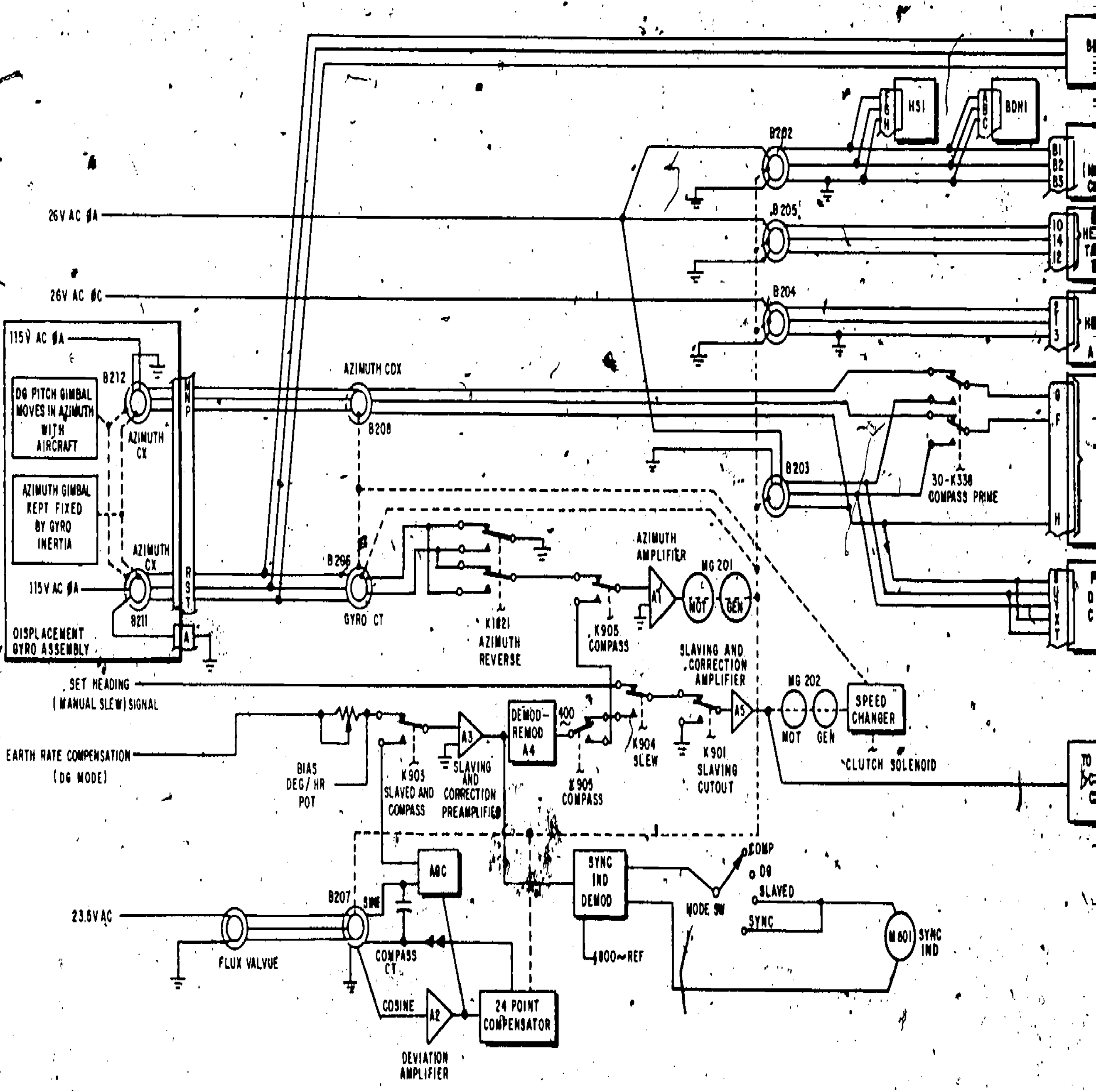

Figure 5-10.—Azimuth channel servo loops.

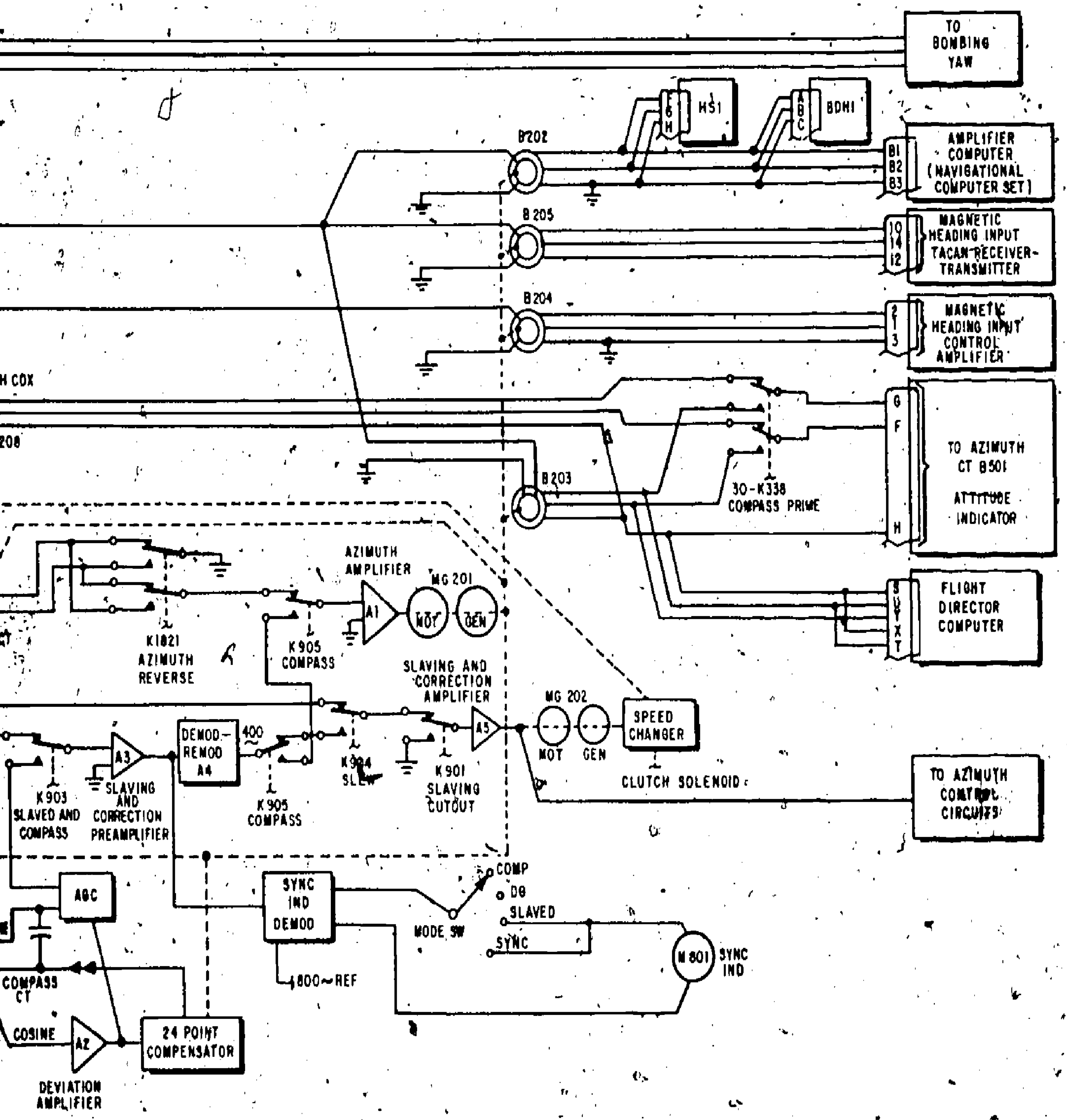

208.127

gure 5-10.—Azimuth channel servo loops.

B206, is subject to two types of drift–real and apparent. Real drift is caused by mechanical imperfections in gyro construction. Apparent drift is caused by rotation of the earth about the "space reference" gyro gimbal. Both types of drift are compensated for to a large extent by driving the stator of B206 and the rotor of CDX B208 in the direction and at the rate required to counteract the drift.

The signal for compensating "real" drift is obtained by setting the zero-center BIAS DEG/HR adjustment control on the compass adapter to the dial indication equal in magnitude but opposite in direction to the known directional gyro drift. The signal for compensating apparent drift is obtained at the LAT control on the compass controller, whose dial is calibrated from 0° to 90°, since the apparent drift is proportional to the sine of the latitude. The direction of apparent drift is opposite in the two hemispheres; therefore, the N-S switch is provided on the compass controller to reverse the phase of the latitude compensation signal.

The real drift signal and the apparent drift signal are summed and applied through closed contacts of relay K903 to the input of slaving and correction preamplifier A3. The resultant signal is amplified by A3, stripped of quadrature voltages by slaving and correction demodulator-remodulator A4, and applied through contacts of relays K905, K904, and K901 to the input of slaving and correction amplifier A5. The push-pull output of A5 is applied to the control winding of slaving and correction servo-motor MG202. MG202 drives the stator of B206 and the rotor of B208 through a speed decreaser at a speed proportional to the applied correction signal.

With the aircraft on a constant flight course in respect to magnetic North, the directional gyro within the displacement gyro is allowed to drift both "real" and "apparent". The DG output which is constantly changing a known amount is compensated for by servo loops within the compass-adapter to maintain the heading indicator on a constant heading.

SLAVED MODE OPERATION.–In the slaved mode of operation, the gyro-actuated servo loop remains the same as that for free mode operation. The slaved mode operation differs in that the actuating signal for the servo loop which drives the stator of B206 is a magnetic heading signal from the flux valve. This servo loop is called the slaving loop in slaved mode operation and is a closed loop; that is, it is mechanically linked back to the gyro-actuated servo loop.

Heading information form the earth's magnetic field is fed from the flux valve to the rotor of B207, which is the compass control transformer located in the compass adapter. CT B207 has two stator windings which are wound 90° apart. The error signal, which is applied to slaving and correction preamplifier A3 through the AGC circuitry, is a sine function, while the signal applied to deviation amplifier A2 is a cosine function; that is, it is maximum when the error (sine) signal is minimum.

Because of the saturation characteristics of the flux valve, the error signal is at a frequency of 800 Hz. This 800-Hz signal must be converted to a line referenced 400-Hz signal in order to operate slaving and correction motor MG202. The required conversion is accomplished by slaving and correction demodulator-remodulator A4. The 800-Hz signal is demodulated to direction sensitive dc, which in turn is remodulated to provide a phase sensitive 400-Hz signal at the output. The output of A4 is applied through contacts of relays K905, K904, and K901 to the input of slaving and correction amplifier A5, where it is amplified and drives slaving and correction motor MG202. MG202 drives the stator of B206 and the rotor of B208 through the speed decreaser.

Automatic Gain Control.–The magnetic field intensity varies at different geographical locations, causing variations in the error signal for the same given amount of error. During normal slaved mode operation, the voltage induced in the cosine winding is proportional to the magnetic intensity level. This signal is applied to the AGC network, thus providing maximum attenuation of the error signal for strong magnetic intensity levels and minimum attenuation for weak magnetic intensity levels, accomplishing a relatively constant overall sensitivity.

Flux Valve Compensation.—Flux valves contain tracking errors which cannot be completely eliminated by indexing and magnetic compensating adjustments. In order to further reduce the magnetic heading error, an electrical 24-point flux valve compensating network is employed. The network consists of a 360° continuous distributor potentiometer which is mechanically linked to the data shaft, and 24 deviation compensation adjustment potentiometers connected across the output of deviation amplifier A2 with their wipers connected at 15° intervals about the distributor potentiometer. The amount and direction of deviation compensation set in at a given 15° interval is dependent upon the distance and direction the applicable deviation compensation potentiometer is moved from center.

If a fixed excitation voltage for the network were used, the deviation compensation portion of the signal applied to slaving and correction preamplifier A3, and thence the amount of correction, would vary with field strength. In order to keep the correction sensitivity constant, therefore, the network excitation is derived from the output of deviation amplifier A2, which is proportional to field strength.

Slaving Action.—Assuming that the directional gyro has drifted out of correspondence with the magnetic heading reference, the data shaft will tend to drive to this false reference. However, the rotor of compass CT B207 is linked to the data shaft and is rotated an equal distance. This causes an error signal at the input to the slaving loop, which actuates slaving and correction servomotor MG202, driving the stator of B206 in the direction to reduce the error, resulting in the data shaft being driven back into correspondence with the magnetic heading reference. In practice, the slaving loop is so tight that the data shaft does not get perceptibly out of correspondence with the magnetic heading signal, except during turns when slaving is interrupted by the switching rate gyro.

When the aircraft turns, no slaving takes place. If, for example, the aircraft makes a 30° heading change, the gyro-actuated servo loop will drive the data shaft, and thence the rotor of B207, 30°. However, the flux valve, being mounted to the airframe, rotates 30° in the earth's flux field, keeping the input signal to the slaving loop at null.

Fast Synchronization and Slewing.—During normal slaving operation, the output of the slaving and correction servomotor is geared down approximately 43,000 to 1 by the speed decreaser. When the speed decreaser is energized, the gear ratio is changed to approximately 12 to 1, which greatly increases the speed of rotation of the stator of B206 and the rotor of B208 for a given output from the slaving and correction amplifier. The speed decreaser is energized whenever SYNC is selected by the compass controller mode switch or whenever manually slewing by the SET HDG switch on the compass controller.

Fast synchronization is effected automatically during the start cycle or whenever the heading mode is switched from DG to slaved. Fast synchronization may also be initiated manually be momentarily placing the compass controller mode switch in the SYNC position when in the slaved mode. When switching from the DG mode to the slaved mode, fast synchronization will continue until the error signal is reduced to a very small value, at which time normal slaving will resume. Momentarily placing the compass controller mode switch to SYNC will also produce fast synchronization which continues until the slaving error signal has been reduced to a very small value, as for automatic fast synchronization.

Slewing is initiated by depressing the SET HDG knob on the compass controller. This deenergizes realy K904, shifts the speed decreaser into high speed operation, and connects the wiper of the SET HDG potentiometer to the input of the slaving and correction amplifier. The slewing direction and speed are dependent on the direction and distance the knob is turned from center.

COMPASS MODE OPERATION.—In the compass mode of operation, directional gyro azimuth control transmitter CX B211 is disconnected from azimuth amplifier A1, and flux valve heading information is connected in its place. When the compass mode is selected, compass relay K905, free-slave relay K903, and automatic pilot cutout relay K907 (not shown) are energized. The flux-valve-actuated circuitry is connected to the A1 input. The motor of MG201 will drive compass CT B207 to null out any loop error signal. This loop is a highly sensitive loop compared to the slaving loop, which is operated through a large ratio gear reduction. Since the response is instantaneous, no SYNC IND meter indication or fast synchronization is required.

The attitude indicator azimuth servo loop, in compass mode operation, receives heading information from the output of heading data control transformer CT B203, instead of CDX B208.

Automatic Pilot Cutout.–The automatic pilot is decoupled from the azimuth system (1) when operating in the compass mode, (2) when the SET HDG knob is depressed, and (3) during fast synchronization. This circuitry is not shown in figure 5-10.

BOMBING FUNCTIONS AND SPECIAL SWITCHING

Loft Bombing Run

INITIAL CONDITIONS.–To set in the initial conditions for a loft bomb run, place the switches on the bomb control panel to the following positions: LABS, READY, and LOFT (see fig. 5-4). Switching contacts are also closed in the multiple weapons relay panel to complete the circuit from the bomb release switch (pickle button) to the interval timer, which will begin rundown when the pickle button is depressed.

CIRCUIT CONDITIONS AFTER DEPRESSING PICKLE BUTTON.–Depressing the pickle button applied a 28-volt dc signal to the interval timer and rundown begins immediately. The 28-volt pickle signal is also applied to the flight director bombing computer, causing switching which disconnects the horizontal and vertical flight director pointers from the biasing supply. This allows the pointers to be deflected to the center of the attitude indicator. One second before pullup time, the interval timer supplies a ground for the 1-second warning relay. The warning relay then supplies a quarter-second 28-volt dc pulse to energize the tone relay in the flight director bombing computer which applies a 1200-Hz tone in the headsets.

CIRCUIT CONDITIONS AFTER PULLUP.–At the end of the preset time interval, the timer provides a 28-volt dc signal which energizes the LABS lamp; energizes the tone generator which produces a steady tone until the bomb is released or canceled; energizes the displacement gyroscope cage control relay which switches the input of the roll servo loop to the inner roll synchro; starts the g programer which furnishes pullup information to the horizontal director pointer; and switches azimuth information to the vertical director pointer. The pullup signal is also applied to one side of the low angle and high angle release switches in the release angle computer, but the switches are open so no release occurs at this time.

Figure 5-11 shows the block diagram of the loft bombing functions from pullup to bomb release.

Referring to figure 5-11, during the interval between pullup and bomb release, the loft bombing circuitry may be considered as performing the following two primary and independent functions:

1. Operation of the horizontal director pointer, which supplies the pilot with pullup information.
2. Operation of the vertical director pointer, which supplies the pilot with roll-yaw attitude information.

Horizontal Flight Director Pointer Operation.–The g programer begins operation when it receives the pullup signal from the interval timer, and it continues until the pickle switch is released. During the first 2 seconds after pullup, the g programer gradually increases a programed 1-g signal to a 4-g signal. After the initial 2 seconds, the signal level is maintained at 4 g's throughout the remainder of the maneuver. The g level being experienced by the aircraft as

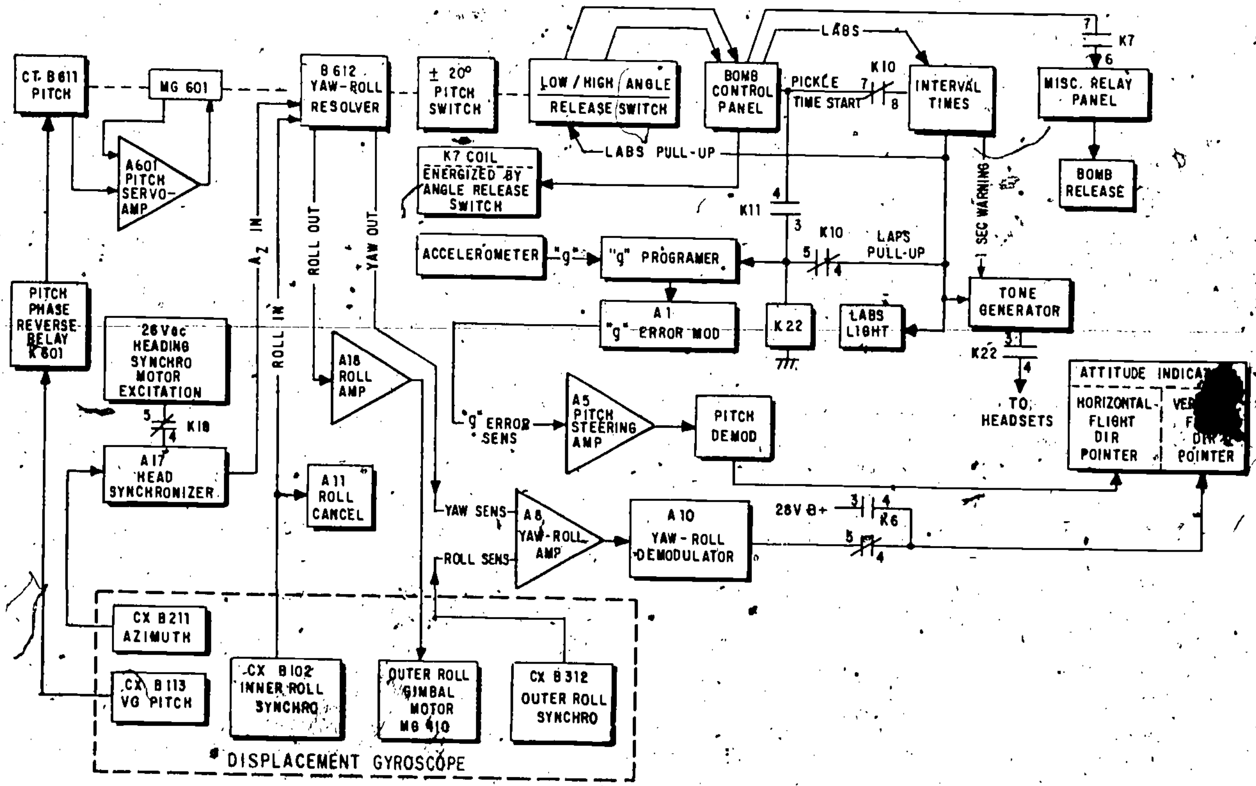

208.128

Figure 5-11.—Block diagram of loft-bomb circuit functions at pullup.

sensed by the accelerometer is compared to the programed g level. The resultant is applied to the input of g error modulator A1. The g error modulator converts the signal to a 400-Hz ac signal and then applies it to pitch steering amplifier A5 where it is amplified and passed on to the pitch demodulator. The signal is demodulated and applied to the horizontal flight director pointer in the attitude indicator. In order to keep the pointer centered, the pilot must enter into the loop as programed, then must hold 4 g's until inverted flight is reached. If the g force as sensed by the accelerometer is less than the programed g force, the pointer will rise above center; if the accelerometer sensed g force is greater than the programed g force, the pointer will move below center.

Vertical Flight Director Pointer Operation.—The vertical flight director pointer is controlled by the gimbal action in the displacement gyroscope assembly. As the pitch angle is increased, the displacement gyro inner roll gimbal becomes less sensitive to aircraft roll and more sensitive to yaw. At the same time, the azimuth gimbal becomes less sensitive to yaw and more sensitive to roll, until at 90° pitch the inner roll gimbal would sense pure yaw and the azimuth gimbal would sense pure aircraft roll. In order to provide accurate roll and yaw signals during bombing maneuvers, the information from the inner roll and azimuth synchros is resolved as a function of aircraft pitch angle. This is accomplished by yaw-roll resolver B612 whose rotor is mechanically linked to the release angle computer pitch servo loop.

Pitch CT B611 in the release angle computer receives its input signal from VG pitch CX B113 through contacts of pitch phase reverse relay K601. The B611 rotor output drives pitch motor MG601 via pitch amplifier A601. Loop damping is provided by the MG601 rate generator section. The rotor of CT B611 is geared to MG601; and as the motor drives to keep the CX output signal at null, it also keeps the loop data shaft in correspondence with the aircraft pitch attitude. Geared to this shaft are the high angle and low angle bomb release switches and yaw-roll resolver B612.

The resolver is effectively a variable coupling transformer with two windings (inner roll and azimuth) on its rotor and two windings (roll and yaw) 90° apart on its stator. An input signal may be applied to each rotor winding and an output signal may be taken off each stator winding. Since the rotor of the resolver is linked to the pitch data shaft, the signal induced in each stator winding is a mixture of the two input signals as a function of pitch angle. At zero pitch attitude, the roll signal induced in the roll stator winding is maximum and the azimuth signal is minimum while the roll signal induced in the azimuth stator winding is minimum and the azimuth signal is maximum. At 90° pitch attitude, the reverse is true. However, provisions are made to keep the inner roll signal from affecting the azimuth synchronizing loop.

During all-attitude operation, the outer roll gimbal is slaved directly to the inner roll gimbal as previously explained. If an Immelmann maneuver were performed, the outer roll gimbal would have been driven 90° as the aircraft approached vertical flight and an additional 90° shortly after the aircraft passed through vertical flight. The reason for this is that as the outer roll gimbal pitch attitude changes, it must be driven further and further to null out any slight aircraft yaw, until it is driven 90° as vertical flight is reached. The inner roll sensing reverses as the aircraft passes through vertical flight, causing the outer roll gimbal to be driven an additional 90° while moving toward inverted flight. After rollout the outer roll gimbal is positioned the same relative to both the aircraft and the earth as it was prior to the performance of the Immelmann maneuver. Because of the 180° rotation of the outer roll gimbal when going from level flight to inverted flight, the resultant pitch signal would approach 90°; and instead of moving through toward 180°, it would return toward zero. This condition is acceptable for operating the attitude indicator sphere, since the sphere would rotate 180° in roll, providing the same effect as a 180° rotation in pitch.

However, LABS bombing operations require a continuous pitch signal throughout the maneuver until the bomb is released; therefore, the outer roll gimbal must be maintained level in roll. The actuating signal for the displacement gyro roll servo loop, instead of being applied directly from inner roll CX B102, now comes from the combination of roll and azimuth information present in the B612 roll output winding via roll amplifier A18.

Since any errors present during the maneuver in either roll or yaw are corrected by rolling the aircraft, the two signals are mixed together and applied to the attitude indicator vertical director pointer as a high sensitivity error display. The roll signal is obtained from outer roll CX B312 in the displacement gyro. This signal is applied to the input of yaw-roll amplifier A8.

The yaw error signal is obtained from the yaw output winding of yaw-roll resolver B612 and applied to amplifier A8. In amplifier A8, the two signals are mixed, and the resultant is amplified before being transformer coupled to the input of yaw-roll demodulator A10. In the demodulator, the signal is converted to a direction sensitive dc before being applied through contacts of bomb cancel relay K6 to the vertical director pointer.

Immediately before pullup, the pilot assumes the required heading. This is the reference attitude from which any subsequent azimuth deviations are sensed. The yaw input to yaw-roll resolver B612 is obtained from azimuth synchro B211 via heading synchronizer A17. Before pullup, the heading synchronizer servo loop is completed and any heading change sensed by CX B211 is nulled out at the heading synchronizer CT rotor, maintaining the required zero reference. At pullup, relay K18 energizes, removing the excitation voltage from the heading synchronizer motor, which deactivates the servo loop. Now, any deviation from the reference azimuth attitude will appear as a signal in the azimuth input winding of resolver B612. The pilot must correct this condition to return the vertical flight director pointer to center.

The signal from inner roll synchro B102 is coupled to roll cancel relay driver A11. If the aircraft yaws 30° or more as it approaches vertical flight, this signal will be large enough to increase the A11 output impedance sufficiently to deenergize the roll cancel relay, which in turn energizes the bomb cancel relays, thus canceling automatic bomb release. Releasing the pickle button any time after pullup will also cause bomb cancel. In either case, the LABS lamp goes out and the 1200-Hz tone ceases.

CIRCUIT FUNCTIONS AFTER BOMB RELEASE.—As the aircraft increases its pitch attitude, the low angle switch is driven correspondingly by the pitch data shaft in the release angle computer. Upon reaching the preset release angle position, the switch applies 28 volts dc to bomb release relay K7. This applies the 28-volt bomb release signal to the miscellaneous relay panel, which effects a release through the safe-ready switch of the bomb control panel. The LABS lamp will go out due to switching in the same relay panel. This switching action will also cause the 1200-Hz tone in the headsets to cease.

Energizing bomb release relay K7 also energizes bomb cancel relays K6 and K10. Once K6 and K10 are energized, they remain energized by hold-in contacts connected to the pickle line. Energized K10 removes power from the clutch and motor of the interval timer, allowing it to reset. Contacts 4 and 5 of K10 open, removing the 28-volt dc pullup signal from programer start relay K11, which is not deenergized at this time since it is held connected to the pickle line through its own contacts 3 and 4. The switching action, as a result of energizing K10, also restores displacement gyro roll and pitch erection and azimuth system slaving; disconnects the roll output of yaw-roll resolver B612 from the displacement gyro outer roll gimbal servo loop; deactivates the roll input to yaw-roll amplifier A8; and reactivates the heading synchronizer loop.

Energizing K6 switches the vertical flight director pointer from the yaw-roll demodulator to the 28-volt dc line, which deflects the pointer from view.

Resetting of the timer removes the 28-volts dc from the section of the pullup line not already broken by the contacts of K10. The cage relay and the bomb release relay are thus deenergized. The inner roll signal is reconnected to the input of the displacement gyro servo loop, referencing the outer roll gimbal directly to the inner roll gimbal. The computer set now has been returned to an all-attitude mode, except that the horizontal pointer display remains so that the pilot may complete his Immelmann maneuver.

Since bomb release (and therefore bomb cancel and return to all-attitude operation) occurs at a pitch angle less than 90°, it is unlikely that the DG pitch gimbal has gone through 90° pitch. Assuming that it does not, no change of state of the pitch segment switch will occur. However, the outer roll gimbal will rotate 180° while going through vertical flight, causing the roll segment switch to change state. After rollout, the roll segment switch will return to its original state.

Release of the pickle button removes the energizing voltage from relays K6 and K7, and K10, and the horizontal flight director pointer is deflected out of view. All-attitude operation is now fully restored.

Instantaneous and Timed Over-the-Shoulder Bombing Runs

In comparison to the loft method, no identification point or timed interval is used in the instantaneous over-the-shoulder mode. The pilot simultaneously depresses the pickle button and starts pullup. For this reason the pullup line is connected to the pickle line through the INST O/S switch contacts of the bomb control panel. Otherwise, circuit conditions prior to and immediately after pullup for both instantaneous and timed over-the-shoulder modes are identical to the loft method.

Both modes differ from loft in that bomb release and therefore bomb cancel occur after the aircraft has passed through 90° pitch angle. This has no significance, except for release angle, as far as the bombing circuitry is concerned. Its significance is effected in the displacement gyro gimbal action and the resulting switching.

In the loft mode, the DG pitch gimbal does not go through 90° due to the 180° rotation of the outer roll gimbal. In the instantaneous and timed over-the-shoulder modes, the loop reference signal remains resolved to give true aircraft roll information through 90°. Therefore, no rotation takes place.

If the outer roll gimbal—before starting the run—is in the position shown in figure 5-8, it is necessary to energize three relays in order to energize the pitch and yaw phase reverse relay (not shown). These are the 90° pitch relay, the 90° roll relay, and the ±20° pitch relay.

When the aircraft reaches vertical flight, the pitch segment switch will provide a ground, energizing the 90° pitch relay. Energizing the 90° pitch relay fulfills one of the three conditions required to energize the pitch and yaw phase reverse relay. Also, energizing the 90° pitch relay deenergizes the azimuth phase reverse relay which, in turn, reverses the sensing of the compass adapter azimuth servo loop to correct for the displacement gyro azimuth synchro not sensing the 180° heading change when the aircraft passes through vertical flight. The attitude indicator displays the opposite side of the sphere at this time, automatically presenting the proper heading.

Upon releasing the bomb (assuming a release angle greater than 90°), direct control of the outer roll gimbal is returned to the inner roll gimbal. Inversion of the outer roll gimbal in pitch causes a sense reversal between inner and outer roll gimbals. To keep the outer roll gimbal from driving 180° because of this sense reversal, phase reversing of the inner roll signal is effected at this time. This is accomplished by the open contacts of the now deenergized cage relay, which removes 28 volts dc from the coil of the roll phase reverse relay.

The aircraft continues the inside loop until inverted flight is reached, then rolls out. When 90° bank angle is attained, the roll segment switch will provide a ground, energizing the 90° roll relay, which fulfills the second of the three requirements for energizing the pitch and yaw phase reverse relay. If the maneuver has been correct, the aircraft will be well within the limits of the ±20° pitch segment switch providing an energizing path to ground for the ±20° pitch relay. This fulfills the third condition required for energizing the pitch and yaw phase reverse relay. Contacts of the pitch and yaw phase reverse relay in turn apply 28 volts dc to energize two pitch reverse relays and a yaw phase reverse relay. Contacts of these relays provide proper phasing to the input of the pitch steering circuit, the bomb release angle computer pitch servo loop, and the heading synchronizing servo loop, respectively. This establishes proper phasing for the next bombing run.

The pitch and yaw phase reverse relay will remain energized until another high angle release bomb run is completed; since it is held in by normally open contacts of the 90° pitch relay and the 90° roll relay and normally closed contacts of the ±20° pitch relay, all in parallel.

Direct Bombing Run

The direct method does not require computer set switching. Direct method is selected on the bomb control panel and, when the pickle button is actuated, bombs are released at that point.

Depressing the bomb release switch (pickle button) releases the bombs immediately when in the direct bombing mode if the SAFE, READY switch is in the READY position. The LABS light does not light in the direct mode delivery method.

Description of System Tie-In

The vertical reference set furnishes pitch and roll information to the computer set when the controller PRIM-STBY switch is in PRIM, except that during bombing functions the computer set displacement gyro becomes the primary reference. When the PRIM-STBY switch is in STBY the displacement gyro is the attitude reference for both all-attitude and bombing functions.

The remote attitude indicators use the displacement gyro as a reference in both positions of the PRIM-STBY switch. Their input signal phase in both roll and pitch is reversed if the position of the displacement gyro DG pitch gimbal requires it. The phase reversal is accomplished by roll and pitch transformers in the aircraft relay panel operating in conjunction with the displacement gyro DG pitch gimbal 90° pitch switch, the pitch phase reverse relay in the flight director bombing computer, and phase reversing relay in the aircraft relay panel.

Magnetic heading information is sensed by the flux valve and applied to the compass adapter. The compass adapter sends compensated magnetic heading information to the bearing-distance-heading indicator (BDHI), the horizontal situation indicator (HSI), the amplifier computer, the flight director computer, and the control amplifier.

The BDHI and the HSI present a compass card display. The amplifier computer converts the magnetic heading information to true heading. The flight director computer uses the heading information for bomb mode operation.

The control amplifier provides attitude reference signals to the automatic flight control system. It contains relays which are operated by the 90° pitch and 90° roll switches in the displacement gyro to provide correct output signal polarity. An interlocking signal from the computer adapter removes the compass adapter heading signal when it is erratic.

VERTICAL FLIGHT REFERENCE SET AN/ASN-70

The Vertical Flight Reference Set (VFRS) AN/ASN-70 currently in use on the F-4J aircraft, furnishes aircraft pitch and roll attitude, flightpath angle, and vertical acceleration information on the F-4J weapons system.

The reference set has been developed to provide the necessary verticality for highly accurate attitude sensing during dynamic flight conditions. Longitudinal and lateral accelerations, which normally cause errors in gravity-sensing vertical gyroscope erection systems, are compensated for in the reference set.

SYSTEM COMPONENTS

The vertical flight reference set (fig. 5-12) consists of two units—the vertical flight reference sensor and the vertical flight reference computer. The sensor is mounted on top of the computer to conserve space and wiring.

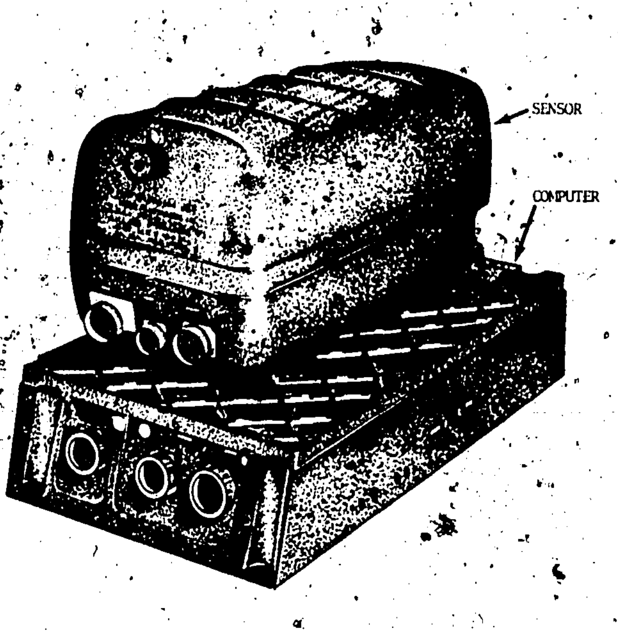

208.129
Figure 5-12.—Vertical Flight Reference Set AN/ASN-70.

The sensor is a hermetically sealed unit containing a vertical gyroscope (gyro) and a geocentric pendulum control (pendulum) in a common roll gimbal (fig. 5-13). The pendulum is stabilized in pitch by a pitch gimbal which is servoed to the gyro. The pendulum provides the necessary erection signals to the vertical gyro torquers to maintain the gyro at true vertical. A roll and pitch stabilized vertical accelerometer mounted in the sensor provides an output of vertical acceleration which is available for other subsystems and is used by the computer for flightpath angle computations.

The computer is a nonhermetically sealed unit containing all necessary electronics for operation of the reference set. Circuitry and mechanization are provided for flightpath angle and vertical velocity computation. The computer circuitry is arranged in modular form for easy maintenance.

The computer has twelve plug-in sealed modules and ten repairable printed circuit boards. The printed circuit boards are wired into the chassis circuits through stud terminals but may be displaced sufficiently to provide access to the mounted components.

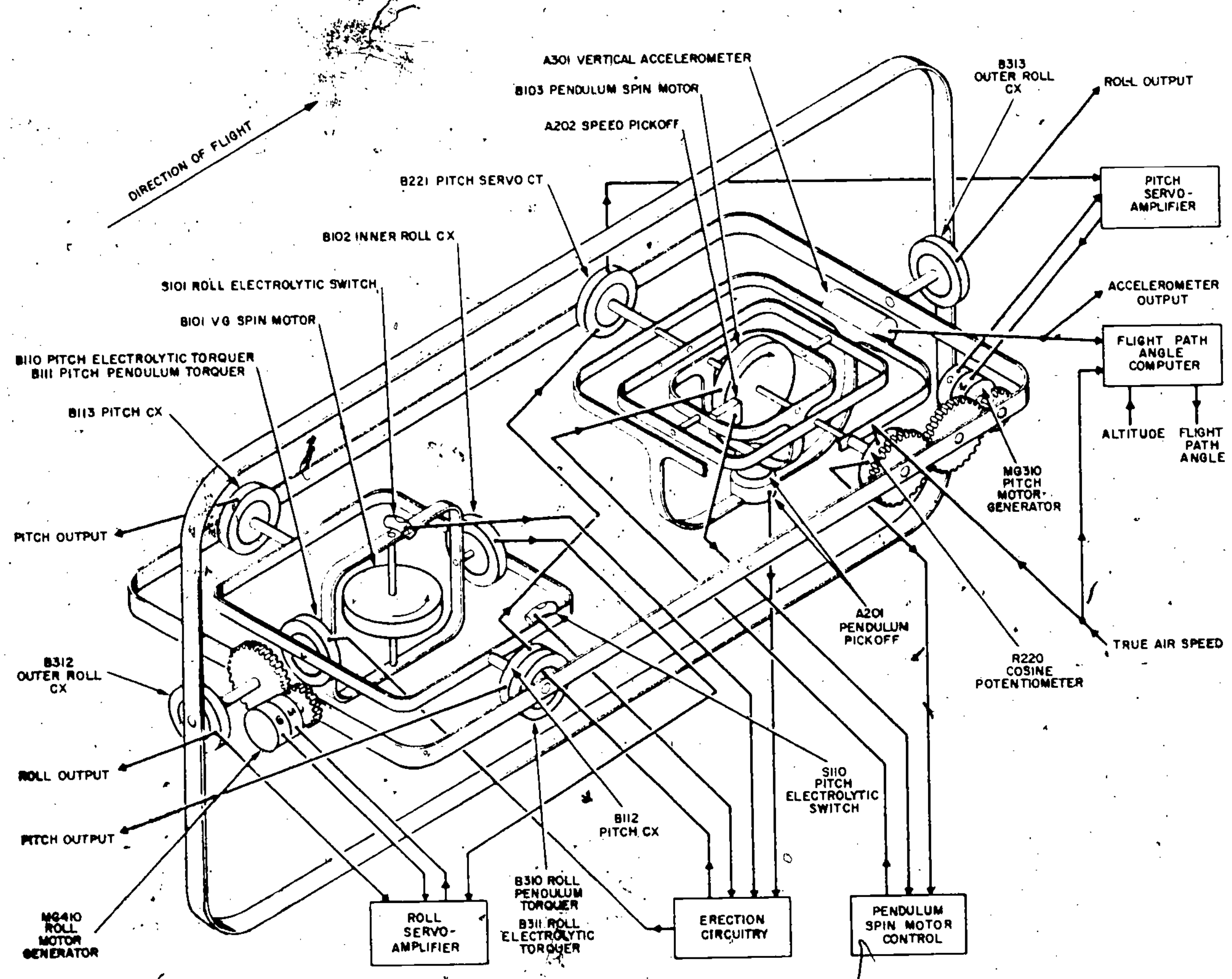

208.130

Figure 5-13.—Functional diagram of reference set.

FUNCTIONAL DESCRIPTION

Geocentric Pendulum

The pendulum is the vertical sensor of the reference set. Unlike conventional gravity sensors, it is not subject to verticality errors caused by longitudinal and lateral accelerations. Basically, the pendulum is a pendulous gyroscope with a variable speed spin motor. With this configuration, the pendulum can compensate for accelerations due to changing aircraft airspeed and turns.

Longitudinal accelerations occur as the aircraft airspeed changes as a result of changes in engine power setting, pitch attitude, or flight configuration (fig. 5-14). When airspeed changes, the pendulum has a tendency to swing away from vertical in the opposite direction of the acceleration. If the aircraft accelerates forward, the pendulum tends to swing rearward; slowing the aircraft causes the pendulum to tend to swing forward. Since the spin axis of the pendulum is perpendicular to the line of flight and the spin motor spins in the direction of flight, accelerating the spin motor causes the pendulum to swing forward, and decelerating the spin motor causes the pendulum to swing rearward. By accelerating or decelerating the rotor proportionally to changes in airspeed, the

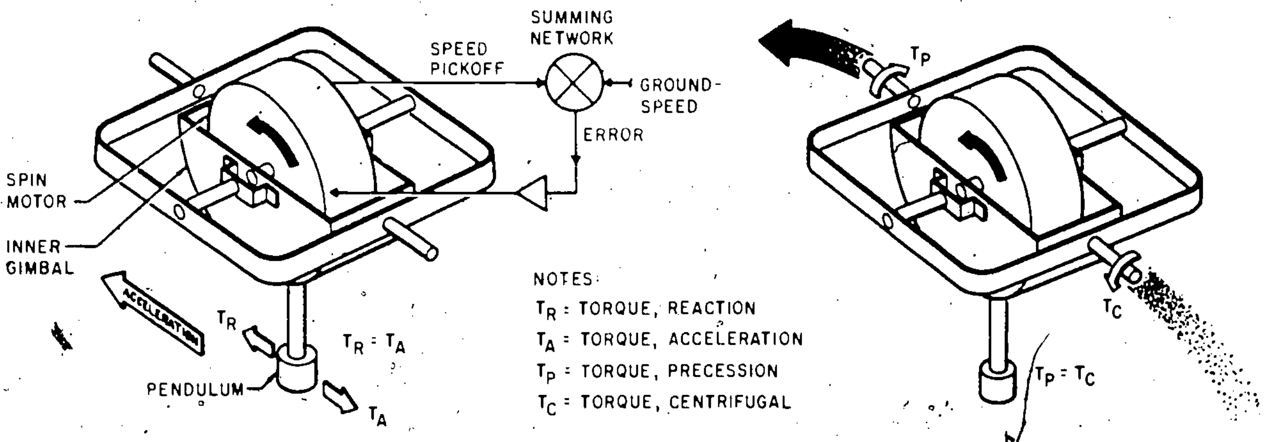

(A) LONGITUDINAL ACCELERATION (B) CENTRIFUGAL ACCELERATION

208.131

Figure 5-14.—Geocentric pendulum. (A) Longitudinal acceleration. (B) Centrifugal acceleration.

two opposing forces can be kept equal and the pendulum maintained vertical during longitudinal accelerations of the aircraft. For example, if the airspeed increases, the tendency of the pendulum to swing rearward can be canceled by proportionally accelerating the spin motor. With sufficiently accurate sensors and proper circuit calibration, the pendulum can maintain a high degree of vertical accuracy through a wide range of accelerations.

Verticality errors which would be caused by aircraft turns are canceled by the pendulum's gyroscopic property of precession. By adjusting the spin motor speed, and thereby its angular momentum, the precession torque of the pendulum can be kept equal to the centrifugal force of the turn, and the pendulum remains vertical. If the pendulum were strictly pendulous without any gyroscopic properties, the centrifugal force of the turn would swing it outward during turns. The amount of this deviation from vertical would be determined by the pendulosity of the pendulum, the airspeed, and the turn rate. On the other hand, if the pendulum were purely gyroscopic without any pendulosity, it would be precessed about the longitudinal axis by aircraft turns about the vertical axis. The amount of this precession torque is determined by the angular momentum of the spin motor and the turn rate. Since the spin axis is perpendicular to the line of flight and the spin motor spins in the direction of flight, precession is always toward the inside of the turn. Therefore, the outward swing of the pendulum caused by the centrifugal force of a turn can be canceled by the precession torque of the pendulum when these two forces are equal. To keep these two forces equal, the speed of the spin motor is kept proportional to the airspeed (the turn rate acts equally on both forces), and the pendulum remains vertical during turns.

The analytical expression for pendulum compensation of verticality errors caused by turning is

$$H\omega = PVa\omega$$

where

H = angular momentum of the spin motor
ω = aircraft turn rate
P = pendulosity
Va = airspeed

As in the case of longitudinal accelerations, airspeed is the horizontal component of aircraft speed, so at flightpath angles other than horizontal, the horizontal component must be computed.

Spin Motor Speed Control

The speed control circuit operates to keep the speed of the pendulum spin motor proportional to the horizontal component of airspeed. The two inputs to the circuit are pendulum spin motor speed and resolved airspeed. The resolved airspeed is the command signal which determines spin motor speed, while the spin motor speed input is fed back to maintain spin motor speed with a high degree of accuracy. (See fig. 5-15.)

The airspeed input signal for the reference set comes from the airspeed potentiometer in the aircraft's central air data computer. This dc input is amplified for the speed control circuit by dc amplifiers A21A1 and A21A2. Cosine potentiometer R220 resolves the airspeed signal into its horizontal component. It is a cosine wound resistor with its case on the outer roll gimbal and its wiper arm attached to the pendulum pitch gimbal. During horizontal flight, the output/input ratio of the cosine potentiometer is 1:1, or the output is the same as the input. As the aircraft pitch attitude deviates from horizontal, the output of the cosine potentiometer decreases by the cosine of the pitch angle. This horizontal component of airspeed is applied through a speed control calibration adjustment resistor to modulator A20. In the modulator, a 400-Hz signal is generated which has an amplitude proportional to the magnitude of the dc input signal. The ac output of the modulator is amplified through three stages of amplification—preamplifier A13, servo amplifier A19, and speed control output amplifier A11—before being applied to the pendulum spin motor control winding. The pendulum spin motor is a 2-phase motor with its fixed phase winding powered by 115 volts, phase A. The speed of the spin motor is proportional to the amplitude of the 0 to 27 volts ac applied to its control phase. Since the ampitude of the power applied to the control phase winding is proportional to the horizontal component of airspeed, the speed of the pendulum rotor is, in turn, proportional to the horizontal component of airspeed.

Feedback to maintain spin motor speed accurately is accomplished by a spin motor

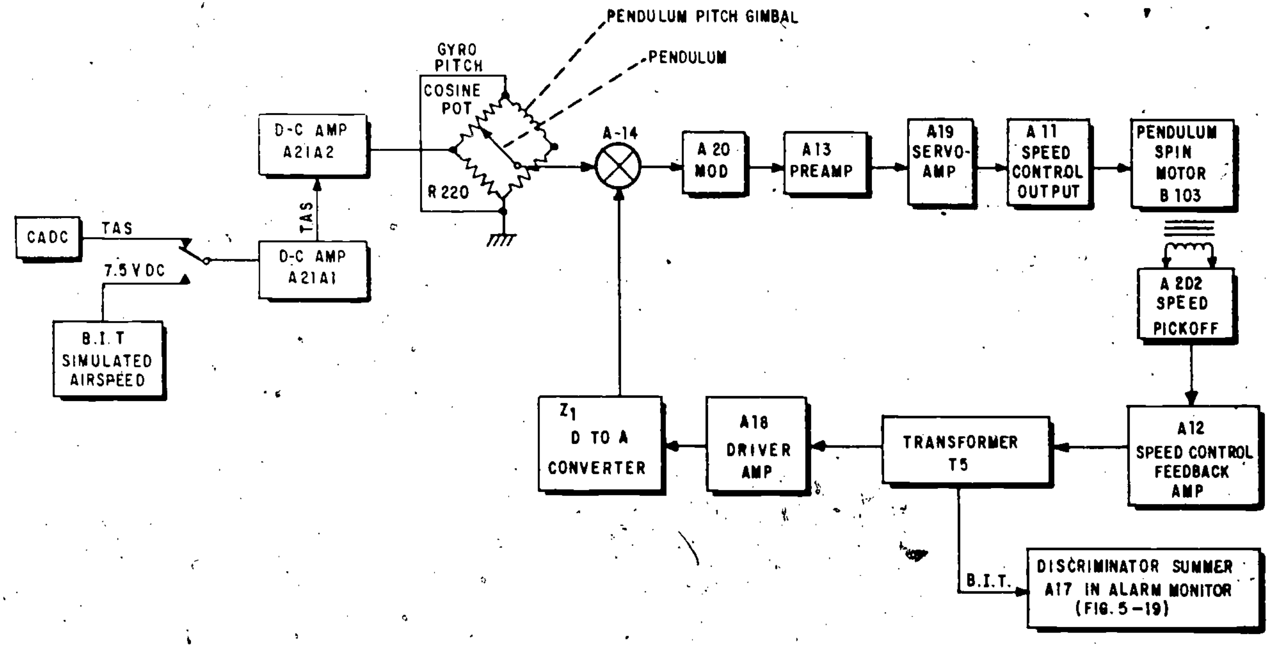

208.132

Figure 5-15.—Spin motor speed control block diagram.

speed pickoff, conversion circuitry, and signal mixing just ahead of the modulator. Speed pickoff A202 is a winding placed close to the rim of the spin motor. As the spin motor spins, slots in its rim interrupt the induced field of the speed pickoff. These interruptions generate a pulse train in the speed pickoff. The pulse repetition rate is proportional to the speed of the spin motor. The pulses are amplified by speed control feedback preamplifier A12. Driver A18 differentiates the pulses into positive and negative spikes. The time constant of the driver is sufficiently fast so that the highest possible pulse rate will not cause limiting of the spikes; therefore, regardless of pulse rate, all spikes contain the same amount of power. The digital to analog converter, Z1, operates basically as a pulse counter, generating a dc voltage of a magnitude directly proportional to the pulse rate. This dc feedback signal is the opposite polarity as the airspeed dc command signal. When the two mix at the input to modulator A20, the resultant signal keeps the spin motor at the command speed. The command control is fed through a speed control calibration adjustment resistor which sets the ratio of the command signal to the feedback signal so that spin motor speed control is accurate for various combinations of attitude and airspeed. It is adjusted at 50 percent airspeed (750 knots) for 50 percent rotor speed (approximately 3,300 Hz).

A low speed cutoff circuit (not shown in figure 5-15) disables the speed control output amplifier, A11, below 75 knots. The dc signal representing the horizontal component of airspeed is applied to the relay driver. Below 75 knots, 28 volts dc is applied to the low speed cutoff relay. When the low speed cutoff relay energizes, one set of contacts removes the 28-volt dc B+ power from speed control output amplifier A11, while another set of contacts removes the power from the spin motor fixed phase winding.

Erection

The erection system operates in three modes to erect the vertical gyro in the sensor—initial erection, precise erection to pendulum vertical, and emergency operation. To meet the operating requirements of these modes, two independent erection systems are utilized—electrolytic erection and pendulum erection.

The electrolytic erection system is utilized for initial erection and emergency operation. It senses vertical with electrolytic switches and uses its own pitch and roll torquers to erect the vertical gyro. Each torquer is a 2-phase wound motor segment which uses the appropriate gimbal as its armature. Each electrolytic switch operates in a phase shifting network with two capacitors. Tilt of the gimbal unbalances the resistance of the electrolytic switch which shifts the phase of one leg of the network to lead and the other leg to lag, energizing the torquer in the appropriate direction for correction.

For initial erection, the electrolytic erection system utilizes a sequence of power application to erect the vertical gyro with a minimum of nutation during acceleration of the gyro rotor to operating speed. When the rotor has reached operating speed and the vertical gyro is erect, the electrolytic erection system is disabled and the pendulum erection system is activated.

After the initial 60 seconds, the pendulum erection system takes over erection to reference the vertical gyro to the pendulum. If in this mode the vertical gyro drifts from vertical in roll, synchro control transmitter B102 generates a comparable error signal (fig. 5-16) which is amplified by roll driver A6 and roll output amplifier A5. Motor generator MG410 is activated by the error signal and drives the outer roll gimbal so that it tracks the vertical gyro roll gimbal. Torquing of the outer roll gimbal displaces the pendulum pickoff, A201A and B, from null. The primary of pendulum pickoff A201B is connected to the outer roll gimbal through the pendulum pitch gimbal, so that it is displaced from the null position (under the secondary of pendulum pickoff A201A) when the outer roll gimbal moves. The primary is excited by phase A and a quadrature voltage, phase A-90°. The phase A is used as the pitch erection channel reference, while the phase A-90° voltage is the roll channel reference. The pendulum pickoff is limited to 2° of deflection from null by the pendulum housing. Error signals from the pendulum pickoff are amplified by erection amplifier A16A1 and applied to both pendulum torquers on the vertical gyro

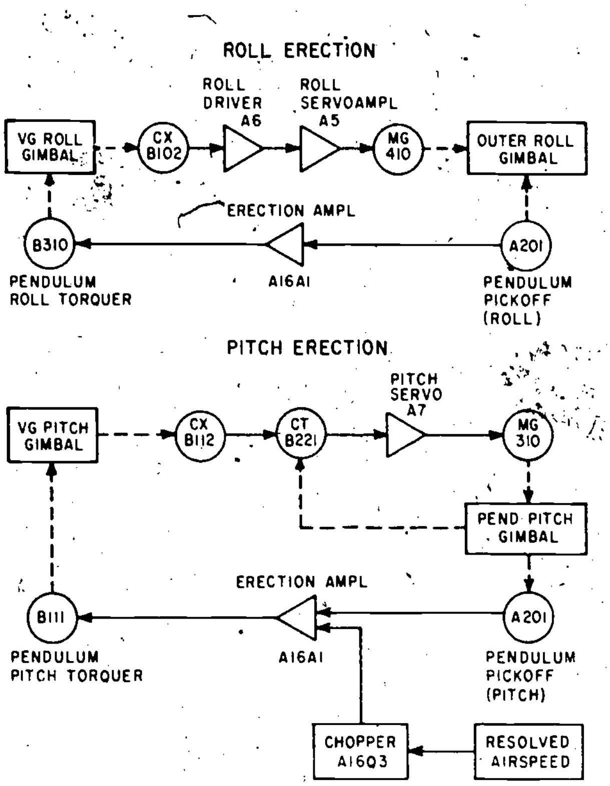

208.133

Figure 5-16.—Pendulum erection block diagram.

gimbals. Because pendulum pitch torquer B111 and pendulum roll torquer B310 on the vertical gyro gimbals are referenced the same as the pendulum pickoff, phase discrimination occurs at the torquers, and only the appropriate torquer is activated by the error signal. When the pendulum pickoff is deflected in roll, phase A-90° error signal activates pendulum roll torquer B310 to precess the vertical gyro roll gimbal until the vertical gyro is once again vertical with respect to the pendulum. When verticality is achieved, all error signals reduce to null.

If the vertical gyro drifts in pitch, synchro control transmitter B112 on the vertical gyro pitch gimbal transmits this new angle to synchro control transformer B221 on the pendulum pitch gimbal. B221 develops an error signal which activates motor generator MG310 through pitch servoamplifier A7. MG310 drives the pendulum pitch gimbal so it tracks the vertical gyro pitch gimbal. Movement of the pendulum pitch gimbal displaces pendulum pickoff A201 in pitch. The phase A pitch error signal generated by the displaced pendulum pickoff activates pendulum pitch torquer B111 on the vertical gyro gimbal through erection amplifier A16A1. The vertical gyro pitch gimbal is precessed by B111 until it erects the vertical gyro to pendulum vertical, and the error signals reduce to null. Vertical gyro verticality errors which are other than directly along the pitch or roll axes are resolved by the gimbaling into orthogonal (perpendicular) components, and proportional corrections are made by the pitch and roll erection channels.

The vertical gyro is continuously corrected for earth profile errors by an airspeed input applied to erection amplifier A16A1 (fig. 5-16). The horizontal component of airspeed is applied to chopper A16Q3 to convert its dc magnitude into a comparable ac amplitude. The chopper is referenced to phase A so that the earth profile correction will operate only the pendulum pitch torquer. The phase of this signal is such that the vertical gyro pitch gimbal is always driven in the dive direction, and it is attenuated to the level where the vertical gyro pitch gimbal makes just the right correction for the speed at which the aircraft is following the curvature of the earth.

The verticality error signals from pendulum pickoff A201 are interrupted anytime the vertical gyro roll or pitch gimbals exceed an angle of 40° from their normal position. This erection cutout places the vertical gyro into free gyro operation to avoid excessive gimbaling errors which develop in the erection system at large displacement angles. The cams and switches for erection cutout are located on the vertical gyro gimbals.

In the event the reference set should develop a malfunction, the system automatically switches to electrolytic erection. An external ON-OFF switch in the cockpit is provided to apply a ground to erection relay A1K3. This disables the pendulum erection system and reactivates the electrolytic erection system if this mode is desired. When this switching takes place, the electrolytic erection system operates on its normal erection rate of 1.5° per minute.

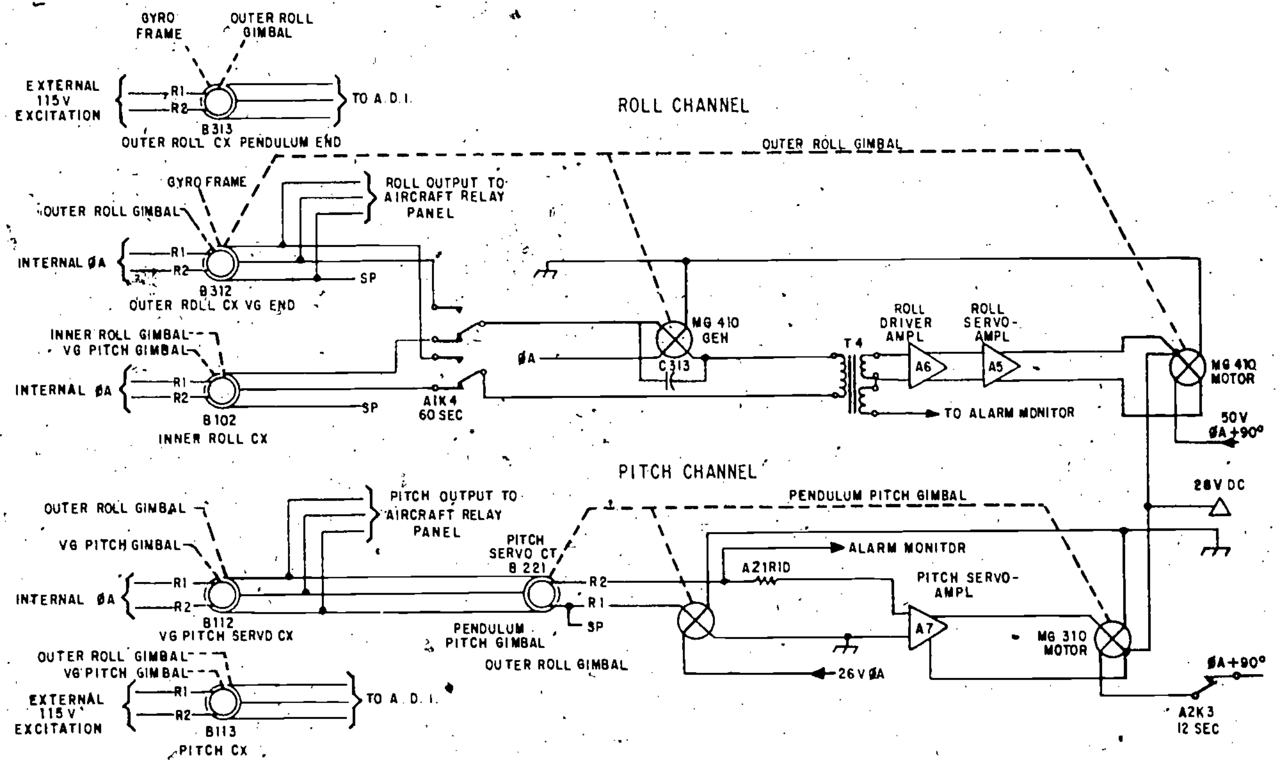

208.134

Figure 5-17.—Pitch and roll signal flow.

Roll and Pitch Signal Channels

The reference set provides two roll and two pitch output signals. (See fig. 5-17.) The roll outputs come from two synchro transmitters, B312 and B313, mounted between the ends of the outer roll gimbal and the frame of the sensor. The pitch outputs come from two synchro transmitters, B112 and B113, mounted between the vertical gyro pitch gimbal and the outer roll gimbal.

Since the outer roll gimbal is servoed to the vertical gyro roll gimbal, it accurately tracks the vertical gyro roll gimbal, and the roll output synchros are in turn referenced to the vertical gyro roll gimbal. This servo loop is interrupted during the initial 60 seconds of erection to level the outer roll gimbal to the frame and allow the vertical gyro to erect. The vertical gyro roll gimbal is referenced to the pendulum by the erection circuit described previously. An output to the alarm monitor is taken from transformer T4 to provide a warning of roll servo failure.

The pitch output synchros are referenced to the vertical gyro pitch gimbal which, in turn, is referenced to the pendulum by synchro control transformer B221 on the pendulum pitch gimbal. The pitch servo is disabled during the initial 12 seconds of the erection cycle to allow the VG motor to accelerate and the gimbals to stabilize before using synchro control transformer B221 to provide a warning of pitch servo failure.

Flightpath Angle

Accurate flightpath angle (FPA) information is vital to some modes of operation of the aircraft. The flightpath angle is the angle of climb or dive of the aircraft velocity vector. The flightpath angle computer channel uses airspeed, barometric altitude, and vertical accleration

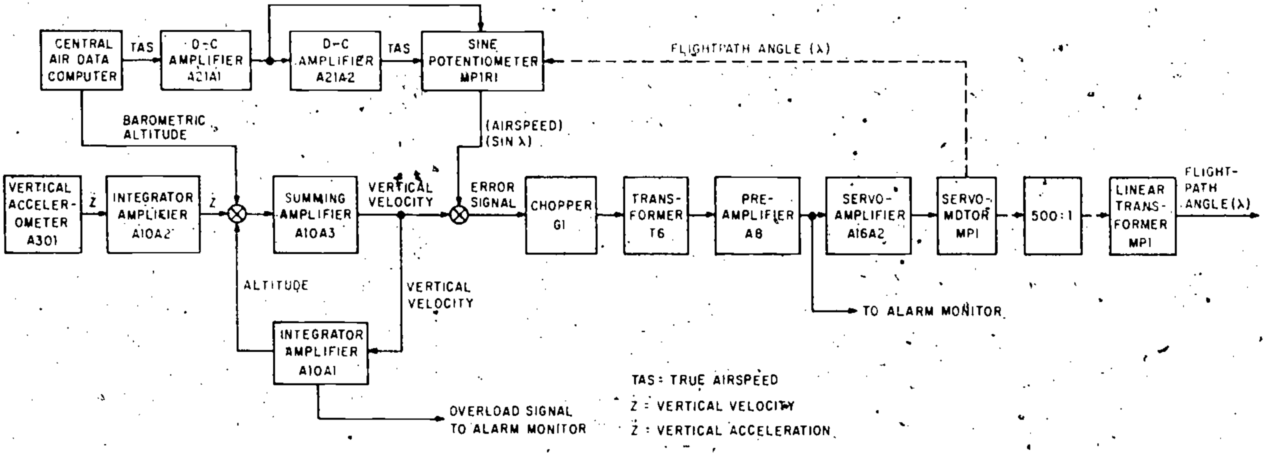

208.135

Figure 5-18.—Flightpath angle computer block diagram.

inputs to develop an ac output proportional to the flightpath angle. In the computer, the airspeed along the velocity vector is compared to vertical velocity to derive flightpath angle. (See fig. 5-18.)

The analytical expression for the derivation of flightpath angle is

$$\gamma = \sin^{-1} \frac{\dot{Z}}{Va}$$

where

γ = Flightpath angle

$\sin^{-1}$ = angle whose sine is

$\dot{Z}$ = vertical velocity

Va = airspeed

The computer accomplishes its solution by transposing terms and solving Va sin $\gamma = \dot{Z}$. When airspeed times the sine of the flightpath angle equals vertical velocity, the servo loop is positioned at the flightpath angle.

A dc airspeed signal is obtained from the airspeed potentiometer in the central air data computer. This input is amplified by dc amplifier A21A1. The output of the dc amplifier is applied to one end of sine potentiometer MP1R1 and the input of dc amplifier A21A2. DC amplifier A21A2 reverses the polarity of its input and applies its output to the other end of the sine potentiometer. Therefore, the sine potentiometer has the opposite polarity of the airspeed signal applied to its two ends. The center of the sine potentiometer is grounded, and the wiper arm moves in a 90° arc in each direction from the grounded center tap. It is a sine wound potentiometer so that the output is the full airspeed voltage at 90° and decreases by the sine of the flightpath angle to 0 volts at 0° The wiper arm of the sine potentiometer is driven by the flightpath angle servomotor. The dc output from the wiper arm of the sine potentiometer is applied to chopper G1 which converts the dc signal to ac for use by the flightpath angle servo.

The vertical accelerometer is utilized for determination of the vertical velocity signal. Vertical acceleration is applied to integrator amplifier A10A2 through a voltage divider network (A10R15, A10R16, and A10R17). The output of A10A2 is vertical velocity which is scaled and fed to summing amplifier A10A3. The output of A10A3 is utilized in the computation of flightpath angle.

Barometric altitude is used in the vertical velocity circuit for long term stabilization during constant vertical velocity conditions as follows: The output of summing amplifier A10A3 is fed to integrator amplifier A10A1 which produces

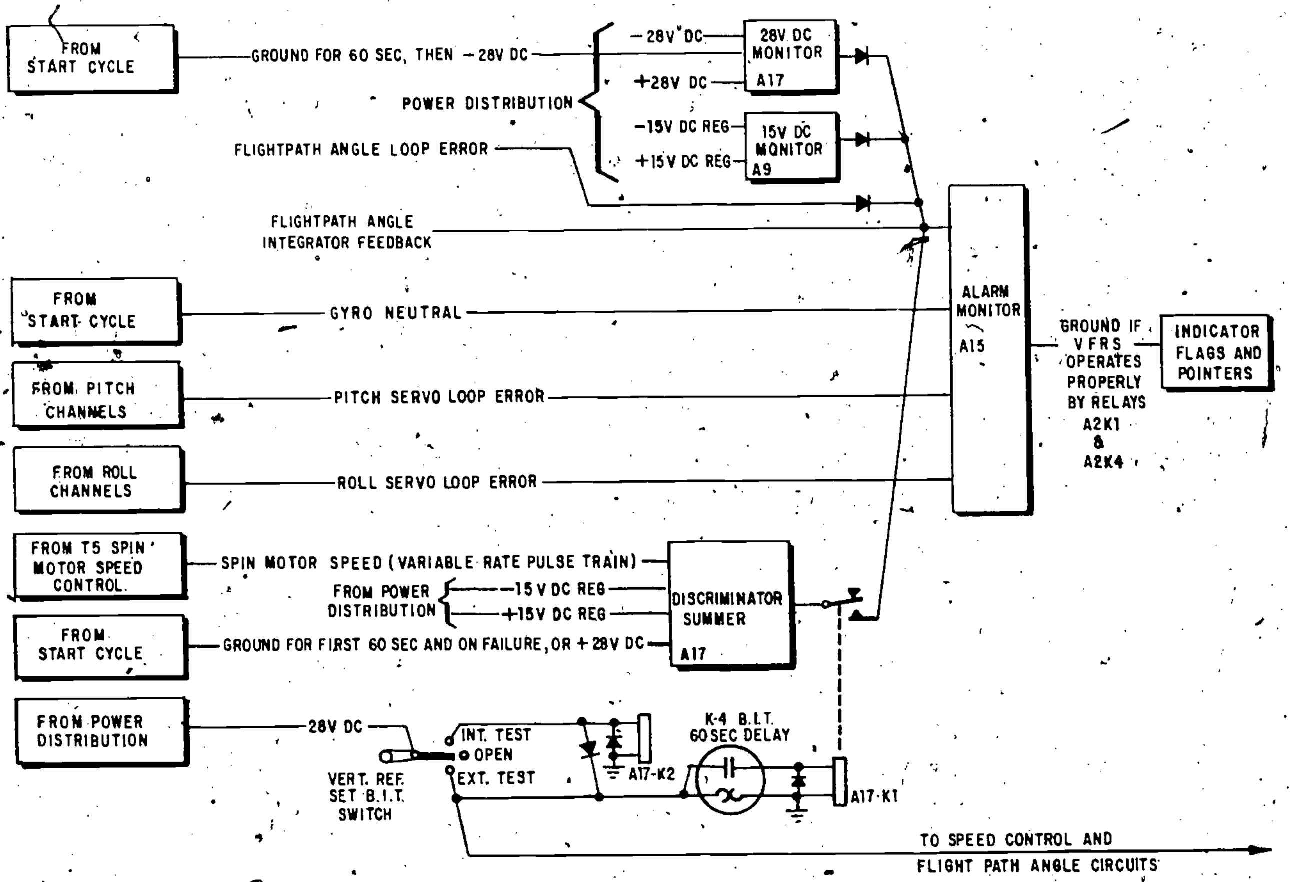

208.136

Figure 5-19.—Alarm monitor block diagram.

computed altitude. This signal is then compared with barometric altitude signal at amplifier A10A3. The difference between these signals is then used to correct the vertical velocity output of A10A3.

The computed vertical component of airspeed signal from the sine potentiometer and the vertical velocity signal from summing amplifier A10A3 are compared at chopper G1. These two signals are connected series opposing so that current flows in the primary of transformer T6 only when there is a difference in their values. Inequality of the two signals develops an ac error signal in the secondary of T6, which is applied to the gain control circuit for limiting of amplitude changes. Preamplifier A8 and servoamplifier A16A2 provide power to the flightpath angle motor which drives the sine potentiometer until its output equals the output from the summing amplifier. At this time, the sine potentiometer is positioned at the flightpath angle. Since the linear transformer is also driven by the flightpath angle motor it develops an ac output whose amplitude and phase are indicative of the flightpath angle.

Alarm Monitor

The alarm monitor (fig. 5-19) provides warning in the event of a failure which would produce unreliable indications from the vertical reference set. It monitors 3-phase ac power, 28-volt dc power, positive and negative 28-volt derived dc, positive and negative 15-volt regulated dc, pitch servo channel, roll servo channel, and flightpath angle computer. If any of these functions fails, the alarm monitor will cause warning flags in the indicator to appear and the PRIM GYRO OFF light to illuminate. The system will then automatically switch to electrolytic erection.

In normal operation, the alarm monitor circuit holds relay A2K1 energized. Relay A2K1 in turn holds relay A2K4 energized. These two relays control power OFF and displacement warning flags in the attitude indicator, the PRIM GYRO OFF light on the right-hand console caution lights panel, and the erection relay. If there is a failure in the reference set, the alarm monitor allows these two relays to deenergize. This causes the flags to appear in the attitude indicator, the warning light to come on, and the system to revert to electrolytic erection.

The alarm monitor monitors the neutral leg of the 3-phase power applied to vertical gyro rotor B101. If any leg of the 3-phase power fails, current flows in the neutral line. This current flow is sensed by the alarm monitor which operates the warning flags and light.

In the event of failure of the aircraft 28-volts dc, the power relay, K3, will deenergize, interrupting the 3-phase ac power. Interruption of the ac power will cause failure of the positive and negative regulated 28 volts dc and the positive and negative regulated 15 volts dc. The regulated 28 volts dc is monitored by 28-volt dc monitor A17. If the positive regulated 28 volts dc drops below 15 volts, or the negative regulated 28 volts dc drops below 22 volts, the alarm monitor operates. The positive and negative regulated 15 volts dc is monitored by 15-volt dc monitor A9. If the regulated 15 volts dc drops below 9 volts, the alarm monitor operates. For the initial 60 seconds of operation of the reference set, the negative regulated 28 volts dc is returned to ground through resistors located in 28-volt dc monitor A17, and the contact of the 60-second thermal start cycle relay. The alarm monitor sees this condition as a failure of the negative 28 volts dc and keeps the warning flags in view for the initial 60 seconds.

The pitch signal channel is monitored at pitch servo CT B221. If the pitch channel malfunctions, the error signal in B221 will become excessive. The alarm monitor operates when the error builds up to 10°. The roll signal channel is monitored in a similar manner at transformer T4. The alarm monitor operates when the roll error reaches 3°.

Flightpath angle computer failures are detected at either of two points—at feedback integrator A10A1 or at preamplifier A8. If the vertical velocity computer malfunctions, feedback integrator A10A1 will draw excessive current, causing the alarm monitor to operate. Excessive servo loop errors will cause excessive output from preamplifier A8. This condition also causes the alarm monitor to operate.

Built-In Test Circuit

The built-in-test (BIT) circuit works through the alarm monitor (fig. 5-19) to indicate whether the pendulum spin motor speed control circuits are operating correctly (fig. 5-15). If the speed control is not operating correctly, the alarm monitor will cause the warning flags and light to indicate failure when the BIT check is performed. If the speed control is operating correctly when the BIT check is performed, the warning flags will wave and the light will flash on and off at a steady rate.

When the cockpit mounted BIT switch is placed in INTERNAL position, relay A17K2 is energized and thermal relay K4 begins to heat. Relay A17K2 substitutes the 7.5-volt dc signal for the airspeed input signal to the speed control circuit. This simulated airspeed signal will drive the pendulum spin motor at 50 percent speed (half speed produces approximately 3,300 pulses per second). Thermal relay K4 has a 60-second delay to allow the circuits to stabilize prior to testing. At 60 seconds, the contacts of K4 close and relay A17K1 energizes connecting the BIT circuit to the alarm monitor. Pendulum spin motor speed is monitored by the BIT circuits at transformer T5. This variable rate pulse train is monitored by BIT discriminator/summer circuitry A17. BIT sense level potentiometers on the A17 card adjust the high and low speed limits. If the spin motor speed is too high or too low, diodes conduct and develop an output for the alarm monitor.

When the spin motor speed is within the specified limits, there is no output from the BIT discriminator/summer. With no output from the discriminator/summer, the alarm monitor deenergizes relay A2K1. When relay A2K1

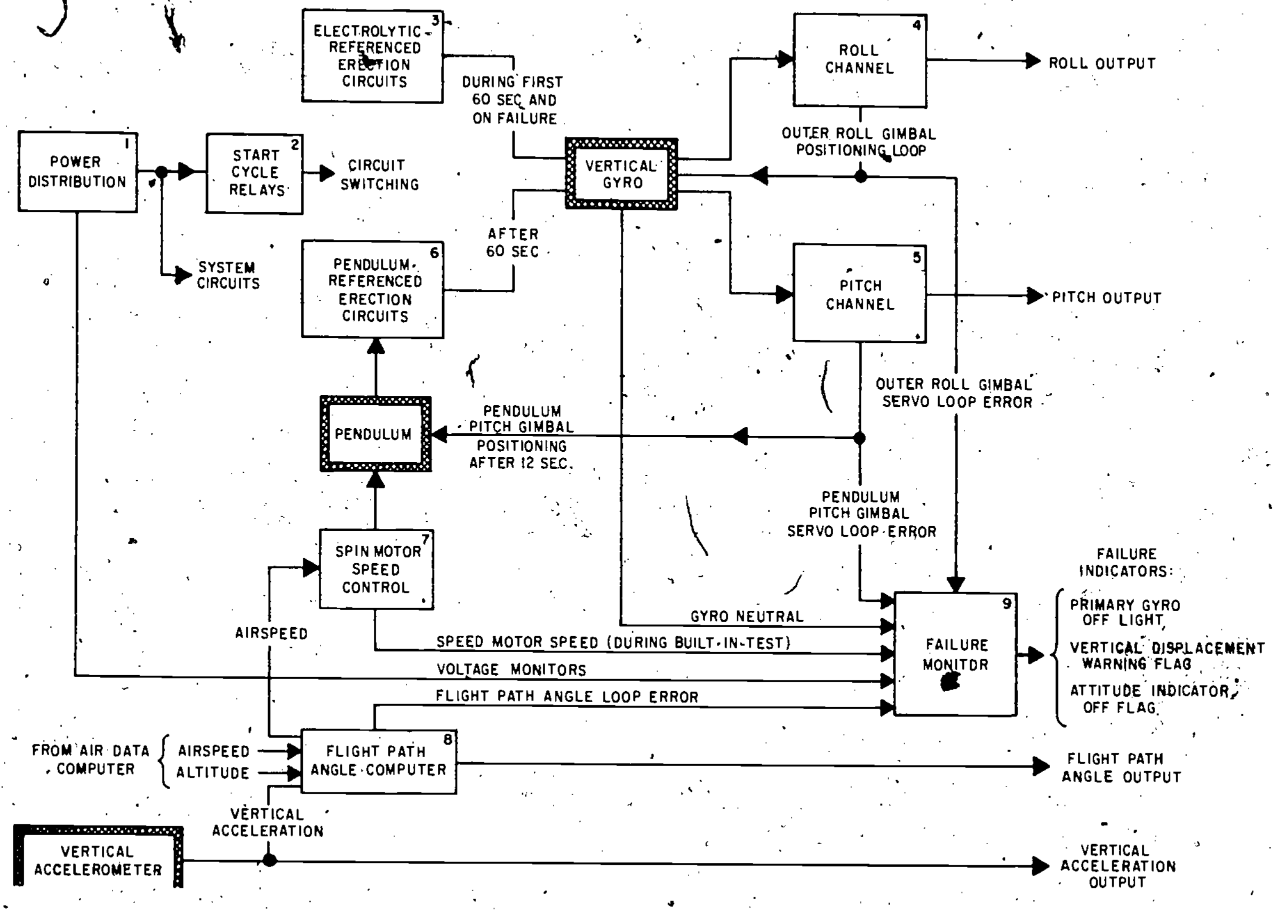

Figure 5-20.—VFRS block diagram.

deenergizes, it provides a discharge path for a capacitor in the discriminator/summer. The capacitor discharges until it reaches a level which permits the alarm monitor to reenergize relay A2K1. This circuit continues to cycle, waving the flags and flashing the warning light to indicate that the pendulum spin motor speed control is operating correctly. If the spin motor is operating too fast or too slow, the output of the BIT discriminator/summer causes the alarm monitor to keep relay A2K1 deenergized, keep flags in view, and keep the warning light lit.

The BIT check is the only test performed on the VFRS at the organizational level of maintenance. If the VFRS fails the BIT check, the reference set, sensor, and computer must be removed as a unit for repair and calibration at an intermediate level maintenance activity.

The "EXTERNAL" position on the BIT switch is used for applying an external signal for calibration purposes, which is also performed at the intermediate, or higher, level of maintenance.

Power Distribution

The reference set uses 115-volt, 400-Hz, 3-phase wye-connected power and 28-volt dc power. This power enters the computer through the contacts of a power relay. Aircraft-supplied 28 volts dc holds the power relay energized when a ground is applied to the relay from an external ON-OFF control circuit.

The computer derives positive and negative 28 volts dc and positive and negative regulated 15 volts dc from the 3-phase aircraft power. These regulated voltages are used in circuits where power variations would degrade performance. The unregulated 28-volt dc aircraft power is used primarily where considerable current is required, such as for energizing relays and for amplifier output stages.

When power is initially applied to the reference set, a 12-second thermal delay relay is activated by 115 volts, phase C, and a 60-second thermal delay relay is activated by 115 volts, phase B. As the normally closed contacts of these relays open, relays in the erection circuit are operated to produce the results described earlier.

SUMMARY OF VFRS OPERATION

Figure 5-20 provides a simplified functional block diagram of the VFRS. The functions of the major circuits—outlined by a single line—are as follows:

1. The power distribution circuits receive aircraft power, modify that power to system requirements, and distribute the power to the system.

2. The start cycle relay circuits control power application to the vertical gyro and to the gyro erection circuits to ensure proper erection.

3. The electrolytic-controlled erection circuits initially erect the gyro to a spin-axis vertical position.

4. The roll channel provides the system roll output signal, and incorporates a servo loop to position the outer roll gimbal.

5. The pitch channel provides the system pitch output signal, and incorporates a servo loop to position the pendulum pitch gimbal.

6. The pendulum-referenced erection circuits assume control of gyro erection approximately 60 seconds after power application to the system, and maintain the spin axis vertical.

7. The spin motor speed control circuits control pendulum spin motor speed to counteract the effects of acceleration on the pendulum.

8. The flightpath angle computer circuits receive airspeed, altitude, and vertical acceleration signals and compute the flightpath angle. Airspeed is also applied to the spin motor speed control circuits.

9. The failure monitor monitors various parameters throughout the system and activates indicators in the event of failure.

CHAPTER 6

INERTIAL NAVIGATION

The introduction of inertial navigation systems into naval aircraft has created a whole new set of problems in operation, maintenance, and deck handling. This chapter discusses the fundamental concepts of a semianalytic inertial navigation system, and other types of inertial systems are discussed at the end of this chapter. A block diagram description of a typical inertial navigation system is included in *Aviation Electrician's Mate 3 & 2*, NAVEDTRA 10348 (Series).

FUNDAMENTALS OF INERTIAL NAVIGATION

Much of the material that follows in this chapter is reprinted by permission from *Fundamentals of Inertial Navigation*, published by Litton Systems, Inc., copyright 1969.

Navigation may be defined as the process by which one directs a vehicle from one point to another. Basically, navigation can be divided into two categories: (1) position fixing and (2) dead reckoning. In the first category, position is determined by your position relative to positions of known objects such as stars and landmarks. The most common example of this is celestial navigation. Loran is another example of navigation by periodic position fixes. The second category, dead reckoning, is the process of estimating your position from the following known information:

1. Previously known position.
2. Course.
3. Speed.
4. Time elapsed.

Examples of this category are the Doppler radar and the inertial navigators.

All navigation systems, except inertial, rely on some bit of information external to the vehicle to solve its navigational problem. In this respect the inertial navigator stands alone. It is completely self-contained within the vehicle. It is independent of its operating environment, such as wind, visibility, or aircraft attitude. It does not radiate RF energy; therefore, it is impervious to countermeasures. It does not depend on ground transmission or any other outside source to determine its instantaneous position. The inertial navigator simple makes use of the physical laws of motion that Newton described three centuries ago.

BASIC PRINCIPLES

Perhaps the most important part of Newtonian physics on which the concepts of inertial navigation systems are based is described by Newton's First Law of motion: "Every body continues in its state of rest, or of uniform motion in a straight line, unless it is compelled to change that state by forces impressed on it."

The full meaning of Newton's First Law is not easily visualized in the earth's reference frame, for Newton's laws apply in an inertial reference system. An inertial reference system may be defined as a nonrotating coordinate frame, either stationary or moving linearly at a uniform speed, in which there are no inherent forces, such as gravity.

A simple test of whether one is in a true inertial system can be made by having the observer release an object and observe its motion. If the object is released without imparting any acceleration to it, the object will remain in its position relative to the observer; if the object is thrown, it will continue on an undeviating path at a constant speed. Such a system can exist only in empty space; far from any mass, for all masses contain gravitational forces. A reference system attached to the earth can closely approximate an inertial system when the gravitational force on a body is balanced out by a second force. For example, an object sliding on a flat frictionless plane on the surface of the earth would move in a NEARLY straight line with a NEARLY constant speed, as seen by an observer in the earth's coordinate system.

NOTE: The word NEARLY is emphasized because the object will deviate slightly from its straight-line motion because of the earth's rotation about its axis.

Newton's Second Law of motion shares importance with his First Law in the inertial navigator, for it is Newton's Second Law that the inertial navigator is based on. Newton's Second Law of motion states: "Acceleration is proportional to the resultant force and is in the same direction as this force." Thus, the Second Law is written

$$F = ma$$

where

F = force
m = mass
a = acceleration

Now, the physical quantity in the foregoing equation in which the inertial navigator is interested is acceleration; because from acceleration, velocity and displacement can be derived. For example, consider this fact: Before an object can change its state of rest or state of motion, it must first experience an acceleration; and since acceleration is a change in velocity and velocity is a change in position, then acceleration is a change in the change of position. However, before any change can have meaning, it must include the unit time. Therefore, a change per unit of time is defined as a rate-of-change. Thus, a rate-of-change of displacement is velocity; a rate-of-change of velocity is acceleration; and a rate-of-change of a rate-of-change of displacement is acceleration. Written mathematically,

$$\frac{ds}{dt} = v$$

$$\frac{d^2s}{dt^2} = \frac{dv}{dt} = a$$

where ds/dt is defined as the rate-of-change of displacement "s" with respect to time and d^2s/dt^2 is the rate-of-change of the rate-of-change of displacement "s" with respect to time.

The equations given above are from calculus and are called derivatives. The act or process of taking derivatives is called differentiation. In calculus, the act or process that reverses the operation of differentiation is called integration. Differentiation is the process of investigating or comparing how one physical property varies with respect to another; integration, the reverse of differentiation, is the process of summing all rate-of-changes that occur within the limits being investigated.

The inertial navigator is not a differentiating device; it is an integrating device. However, before integration can be done, a rate-of-change must first be supplied. Thus, the inertial navigator, when stripped to its barest essentials, is a detector and an integrator. It first detects changes of motion, and then it integrates these changes of motion with time to arrive at velocity, and again with time to arrive at displacement.

Fundamentals of Integration

Since the inertial navigator is partly an integrating device, a simplified explanation and an applied example are given. First, consider the integrals of acceleration and velocity given as

$$\int a\,dt = v$$
$$\int v\,dt = s$$
$$\iint a\,dt\,dt = s$$

where

s = displacement
v = velocity

a = acceleration
$\int$ = integration symbol
dt = time differential

The integral equations show that when acceleration is integrated with respect to time, the result is velocity; when velocity is integrated with respect to time, the result is displacement. Also, when acceleration is integrated twice (double integral) with respect to time, the result is displacement.

Recall from elementary physics that acceleration whose units are ft/sec^2, multiplied by time in seconds is velocity in ft/sec. Also, that velocity (ft/sec) multiplied by time (sec) is displacement (ft). The integration of acceleration, for example, is the mathematical process of summing all minute acceleration-time increments over a given time period, the result of which is velocity over the same time period. The same process done on velocity gives displacement or distance traveled over the same time period.

An example of how a simple single-axis inertial navigator works is illustrated as follows: A man has an acceleration detecting device, an integrating device, and a displacement readout device strapped to his back. The acceleration detecting device is capable of detection only along one line and is oriented in the backpack so that it detects accelerations when the man is moving forward or backward, but not sideways or up and down (bobbing). Figure 6-1 is a block diagram of such a device.

If a man starts at reference point A, noting the reading on the displacement readout device at that point, and walks to point B, then stops, the readout device will indicate the new position. The distance traveled directly from point A to point B added to the reference value noted at point A will be indicated on the displacement indicator. The man returns to point A by walking backwards so as not to disorient his simple inertial device. At point A his readout device indicates the value that was chosen as a reference, which is the displacement at point B minus the distance traveled directly from point B to point A.

Figure 6-2(A) is a graph of the detected acceleration; (B) is the velocity curve obtained by integrating the acceleration curve shown in (A); and (C) is the displacement curve obtained by integrating the velocity curve shown in (B). All three curves are plotted as a function of time.

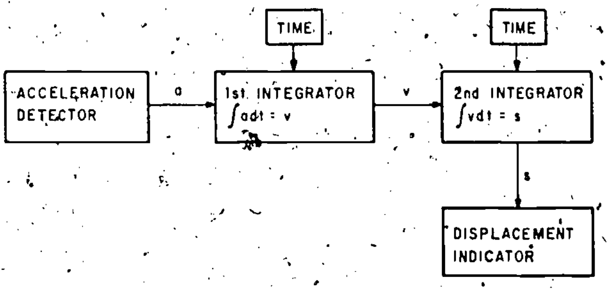

208.161

Figure 6-1.—Simple single-axis inertial navigator block diagram.

The acceleration curve (fig. 6-2(A)) begins at time t_0 as the man begins his walk from point A in curve (C). The acceleration at time t_0 has a value of a_1 and it remains at that value until time t_1, where the man ceases to accelerate; therefore, acceleration goes to zero. At this point, a steady velocity is reached. The man continues walking at a constant velocity until time t_2 where he begins to stop. The acceleration detector detects an acceleration equal in value to a_1, but its direction is opposite. This acceleration is constant from time t_2 to time t_3, going to zero at time t_3. The man is now stationary and standing at his destination—point B.

Now, look at the velocity curve for the time interval t_0 to t_3, which is the result obtained when acceleration is integrated over the same interval—it is the output of the first integrator from t_0 to t_3. During the interval t_0 to t_1, velocity is changing in an increasing or positive direction. This means that an acceleration is taking place and is positive. Velocity is constant during time interval t_1 to t_2, which means that acceleration is zero. At time t_2, velocity begins to decrease, which means that an acceleration is again taking place. In this case the acceleration is negative. At time t_3, both acceleration and velocity are zero.

Since the inertial navigator's purpose is to keep track of position and not total distance

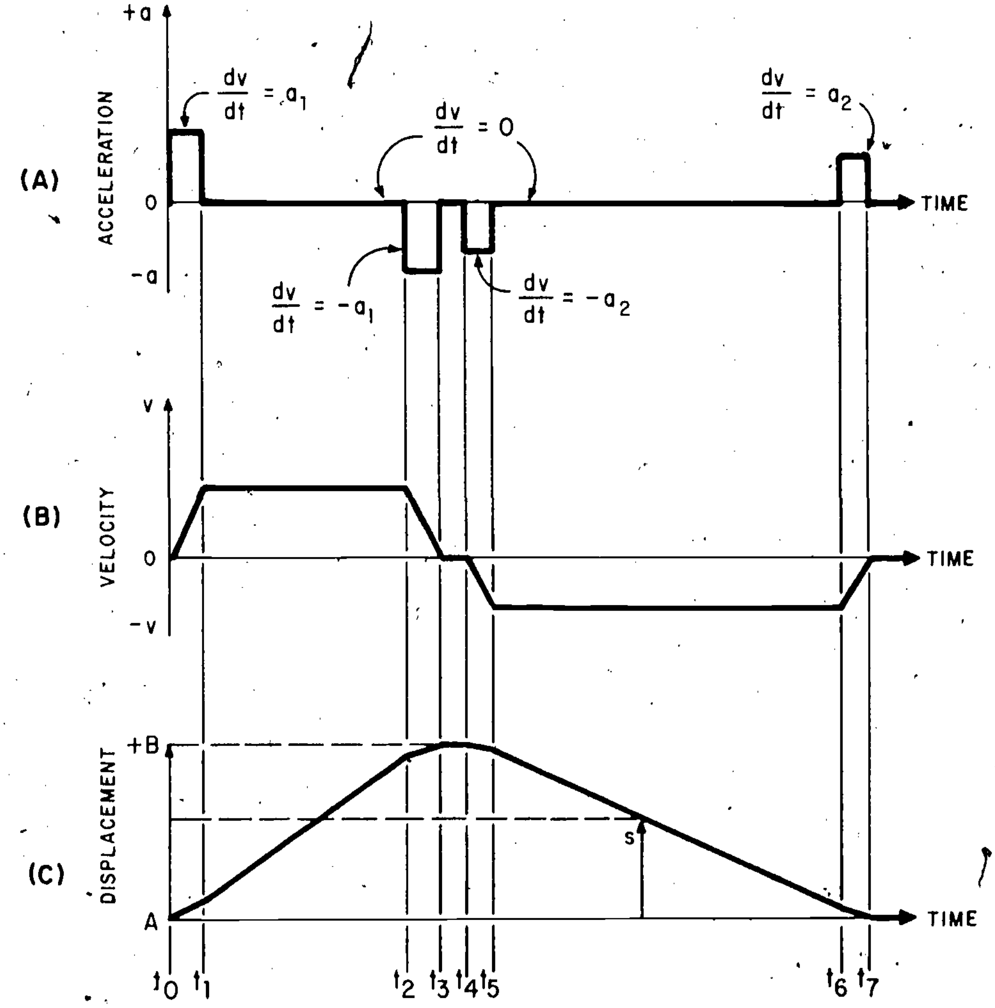

208.162

Figure 6-2.—Integration of acceleration and velocity. (A) Acceleration; (B) velocity; (C) displacement.

traveled, it integrates all values of acceleration (positive and negative) detected over the time interval. Therefore, it is the net value of acceleration in which the inertial navigator is interested. For instance, in the time interval t_0 to t_3, all accelerations that occur over the time interval are summed, which gives a net value at time t_3. In this case, integration of acceleration (curve (A)) is the process of summing the area bounded by the acceleration curve and the time axis, where the area above the time axis is positive and the area below the time axis is negative. Since the area above the time axis is equal to the area below the time axis, the net value of acceleration for the interval t_0 to t_3 is zero. The integral of acceleration for the interval t_0 t_3 is therefore zero, which means that the velocity at time t_3 is equal to the velocity at time t_0, which in this case is zero.

Now, integrating velocity from time t_0 to t_3 (which is the job of the second integrator) gives B units of displacement on the displacement axis at time t_3. The displacement readout device changes continuously as long as the second integrator produces an output. The second integrator ceases to produce an output when the first integrator (velocity) ceases to produce an output. The velocity integrator continues to produce an output until it receives an acceleration which balances out the initial acceleration, thus producing a net acceleration of zero. The readout device stops at the point where the net acceleration is zero. Until this condition is reached, the readout device indicates continuous change in displacement.

The return trip is described as follows: The man pauses at point B for time interval t_3 to t_4, then begins walking backwards to point A at time t_4. The acceleration detector detects an acceleration $-a_2$, which is negative and slightly less than the previous acceleration, $-a_1$. At time t_5 a steady velocity is reached and acceleration goes to zero at this point. Note also that velocity is now negative since the direction of travel is reversed. Since the magnitude of acceleration, $-a_2$, is less than that of a_1, maximum velocity on the return trip is less and, therefore, the time required to return to point A is greater. This is shown by time interval t_4 to t_7 greater than time interval t_0 to t_3. When the man is nearly at point A, he begins to stop, which is at time t_6, producing an acceleration a_2 as detected by the acceleration detector. He comes to a full stop at time t_7 where his detector detects zero acceleration. Since the net acceleration over the interval is again zero, the output of the first integrator (velocity) is zero; the output of the second integrator (displacement) stops with the displacement readout device indicating the reference value that was originally noted at point A.

The simple inertial navigator just described will detect and compute all changes in displacement PROVIDED the acceleration detector (accelerometer) retains its straight-line orientation and all motion is along a straight line passing through the reference or initial point.

With this simple inertial navigating device, the man is restricted to navigation along a straight line, and on the return trip he must walk backwards (unless he unstraps the device from his back and sets it down, and then turns around and straps it to his chest, then proceeds walking forward).

Two-Axis Inertial Navigation System

Suppose, for example, that the earth is flat. If so, position can be determined by the use of a system of coordinate axes. This system of coordinates is defined as two sets of parallel lines (x and y) in which one set of lines is perpendicular to the other set of lines, thus forming a grid network over the earth's surface.

Now, if two single-axis inertial navigating devices are used, position on the plane (flat surface) can be determined by simply maintaining proper orientation of each accelerometer's sensitive axis relative to the coordinate system. That is, one accelerometer is mounted on a platform so that its sensitive axis lies along the x-axis, and the other accelerometer is mounted on the same platform so that its sensitive axis lies along the y-axis, thus maintaining their axes mutually perpendicular. The accelerometers will then sense any rate of

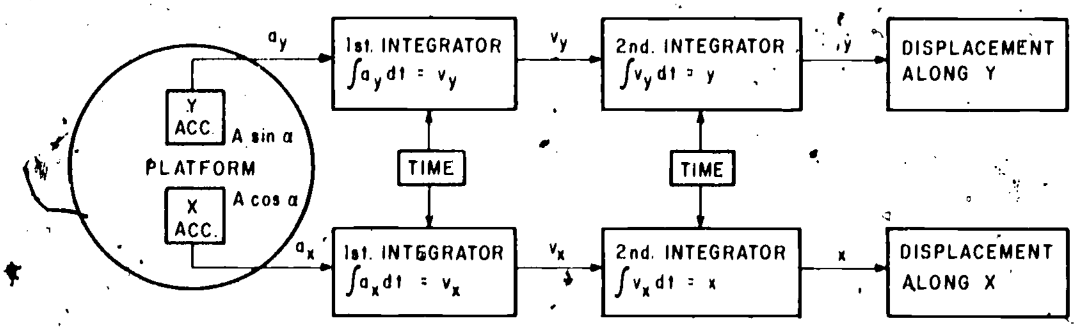

208.163

Figure 6-3.—Two-axis inertial navigation system, block diagram.

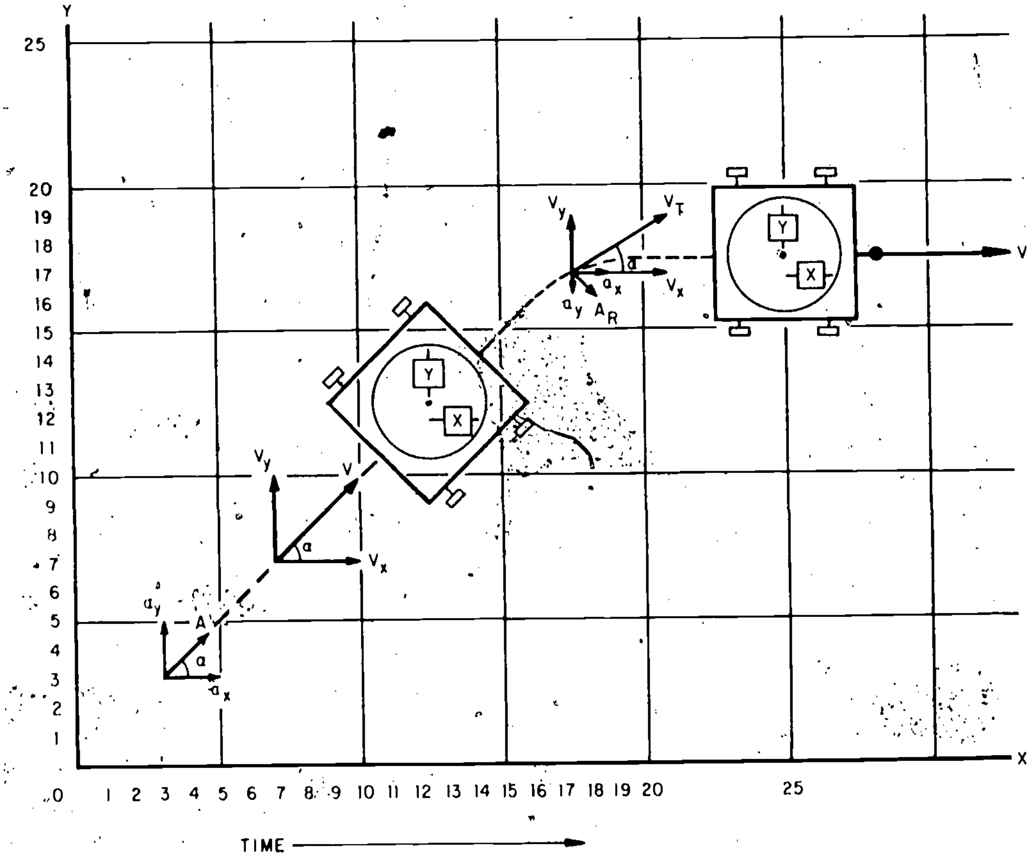

208.164

Figure 6-4.—Two-axis inertial platform in a plane coordinate system.

change of velocity along the coordinate axes. Figure 6-3 is a block diagram of a simplified two-axes inertial navigation system.

Figure 6-4 is an illustration of the inertial platform mounted on a vehicle moving over a plane coordinate system. Note that the platform and accelerometers remain oriented with the coordinate axes regardless of the heading of the vehicle. Displacement of the vehicle over the grid system is represented by the vehicle's ground track, which can be located by the x, y coordinates at any given time. The x-displacement is plotted left/right, and the y-displacement is plotted top/bottom on the page. Time is referenced to the x-axis.

Figure 6-5 is an illustration of a typical set of acceleration and velocity curves obtained from the inertial navigation system shown in figure 6-4.

Referring to figures 6-4 and 6-5, the operation of the plane inertial navigation system is explained as follows: The vehicle is aligned (initialized) on the coordinate system with a displacement of 3 on the x and y axes; that is, both x and y displacement indicators are set to read 3. At time t_3, the vehicle experiences an acceleration, A, in a direction of 45° from the x-axis. The accelerometers detect only that portion of the acceleration that lies along its sensitive axis; that is, the x-accelerometer detects the component of acceleration along the x-axis, which is A cos α, and the y-accelerometer detects the component of A along the y-axis, which is A sin α. The vehicle continues in a direction of 45° until time t_{15}, at which time it

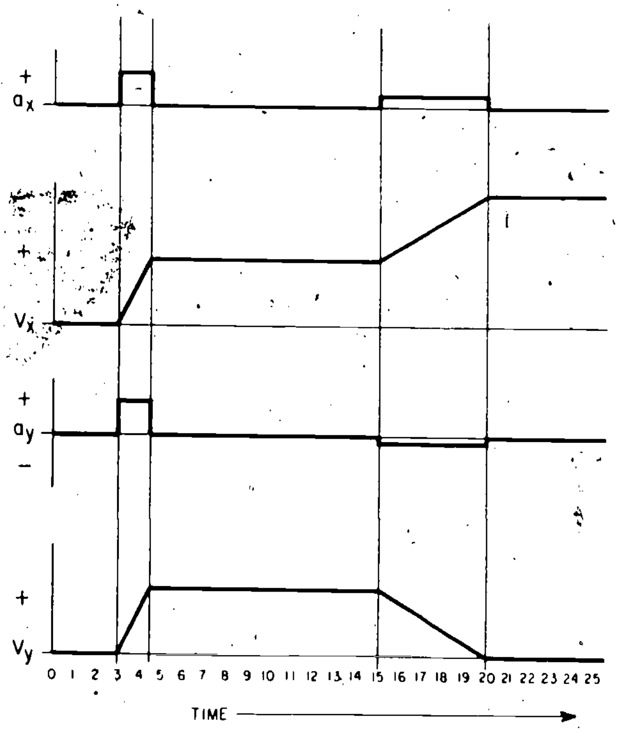

208.165

Figure 6-5.—Acceleration and velocity curves.

begins a turn to the right. Since the sine and cosine are equal to each other at the angle 45° (which means that the acceleration and velocity along the x-axis is equal to the acceleration and velocity along the y-axis), the displacements along x and y are equal at time t_{15}, which is $x = 15$ and $y = 15$.

At time t_{15}, the vehicle begins a turn to the right, completing the turn at time t_{20}. The new direction is parallel to the x-coordinate and perpendicular to the y-coordinate. Referring to figure 6-5, the time interval t_{15} to t_{20} shows that the x-accelerometer detects a positive acceleration while the y-accelerometer detects a negative acceleration. If the speed of the vehicle is maintained constant throughout the turn, the detected acceleration results from a velocity change which is due to a change in direction rather than a change in speed. This acceleration is called RADIAL (centripetal) acceleration, A_R, and is directed toward the center of the turn and perpendicular to tangential velocity, V_T, as shown at coordinates (17.5, 17) in figure 6-4. Had the speed not been constant during the turn, a tangential acceleration, A_T, would have occurred, which would be parallel to the tangential velocity (V_T) vector and normal (at a right angle) to the radial acceleration vector (A_R). Its direction would depend upon whether the speed was increasing or decreasing, positive or negative. Had the acceleration which resulted from the vehicle turning been due to both a change in speed and direction, the accelerometers would have detected the x and y components of the resultant of the two accelerations.

The important point to note about detecting acceleration of an accelerating body is that the accelerometers detect only the component of the resultant acceleration along their sensitive axis. The accelerometers have no way of telling whether the detected velocity change is due to a speed change or a direction change or both; nor does it matter what forces cause the velocity changes. The end result is the same provided the accelerometers maintain correspondence with the coordinate axes.

Referring to the acceleration and velocity curves in figure 6-5, the integration of the x-component of acceleration for the interval t_{15} to t_{20} shows an increase in the x-component of velocity and, therefore, a corresponding increase in displacement along the x-axis. Integration of the y-component of acceleration over the same interval shows that the velocity goes to zero at time t_{20}; therefore, the displacement along the y-axis ceases to change. Hence at time t_{15}, the displacement is (15, 15); at time t_{20}, the displacement is (20, 15); at time t_{25}, the displacement is (25, 15), etc.

The inertial navigation system just described will navigate very well on a flat surface; however, to navigate on the earth requires a highly complex inertial system. The earth of course is not flat, and it is not exactly round either. Its radius at the poles is less than its radius at the equator. It also spins about its polar axis and orbits around the sun. All of these things must be taken into account and corrected for (except the earth's motion in orbit around the sun) before navigation on the earth by inertial means can be realized. The earth's motion about the sun does not affect an earth inertial navigation system because this motion is translational which is shared equally by all points on the earth.

BASIC SYSTEM COMPONENTS

The inertial navigation system measures aircraft accelerations to continuously compute aircraft velocity and change in present position. These measurements are made by precision inertial devices mounted on a 3-axes stable element which is, in turn, part of a four-gimbal structure. The four-gimbal structure allows the stable element to move 360° of freedom about the three axes.

Two gyros provide gimbal stabilization signals to maintain the stable element level with the earth's surface and aligned to true north, and to measure aircraft pitch and roll attitude. The inertial characteristics of the gyroscopes employed in the system are used to define and maintain the reference axes for relatively long periods of time and with great accuracy. With a gyro stabilized platform as a reference, it is possible to accurately detect the desired components of motion in any direction using precision accelerometers, and analog or digital computers.

Accelerometers

The primary data source for this method of navigation is the accelerometer. Three accelerometers, mounted on the stable element between the gyros, provide output signals proportional to total accelerations experienced along the three axes of the stable element. The accelerations are computed to produce aircraft velocities and change in position.

An accelerometer consists of a pendulous mass which is free to rotate about a pivot axis in the instrument. Figure 6-6 shows one form of this device. It has an electrical pickoff which converts the rotation of the mass about the pivot axis to an output signal. An acceleration of the device to the right causes the pendulum to swing to the left, thereby providing an electrical pickoff signal which causes a torquer to restrain the pendulum. The pickoff signal is supplied to a high gain amplifier, and the output of the amplifier is connected to the torquer on the accelerometer. The operation of this feedback loop is such that when an acceleration is present, a voltage is sent to the torquer which holds the pickoff signal at a null under the influence of the measured acceleration. This voltage is proportional to the measured acceleration and provides the electrical output acceleration signal which is supplied to the computer.

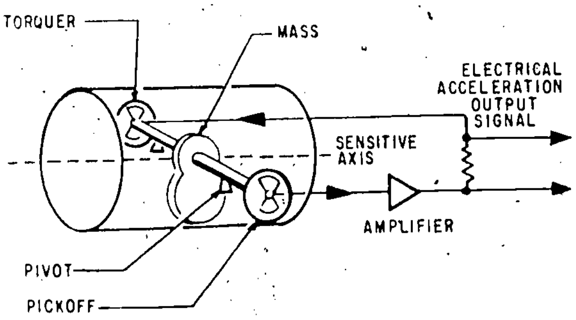

208.166

Figure 6-6.—Typical torque-balanced accelerometer.

The accelerometer cannot distinguish between the acceleration of the vehicle and gravitational acceleration. Therefore, if the accelerometer is tilted off level, as shown in figure 6-7(C), its output will include a component of gravitational acceleration as well as vehicle acceleration. To obtain the correct vehicle acceleration in the horizontal plane, it is necessary to hold the sensitive axis of the accelerometer normal to the gravitational field, as shown in figure 6-7(B).

If the accelerometer is mounted on a platform (stable element) in such a way that it is always held level, the accelerometer measures true aircraft acceleration in a horizontal direction, along the sensitive axis of the accelerometer. By mounting another level accelerometer perpendicular to the first one (x and y axes), the total true acceleration in a horizontal plane is determined for any movement in any direction.

Integrators

To convert the measured acceleration to aircraft position information, it is necessary to process the acceleration signals to produce

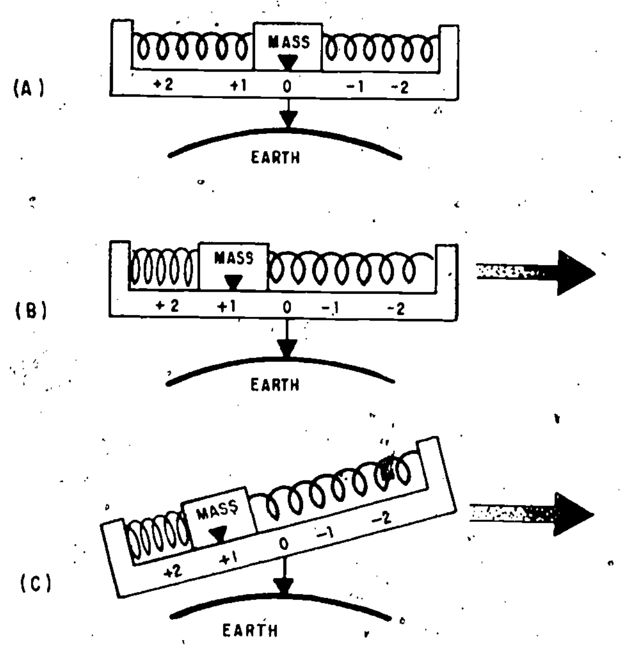

208.167
Figure 6-7.—Principle of accelerometer. (A) Accelerometer at null; (B) true acceleration; (C) spurious acceleration due to gravity.

velocity information, and then to process the velocity information to obtain distance traveled. An analog type integrator is shown in figure 6-8. It is an electromechanical device which receives an electrical input (acceleration or velocity) and produces a shaft speed proportional to the input. The shaft angle is the output of the integrator, and it is the mathematical integral of the input. If the input is acceleration, the output is velocity; if the input is velocity, the output is distance.

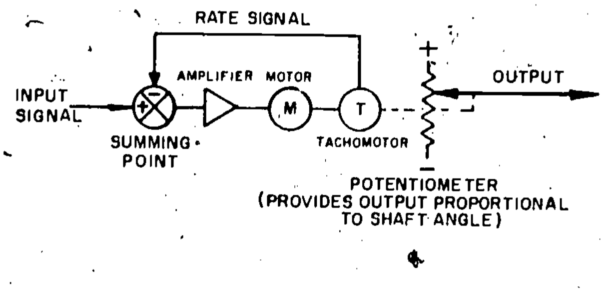

208.168
Figure 6-8.—Analog integrating device.

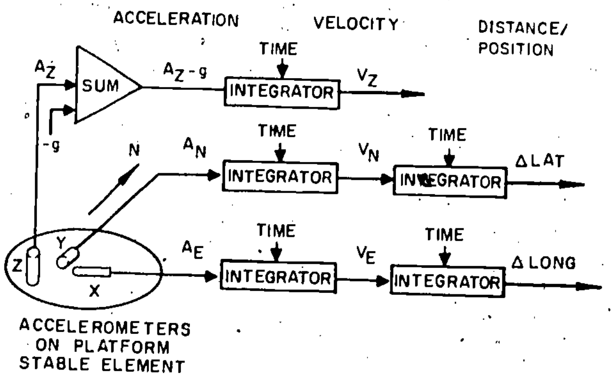

208.169
Figure 6-9.—Basic inertial navigation system.

If one of the horizontal accelerometers points north, the other one will always point east. By connecting the accelerometer outputs to integrators as shown in figure 6-9, distance traveled in the north-south and east-west directions can be determined. The importance of maintaining the proper accelerometer pointed north, and of maintaining both accelerometers horizontal to the earth's surface, is apparent. If the accelerometers tilt off level, gravitational components will be measured and navigation errors will result. A third accelerometer is sometimes mounted on the stable element in the vertical plane to determine vertical acceleration. The gravity component is subtracted from the output of the accelerometer by the computer. The resulting signal represents actual aircraft vertical acceleration. Vertical acceleration is supplied to an integrator in the attitude computer which computes vertical velocity.

Platform Stable Element

Proper orientation of the accelerometers is maintained by mounting them on a stable element together with gyroscopes, which are the sensing elements for controlling the orientation of the stable element. The stable element (fig. 6-10) is mounted on gimbals which isolate it from angular motions of the aircraft.

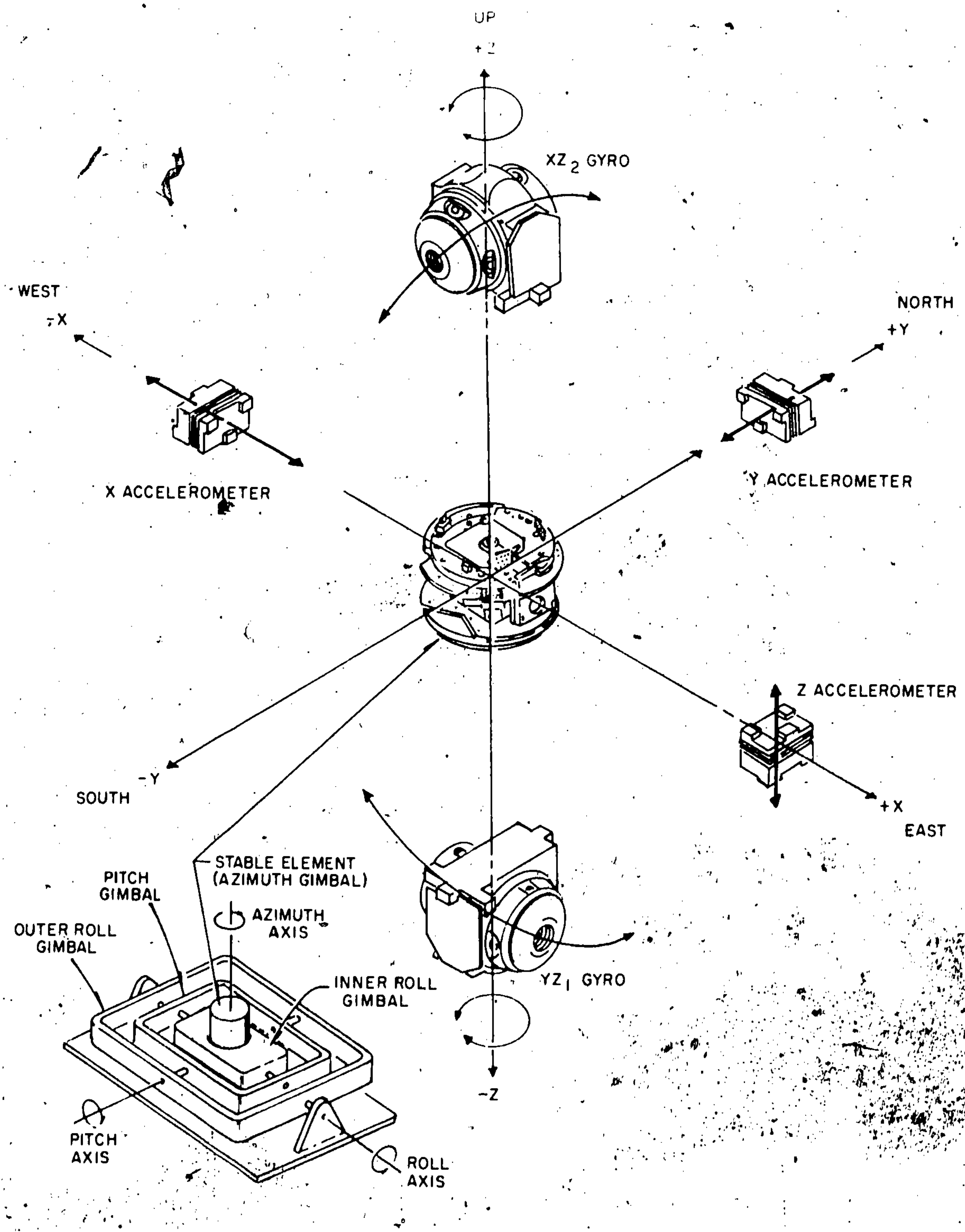

208.170

Figure 6-10.–Simplified platform stable element.

GYROSCOPES.–The stable element contains two identical floated, two-degree-of-freedom gyroscopes, mounted one on top of the other in a dumbbell configuration (fig. 6-10), with their spin axes horizontal and at right angles to each other. The wheels in these gyroscopes, which spin at high speed, resist any effort to change the orientation of their spin axes.

Figure 6-11 shows a two-degree-of-freedom gyro and a single-axis stable platform. The pickoffs on the gimbals within the gyro produce electrical signals if the gyro case is moved from its null position with respect to the gyro motor. With the gyros mounted on the stable element, any displacement of the stable element from the frame of reference will be sensed by the electrical pickoffs in the gyroscopes. The signals thus created are used to drive the platform gimbals to realign the stable element.

PLATFORM GIMBAL STRUCTURE.–Figure 6-10 illustrates the four-gimbal platform configuration actually used in inertial navigation systems. The stable element is mounted in the gimbal structure so that regardless of what maneuvers are made by the aircraft, it retains the original orientation, thus serving as a level mount for the accelerometers. An azimuth gimbal permits the aircraft to change heading without affecting the orientation of the stable element. A pitch gimbal removes the effect of aircraft pitch, and a roll gimbal eliminates the effects of roll. An extra roll gimbal is provided which prevents the occurrence of gimbal lock during certain aircraft maneuvers and makes the system truly all-attitude. Referring to figure 6-12, the inner roll gimbal is provided to prevent gimbal lock, which would cause the stable element to tumble. Gimbal lock occurs when two of the gimbal axes become aligned parallel to each other, causing the stable element to lose one of its degrees of freedom. When the aircraft exceeds 90° in pitch, the outer roll gimbal is rotated through 180°. The gimbals are oriented so that aircraft attitude and heading may be sensed by measuring angles between the gimbals. Synchros transmit this information to the attitude indicator and other systems in the aircraft.

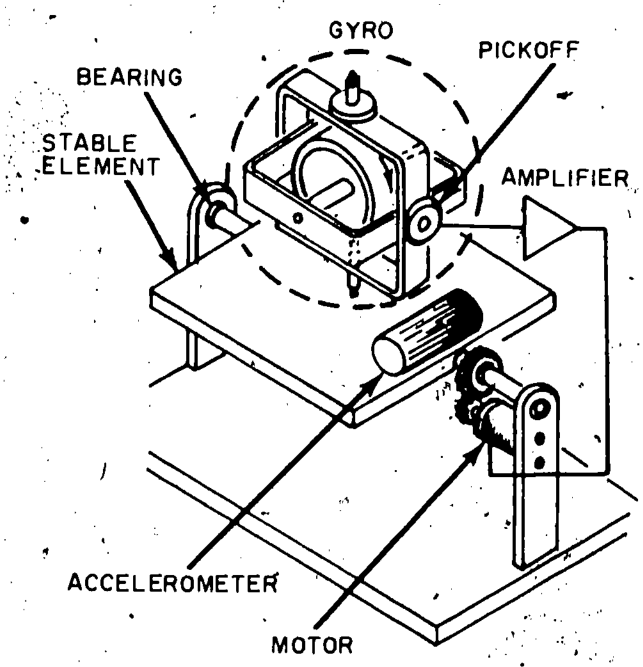

208.171
Figure 6-11.—Single-axis, gyrostabilized platform.

Platform Orientation.–Figure 6-13(A) illustrates the apparent rotation of a stabilized platform located at the equator. As shown, the platform will remain fixed with respect to inertial space, but it will appear to rotate with respect to the surface of the earth as the earth spins about its polar axis. This is undesirable from the point of view of navigation, since the accelerometers will not remain horizontal to the earth's surface, thus producing gravitational components of acceleration in the outputs of the accelerometers.

Consider also what happens to a stable element which is aligned properly at the beginning of a flight as the aircraft flies over the surface of the earth. If the aircraft flightpath is straight north from the equator to the north pole, as shown in figure 6-14(A), the aircraft "sees" a continuing pitch maneuver. At the pole, instead of the platform being level with the surface of the earth, it would now be tilted 90° off level.

Gyro Torquing Computations.–To overcome the problems that arise from platform

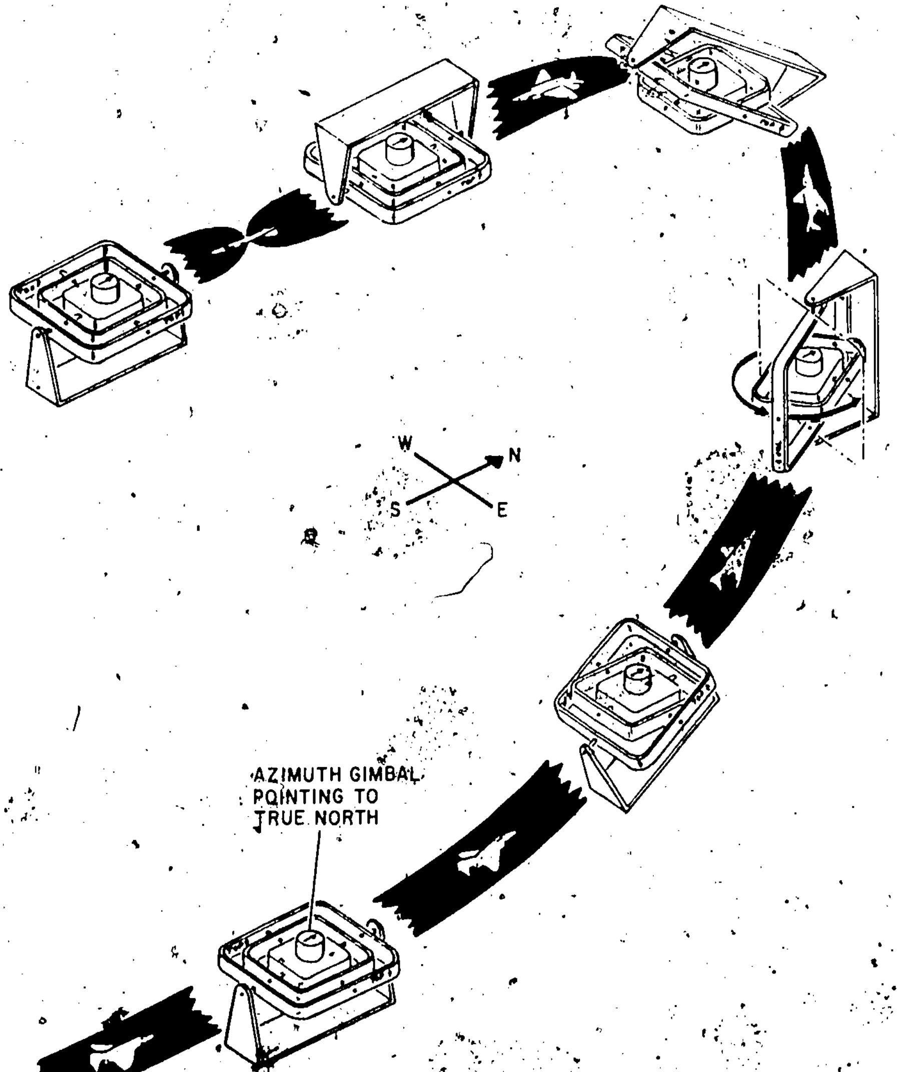

Figure 6-12.—Gimbal flipping action.

tilt, the gyroscopic principle of precession is used. By utilizing the gyroscopic principle of precession as the aircraft flies over the [illegible] earth, it is possible to apply a continuous [illegible] to the appropriate gyro axis, thereby [illegible] the gyros to maintain the stable element horizontal to the earth's surface and pointed [illegible] north. Operation of the platform with proper [illegible] earth rate and aircraft rate torquing correction is shown in figures 6-13(B) and 6-14(B).

An analog or a digital computer is used to develop the signals necessary to properly torque the gyros. The corrections for earth rate depend on the aircraft's position on the earth's surface. The analog corrections are derived from highly accurate potentiometers which produce trigonometric functions of aircraft position. The potentiometers are driven by the position integrator shafts. To maintain the stable element oriented to the north reference, torquing

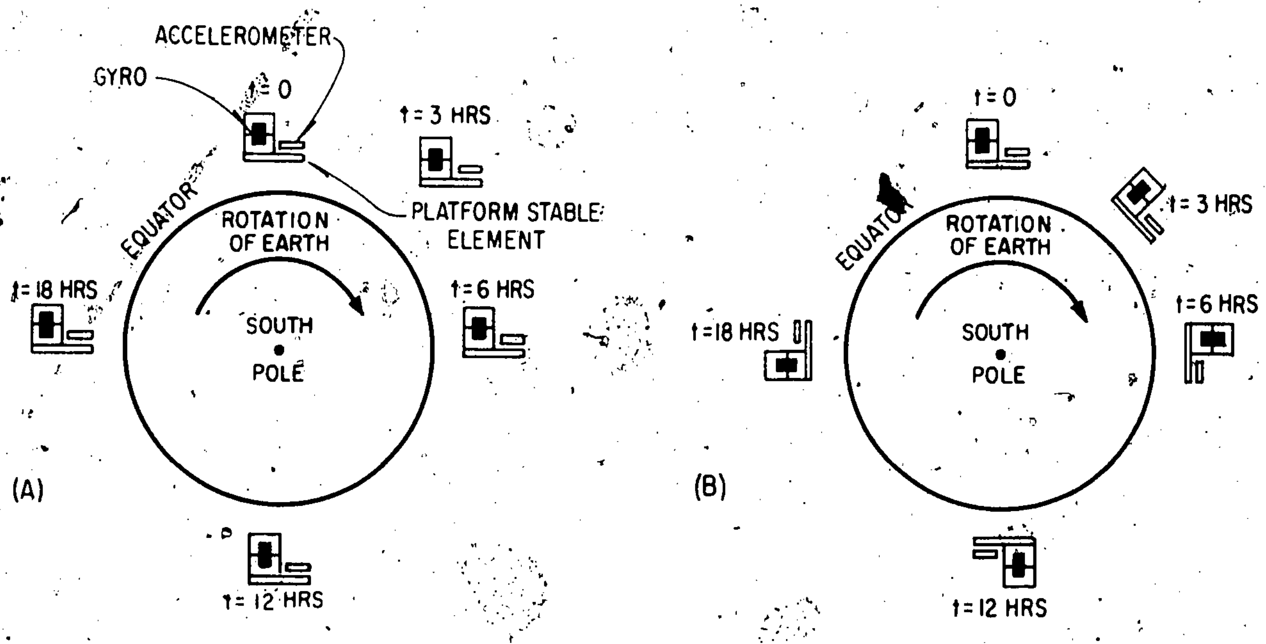

208.173

Figure 6-13.—Earth rate torquing. (A) Without gyro torquing; (B) with gyro torquing.

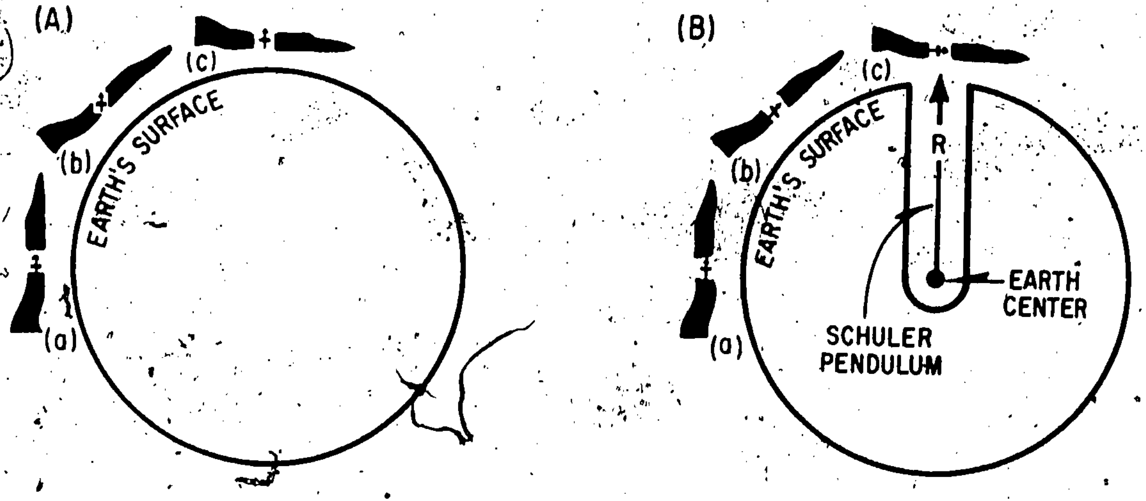

208.174

Figure 6-14.—Aircraft rate torquing. (A) Without gyro torquing; (B) with gyro torquing.

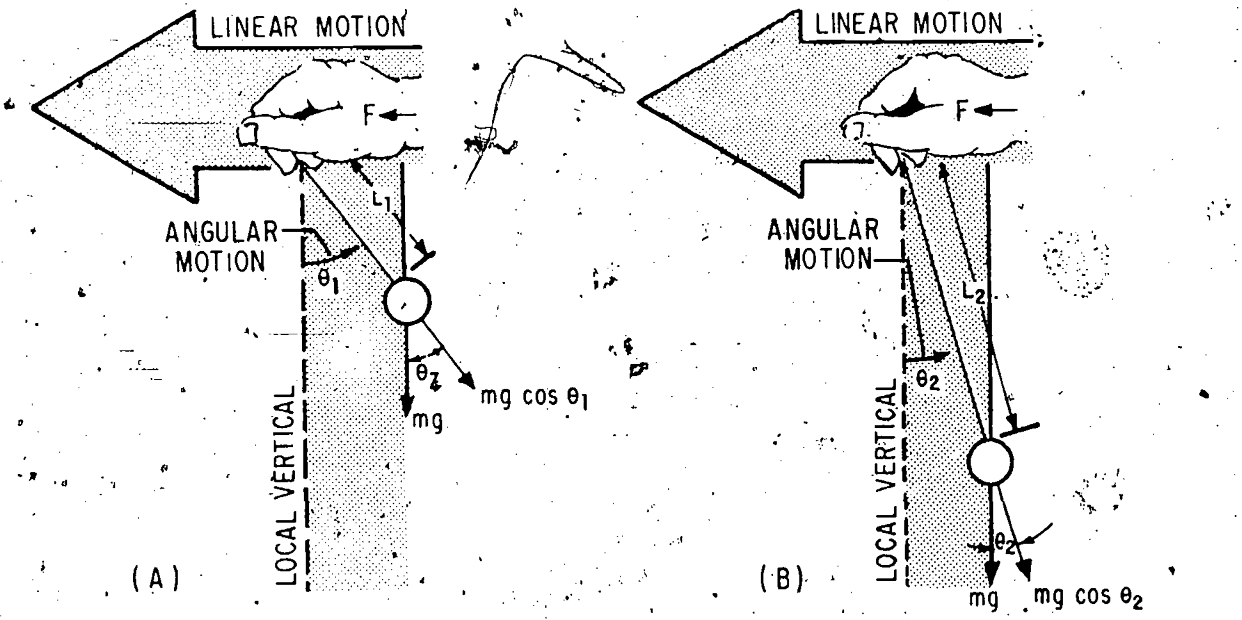

208.175

Figure 6-15.—Simple pendulum.

corrections are also applied to rotate the platform about the vertical axis to compensate for vehicle velocity.

Schuler Pendulum

A pendulum is any suspended mass, free to rotate about at least one axis, and its center of gravity is NOT on the axis of rotation. Therefore, any pivoted mass that is not perfectly balanced is, by definition, a pendulum. The inertial platform is a pendulous device and, therefore, behaves as all pendulums behave. They align to the dynamic vertical when at rest, with the pivot axis and the center of gravity both in line with the gravity vector and with the center of gravity on the bottom. Also, they tend to break into their natural period of oscillation whenever the aircraft is accelerated.

Pendulous oscillation is periodic angular motion having the gravity vector as its midpoint. Periodic motion around the local vertical produces obvious errors from an inertial platform since misalignment relative to the horizontal plane introduces gravity components on accelerometer inputs. The system will interpret gravity accelerations as horizontal acceleration of the aircraft. The Schuler pendulum is a specially constructed pendulum that does not possess the unwanted oscillatory motions of non-Schuler pendulums. It is a special case of both the simple and the compound pendulums, which is illustrated in the following discussion on simple and compound pendulums.

SIMPLE PENDULUM.—The simple pendulum consists of a small body suspended by a weightless string. The motion of the simple pendulum is both periodic and oscillatory. The period of the simple pendulum is given by the mathematical formula:

$$T = 2\pi\sqrt{\frac{L}{g}}$$

where

T = time of one oscillation in seconds
L = length of the string
g = local gravity

The above formula shows that the period of a simple pendulum is proportional to the square root of the length of the suspending string. The longer the string, the longer the period.

A property of the simple pendulum that is very useful in the construction of an inertial stable element is shown in figure 6-15. Two pendulums are suspended by strings of different lengths, and the point of suspension of each is accelerated horizontally by equal forces. The inertia of the "bob" resists the change in its state of motion, causing the "bob" to lag behind the point of suspension. This action produces an angular motion of the pendulum with respect to the local gravity vector. Figure 6-15 shows that the length of pendulum (B) is longer than pendulum (A), and that the angular motion of pendulum (B) is less than pendulum (A), for a corresponding linear motion of the suspension point. Therefore, the longer the suspending string, the less the angular motion of the pendulum for a given linear motion of the suspension point.

Now, consider what would happen if the suspending string were long enough to maintain the "bob" at the center of the earth and the suspension point were transported horizontally along the earth's surface (fig. 6-14(B)). Since the "bob" is hypothetically at the center of the earth, which is also the seat of the earth's gravity field, an acceleration of the point of suspension along the earth's surface would merely realign the suspending string with the new local gravity vector. Therefore, the angular motion of the pendulum with respect to the gravity vector for any horizontal acceleration of the suspension point is zero. This particular pendulum is called the "Schuler pendulum," which is illustrated in figure 6-14(B). It gets its name from the German engineer, Maximillian Schuler, who solved the problem of oscillating shipboard gyrocompasses in the early 1900's. Of course, Schuler could not use the simple pendulum itself to solve this oscillating problem, for that is obviously impossible. He used the principle of the simple pendulum to construct a pendulum that reacted like a simple pendulum whose length was equal to the radius of the earth, which is approximately 3,440 nautical miles long and has a period of oscillation of about 84.4 minutes. Since the period of oscillation of a pendulum is proportional to the square root of its length, any pendulum constructed to oscillate with a period of 84.4 minutes would have an equivalent length

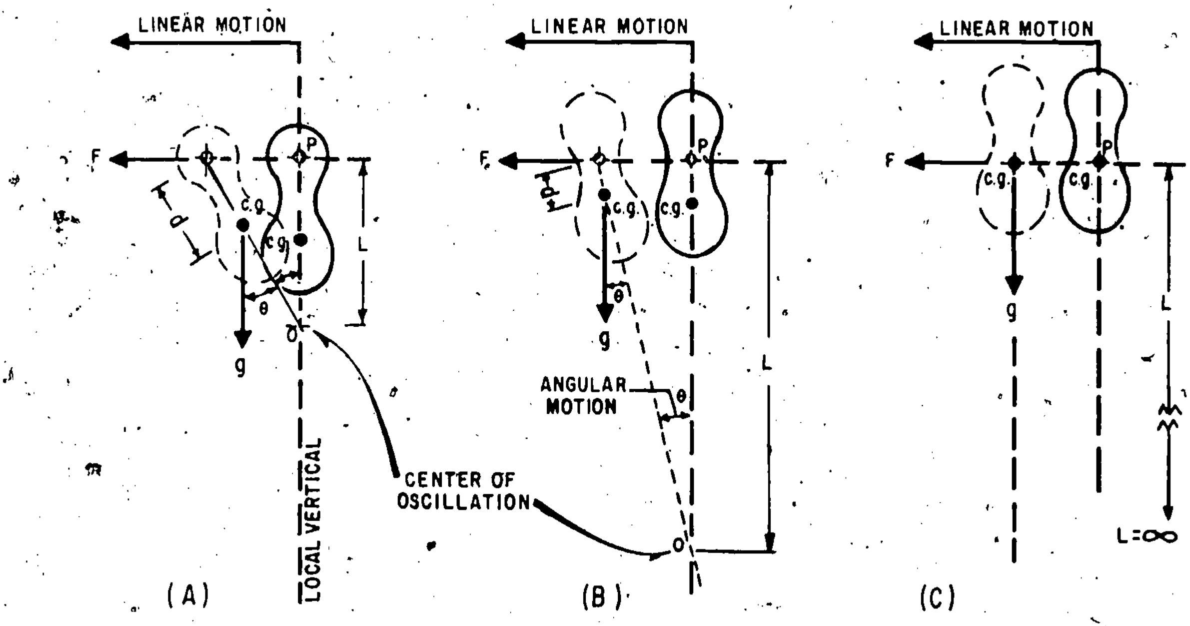

208.176

Figure 6-16.—Compound pendulum.

of approximately 3,440 nautical miles. Such a pendulum is the Schuler pendulum, which is a special case of the compound or "physical" pendulum. Figure 6-16 illustrates three examples of compound pendulums.

COMPOUND PENDULUM.—In figure 6-16(A), the pivot point is farthest away from the center of gravity, which is represented by distance d; in (B), the pivot point is closer to the center of gravity than in (A), but farther away than the one shown in (C) which is pivoted at the center of gravity.

The pivot point of each pendulum shown in figure 6-16 is given the same acceleration; therefore, each pendulum possesses the same linear motion at its pivot point. Yet, each pendulum has a different angular motion. Note that, as distance d decreases, the angular motion of the pendulum with respect to the local vertical (gravity vector) decreases and distance L increases. Distance L, is the distance from pivot point P to the center of oscillation, point O. Note also, that as the pivot point and the center of gravity come closer together, the equivalent length L of the pendulum becomes longer. Figure 6-16(C) shows the pendulum pivoted at the center of gravity, in which case there is no angular motion of the pendulum and the equivalent length L is infinite. Therefore, it is not a pendulum; it is a perfectly balanced mass which has an infinite period of oscillation. Thus, if it is possible to construct a pendulum of infinite equivalent length and period, it is also possible to construct one that has an equivalent length of 3,440 nautical miles. Such a pendulum would be pivoted at some distance d from the center of gravity which would be a distance greater than the one in figure 6-16(C), but less than the one in (B). When it is pivoted at a point where the period of oscillation is found to be 84.4 minutes, the equivalent length will be approximately 3,440 nautical miles long—hence, a Schuler pendulum.

The stable element is essentially a Schuler pendulum; however, it is not entirely mechanized by mechanical means, as was shown in the foregoing discussion on Schuler pendulums, for the earth's radius varies with latitude. The earth's radius is greater at the equator than it is at the poles. For this reason the stable element utilizes what is known as SCHULER TUNING. Schuler tuning is a process of torquing the platform to a position normal to the gravity vector by signals received from a computing loop as the stable element is transported over the earth. Schuler tuning is discussed in more detail later in this chapter.

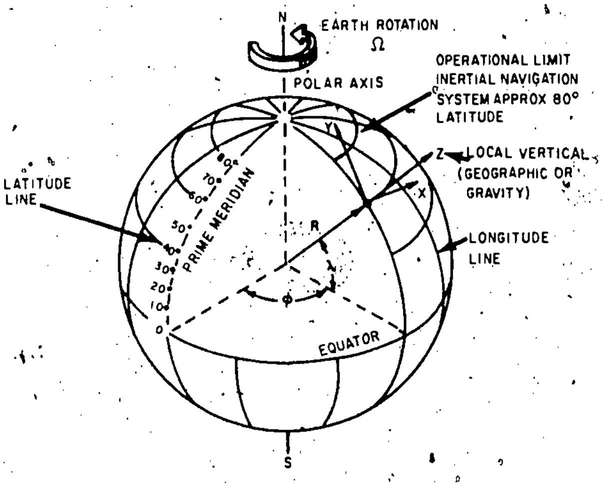

208.177

Figure 6-17.—Frame of reference.

Frame of Reference

The frame of reference about which the inertial navigation system measures acceleration, to define the instantaneous position of the aircraft, is the conventional latitude-longitude coordinate system (fig. 6-17). The local vertical, established and maintained by the inertial navigation system, is the gravity vertical and is coincident with the geographic vertical. The inertial navigation system is oriented to the true north reference by sensing the motion of the earth rotating on the polar axis. The frame of reference defined is horizontally aligned in a plane parallel to the surface of the earth and oriented to true north.

ESTABLISHING THE REFERENCE.—It may be seen from figures 6-10 and 6-17 that, by establishing the frame of reference, three perpendicular axes of the stable element will be aligned automatically to the horizontal coordinates of the latitude-longitude navigational system; that is, the stable element Z axis is aligned with the local vertical, the Y axis is aligned north-south and, therefore, coincident with lines of longitude, and the X axis is aligned east-west coincident with lines of latitude. In all calculations, X axis is positive east, Y axis is positive north, and Z axis is positive away from the center of the earth.

A pair of two-degree-of-freedom gyroscopes is used to establish and maintain the stable element to the frame of reference. Since a two-degree-of-freedom gyroscope has two sensitive axes, it is necessary that two such gyroscopes (fig. 6-10) be used, with the redundant upper gyroscope Z axis not utilized. They are physically mounted, on the stable element, so that their spin axes are exactly perpendicular in the horizontal plane. With this arrangement, alignment of the upper gyroscope spin axis north-south will automatically align the lower gyroscope spin axis east-west.

The stable element containing the gyroscopes is supported by the platform gimbal system, which is a series of interlocking rings that isolate the stable element from aircraft motion and disturbing forces. Thus, the gyroscopes control the stable element. However, if a free gyroscope is initially oriented so the spin axis aligns east-west in a horizontal plane, the gyro will precess in respect to the earth's surface due to the earth's rotation about its polar axis. In order to maintain an earth reference, the gyro must be torqued opposite and equal to the apparent precession. The upper (XZ_2) and lower (YZ_1) gyros are affected by the earth's rotation. Corrections for earth rotation are applied to the Y and Z_1 torquing coils (Z_1 and Z_2 are caged together and both will respond accordingly). The X torquing coil is not used for earth rate corrections.

To establish an earth frame of reference, the gyroscopes are controlled by continuously computed signals that introduce forces (torque) to cause their spin axes to precess in the desired direction. This torque is in the form of direct current signals applied to torquing coils mounted on the gyro float assembly. A magnetic field is created which aids or opposes the magnetic fields of the permanent magnets mounted on the end bells which effectively torque the gyro and cause the spin axis to precess to the desired orientation.

The first step in establishing a frame of reference is to level the stable element by aligning it to the local vertical (gravity vector). This is accomplished by torquing the XZ_1 and YZ_2 gyros to move the stable element until the X and Y accelerometers cease to sense any acceleration caused by gravity; that is, the outputs from the accelerometers provide the torquing signals for the gyros. During this time, and at all times while operating, computed earth rate torquing signals (ωy and ωz) are continuously applied to the Y and Z axes torquing coils of the lower gyro. The magnitude of these earth rate torquing signals is resolved by computing the vertical and horizontal components of earth rate as a function of latitude.

As previously shown, the upper X axis gyro is not affected by the rotation of the earth and, therefore, no compensating earth rate torquing signal is applied to this gyro. After the stable element is established at a rough level position, the X axis torquing signal, consisting of earth rate acceleration only (which is a measure of stable element unlevelness), is used to drive the stable element in azimuth to null this signal (fine alignment). At that time, the X gyro's spin axis is aligned to true north and the frame of reference has been established. This alignment condition will remain until the intertial navigation system is manually sequenced to the navigate position.

MAINTAINING THE HORIZONTAL REFERENCE.—When the aircraft remains stationary or moves at a constant velocity, the accelerometer outputs are zero; but if the aircraft attitude changes while maintaining a constant speed, the accelerometers on an unstabilized platform sense an acceleration due to gravity. Since the accelerometers cannot distinguish gravitational accelerations from horizontal accelerations, the integrators develop a fictitious velocity with a corresponding distance error. It is essential, therefore, that the accelerometers be held in a truly horizontal reference plane that is always independent of the aircraft attitude.

This is a fundamental requirement of the inertial navigation system, and the accuracy with which the horizontal reference is maintained will determine the overall performance capabilities of the system. A gyro stabilized platform mounted in a gimbal structure serves as a inertial reference and, in addition, accurately defines directional reference for the coordinate system.

With the platform installed in the aircraft and aligned along the Y axis, it will remain level regardless of aircraft attitude. The instant the aircraft begins to change attitude, for example in pitch (fig. 6-18), the platform gyro senses this angular movement and begins to precess at a rate proportional to the pitching rate. A pickoff coil on the gyro axis senses this movement, thus changing it to a voltage, which is amplified and fed into the pitch gimbal servo drive motor. The motor rotates the stable element exactly equal and opposite to the aircraft angular motion. As a result, it continuously precesses the gyro to its neutral or level position, thus maintaining its output signal at null.

Regardless of any new pitch attitude the aircraft assumes, the gyro will keep the stable element level, since this is the only position which allows its output signal to be at null. In actual practice, the stable element is maintained level and is also aligned in azimuth by a similar method in yaw and roll. This is necessary so that the sensitive axis of the north-south accelerometer is aligned true north-south and the east-west accelerometer is aligned true east-west. The stable element is then accurately aligned to the three coordinates: north (Y axis), east (X axis), and up or true vertical (Z axis). This arrangement allows the accelerometers to accuratey detect aircraft motion.

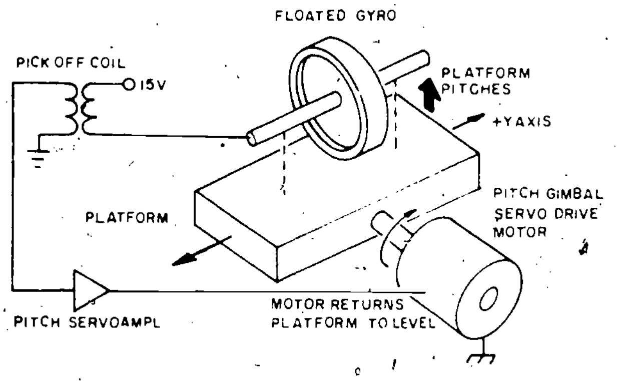

208.178

Figure 6-18.—Gyro maintaining inertial platform level.

MAINTAINING THE VERTICAL REFERENCE.—The stable element must remain perfectly level or the accelerometers will sense a false acceleration due to a component of the earth's gravity. Since the gyros try to maintain their inertial position in space and not with respect to the local vertical, this causes the stable element to drift off level as the aircraft moves over the curvature of the earth (fig. 6-14). This situation would allow a buildup of very large errors in velocity and distance. This condition develops whether or not the aircraft is moving over the earth's surface, because the earth's rotation alone will develop the same type of errors.

The stable element must always be perpendicular to the local vertical or, in other words, the gyros must be caused to precess in such a manner as to maintain the stable element level, as the aircraft moves, with respect to the center of the earth. In this way the sensitive axes of the accelerometers are maintained horizontal to the earth at all times and respond only to the horizontal component of acceleration.

MAINTAINING THE FRAME OF REFERENCE.—Accuracy in maintaining the stable element to the frame of reference determines the overall performance capabilities of the system. Gyro torquing rate signals are continuously computed to maintain the frame of reference. After alignment, the inertial navigation system is manually sequenced to its operating condition (navigate); and if the aircraft were to remain stationary, the gyro torquing rate signals would consist of earth rate only. However, as the aircraft moved over the curvature of the earth, the stable element earth reference would be lost as the gyros precessed due to vehicle movement, as shown in figures 6-13 and 6-14. Therefore, additional gyro torquing signals are continuously computed within the inertial navigation system to compensate for the vehicle's movement. They are aircraft rate torquing signals and depend on the velocity of the aircraft in respect to the frame of reference; that is, east-west velocity and north-south velocity. The angular rate (ω) is directly proportional to the velocity of the aircraft along the periphery of the earth. Aircraft rate torquing is applied to both gyros so that they will precess about all three axes (X, Y, Z) to continuously maintain the frame of reference.

Deriving Velocity and Distance

The inertial navigation system is capable of accurately detecting acceleration of the aircraft, and with the use of precision integrators, determine aircraft velocity and measure distance traveled. Accelerations are measured in units of ft/sec^2 by the accelerometers; but for analog computation, the accelerations are developed in volts per g of accelerating force. The velocity integrator integrates the accelerating force to obtain velocity; the distance integrator integrates velocity to obtain the distance traveled.

There are two velocity integrators in the system to obtain V_x and V_y along the two horizontal axes and two distance integrators to obtain distance traveled along the two horizontal axes. In addition, some inertial navigation systems employ one other velocity integrator to obtain V_z along the vertical axis.

Accelerometer Output Corrections

The arrangement of the accelerometers with their sensitive axes horizontal and perpendicular to one another is perfectly suited to navigation over a stationary plane or over flat terrain moving at uniform speed in a straight line. The earth, however, is a rotating sphere and, insofar as the inertial platform is concerned, only points along the equator can be considered to possess uniform linear motion. Here, and only here, the accelerometer signals can be translated directly into position information. Since very vew flights are carried out exactly along the equator, it is necessary to provide an automatic device that will alter the accelerometer signals so that the system reports meaningful information. The corrective device is purely electrical. All or part of the circuitry is active whenever a velocity signal voltage is present anywhere north or south of the equator. These circuits utilize the velocity signals, modified according to the latitude of the aircraft position, to insert artificial acceleration signals to those already in the accelerometer output circuits.

The circuits are divided logically—some are devoted to centripetal effect, some to Coriolis. It should be noted, however, that the corrections are complementary.

Although it is convenient to assign a separate purpose to the circuits, as in the following discussions, the functions overlap, and it is not entirely accurate to consider them separately.

CENTRIPETAL CORRECTION.—Centripetal correction differs from that of the Coriolis correction in that it has no relationship to earth dynamics. If the earth were stationary, it would still be necessary to insert centripetal correction voltages to the accelerometer signals to obtain an accurate plot of any course that does not exactly coincide with one of the earth's coordinate great circle routes; that is, an exact polar or an exact equatorial orbit. On a great circle route, a route that ultimately circles earth center, every linear acceleration initiates motion; but unless the route is due north-south or directly along the equator, the system is incapable of plotting it accurately from the "raw" accelerometer signals.

The orbit resulting from linear acceleration, and the logic of applying centripetal corrections to obtain an accurate plot of track, can be understood if one considers any simple circumstance involving a single acceleration and the inertial reaction. For example, if a perfect bowling lane were built completely around the earth at the equator, a bowler could theoretically stand behind the pins, roll the ball in the opposite direction, and (after a few years' time) get a perfect strike on the head pin. But if the lane were built on latitude 10°N, the ball would invariably veer south; and after a few thousand yards would fall into the right-hand gutter if rolled east or into the left-hand gutter if thrown west—in both cases, the south gutter. The reason for this phenomenon is evident in the consideration of a lane built on a latitude in the Arctic only a few yards from the pole. Here the curve of the lane is obvious, and it is readily apparent that if the ball is accelerated due east it

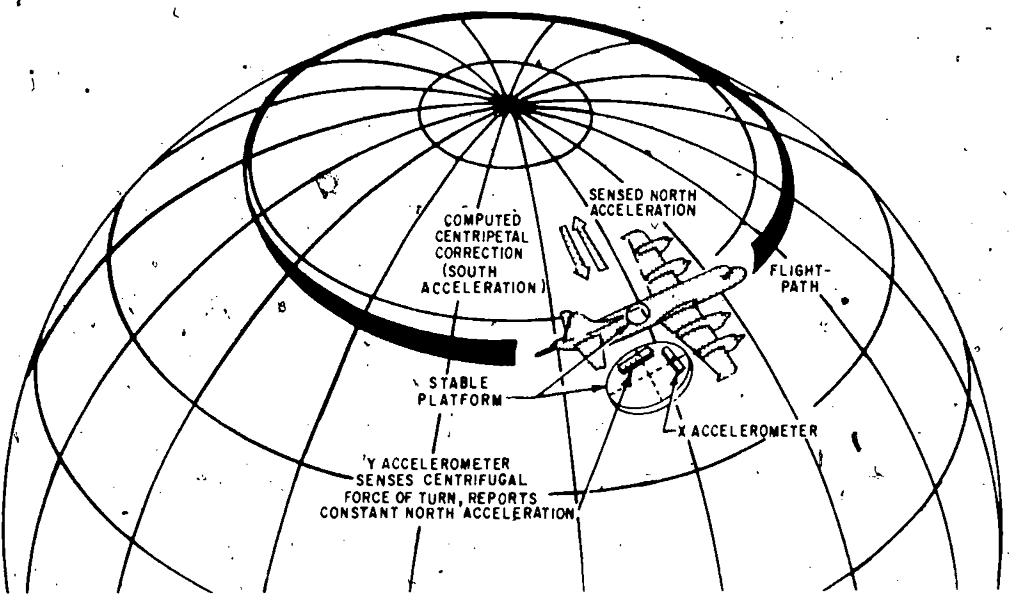

208.179

Figure 6-19.—Centripetal correction along latitude.

will in fact follow, in inertial space, a straight course that intersects the outside gutter. If the ball is to roll at uniform speed and remain in the alley, a uniform north acceleration force must be exerted on the ball in transit. Note that in this case the north acceleration is a corrective force and does not produce north velocity with respect to the alley.

As illustrated in figure 6-19, a north-south accelerometer aboard an aircraft circling the pole finds the same phenomenon. In a steep-banked turn, the centrifugal force tends to deflect the north-south accelerometer. It blindly reports a steady north acceleration, and a growing north velocity is recorded when, in fact only east velocity exists.

The fault does not lie in the accelerometers but in the nonlinear pattern of the accepted geographic coordinate system to which the platform is slaved. The coincidence of earth axis and pole seems to imply earth dynamics in the phenomenon, but actually this is not a factor. If the coordinate systems were shifted to place the pole at New York and New York were used as the focal point of one accelerometer axis of an inertial navigator circling the city, the accelerometer sensitive to this axis would report acceleration toward it.

In a spherical coordinate system, any linear vehicle acceleration that initially affects both accelerometers will NEVER result in the vehicle's reaching the pole. The vehicle will follow a great circle track that first approaches one of the poles, will fly due east or west for a brief period, and will then depart the pole as shown in figure 6-20.

Although the velocity resulting from any given acceleration is initially computed correctly with respect to space, the direction of the speed must be constantly altered if the navigational system is to accurately report a great circle course that crosses both latitude and longitude. On such a course, the aircraft does not turn as it does following a line of latitude, and consequently it does not generate uniformly false north acceleration signals. The centripetal correction circuit does, however, continue to "plant" signals of acceleration toward the equator. This has the effect of altering the reported speed (the result of velocity along both axes); and since no actual acceleration has taken

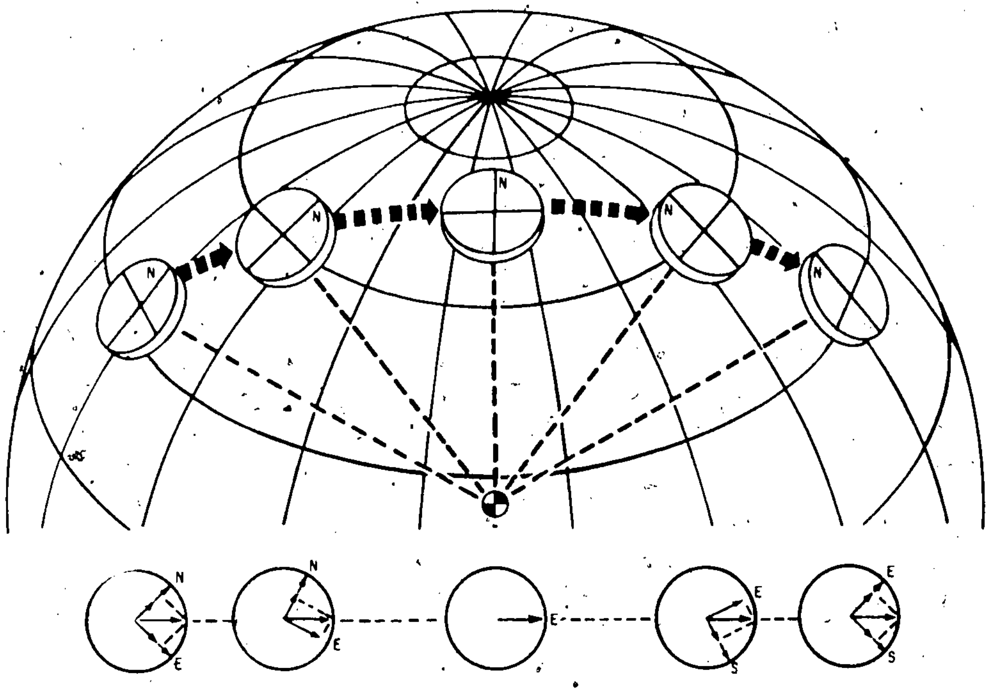

208.180

Figure 6-20.—Platform on great circle route.

place to cause a speed change, it is apparent that the centripetal correction circuit must simultaneously plant a positive acceleration in one axis if it plants a negative acceleration in the other. Therefore, when a portion of the north or south velocity is canceled, the system must add a sufficient increment of east or west acceleration to allow the reported total speed to be unchanged while the reported direction of flight is "bent" toward the equator. As shown in figure 6-20, after a single north-east acceleration has occurred, the north vector becomes progressively shorter. Note that the resultant speed vector is always of the same magnitude.

In summation, it can be said that an east or west acceleration in either hemisphere contains a "hidden" element of acceleration toward the equator, and the centripetal correction simply acts to reveal this element. If the aircraft velocity is anything but due north or south, in the northern hemisphere the centripetal correction "manufacturers" a south velocity component. In the southern hemisphere, it manufactures a north component.

CORIOLIS CORRECTION.—As mentioned previously, the scope of the centripetal correction, limited to transmitting the effect of linear acceleration to the resulting track over a sphere, makes no allowance for earth dynamics. Since the earth rotates toward the east, all points on the surface possess a constant tangential velocity that is maximum along the equator and progressively less at higher latitudes.

Tangential velocity is a linear quantity and refers to the speed and direction an object would travel in a straight line if freed from the earth's gravity. An object near the equator travels about 1,000 miles per hour in a circular path, but if freed from earth's gravity and atmosphere, it would travel at that speed in a straight line away from the earth (on a tangent to the earth). Its tangential velocity is 1,000 miles per hour. If the object is moved toward the north pole, its speed in circular travel will decrease as it approaches the pole, and will be zero when placed exactly over the pole.

Although it is true that the earth has a trajectory in space, this motion is of no importance to the inertial navigation system because it is shared by every point on the sphere. The only variable involved is the variation in the earth's tangential velocity at different latitudes. While the accelerometers do not automatically make allowance for this variation, it must be taken into account.

The need for such an allowance is graphically illustrated in an example in which an inertial navigator, totally devoid of any Coriolis corrective mechanism, is put aboard a train in the northern hemisphere, aligned, and transported north. If it is assumed that the train is located at a latitude at which the earth's tangential velocity is 800 knots east during the alignment, it is obvious that the train's eastward velocity must be constantly reduced as it progresses north. This is the same thing as saying that an acceleration is occurring.

Since the train is constrained by the track, a force from the east will be exerted on the wheel flanges. This force is sensed by the east-west accelerometer as acceleration to the west, and a growing west velocity is computed. As indicated by figure 6-21, an aircraft flying north directly along a moving longitude meridian will subject the east-west accelerometer to this same force as

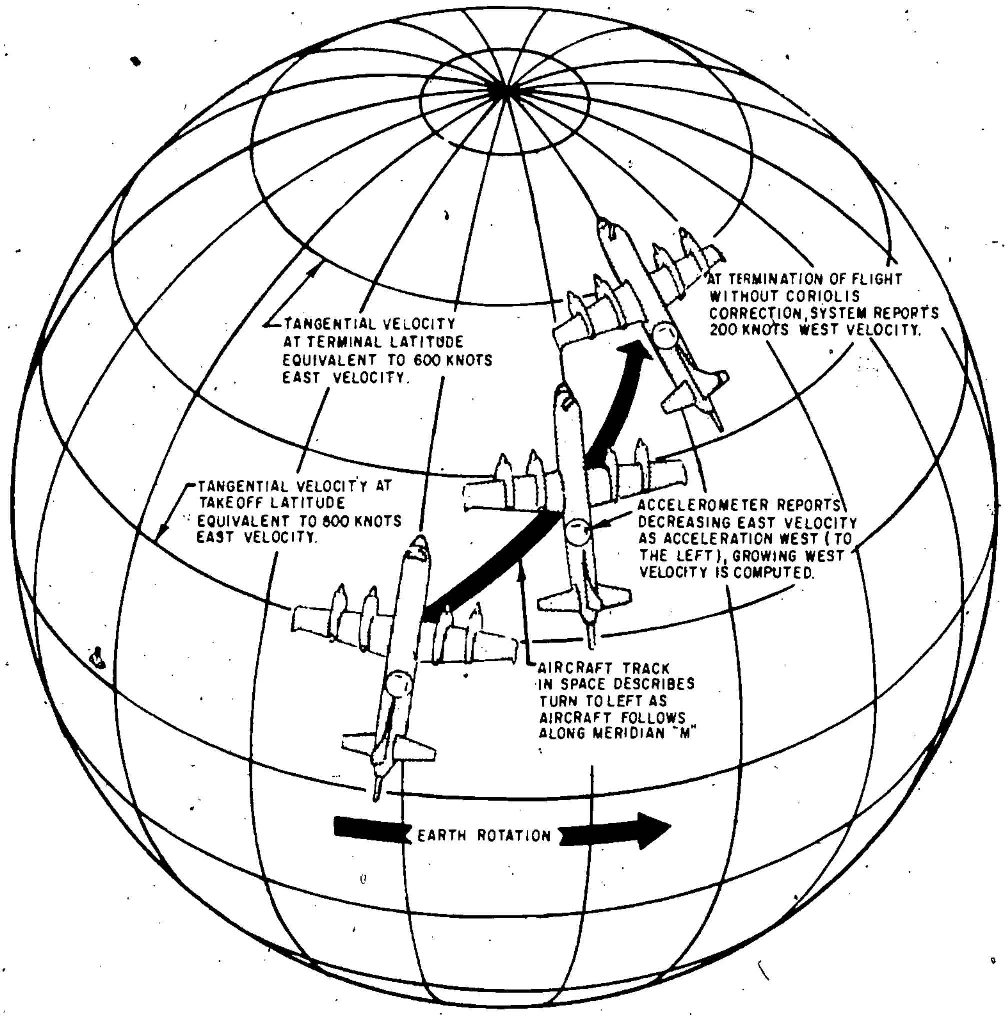

208.181

Figure 6-21.—Coriolis effects.

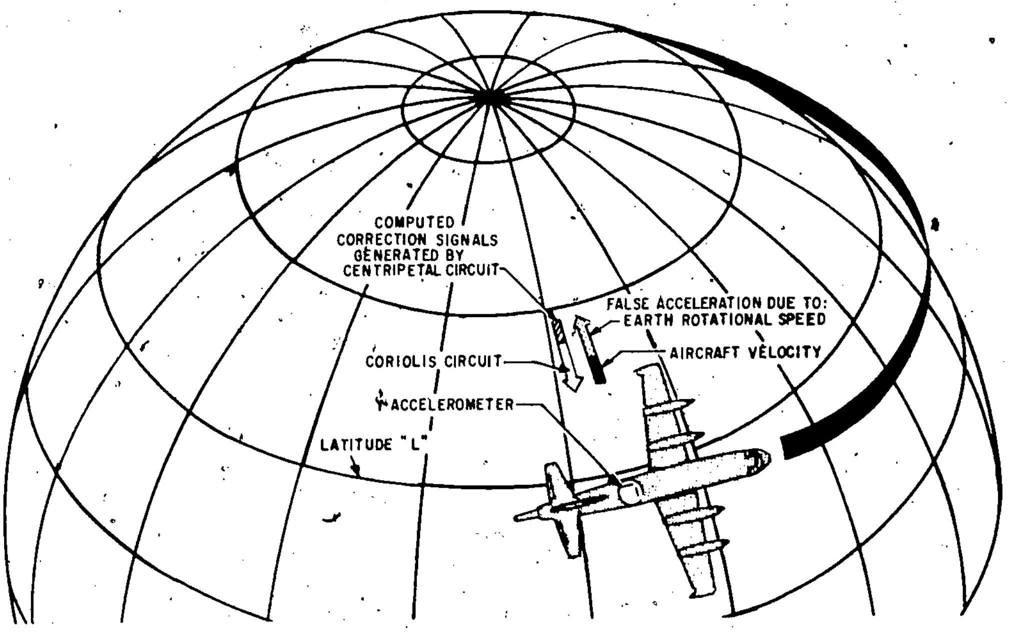

208.182

Figure 6-22.—Coriolis and centripetal corrections.

its course in space is altered to the left to compensate for the decreasing eastward velocity of the earth's surface.

If either vehicle (train or aircraft) travels north and stops at a latitude where the earth's tangential velocity is 200 knots less than the tangential velocity at the point of its initial alignment, the velocity computer will continue to report that the vehicle is traveling west at 200 knots even through it is perfectly static.

The Coriolis correction prevents this circumstance from occurring by creating exactly enough east acceleration signal to offset the continual west acceleration signal generated by the east-west accelerometer as it travels north. The east and west accelerations cancel, and no change in longitude is reported. Of course, if the aircraft makes the return trip, the platform begins the trip under the delusion that 600 knots east is zero velocity and, as it travels south, the increasing earth tangential velocity causes it to constantly report east acceleration. In this case, the Coriolis correction also reverses; that is, it manufactures a west acceleration that exactly voids the east acceleration.

Note that in both the foregoing cases, the Coriolis correction has supplied an artificial signal of acceleration to the right side of the actual track. This is the nature of the Coriolis correction, regardless of the direction of travel in the northern hemisphere. When the track is due east along a latitude line, as illustrated in figure 6-22, the centripetal correction offsets the increment of north acceleration generated by the aircraft speed; the Coriolis correction accounts for the additional force generated by earth rotation. For example, if the earth's tangential velocity at latitude "L" is assumed to be 700 knots and aircraft speed is 350 knots, it is obvious that the total speed is 1,050 knots. Centripetal correction offsets the acceleration caused by the centrifugal force of a 350-knot turn of this radius; Coriolis correction offsets the force of a 700-knot turn. In this case, the two corrections are summed.

If the course is reversed and the plane flies west, the corrections become opposite in polarity—the centripetal signal is still south, but Coriolis is north (to the right of the track)—and

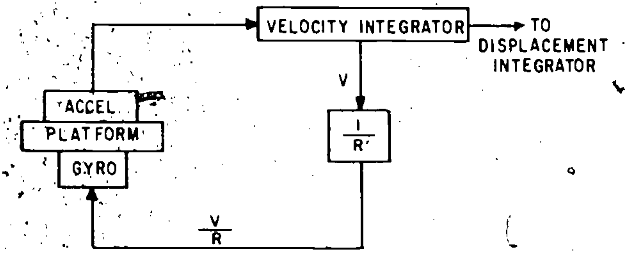

208.183

Figure 6-23.—Simplified Schuler tuned loop, platform level.

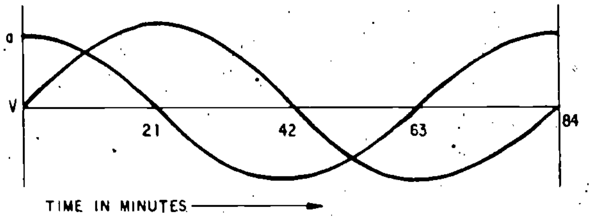

208.185

Figure 6-25.—Schuler tuning—acceleration errors vs velocity errors.

therefore only a part of the larger correction is effective.

Schuler Tuned Loop

The Schuler tuned loop is a closed loop circuit between the accelerometer, velocity integrator, and stable element. It is designed to prevent enormous velocity and distance errors caused by misalignment of the stable element. Figure 6-23 illustrates a simplified Schuler tuned loop with the platform aligned.

The output of the accelerometer is integrated to provide a velocity signal. The velocity signal is multiplied by 1/R, where R is equal to the earth's radius, thus deriving an angular velocity about the earth's surface, V/R. This angular velocity is then used to torque an integrating gyro and cause the platform to precess about the earth's surface at the same rate that it is being transported over the surface, thereby maintaining the platform normal to the local vertical.

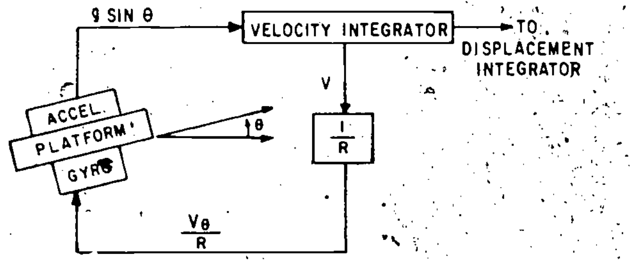

208.184

Figure 6-24.—Simplified Schuler loop, platform unlevel.

There are two such loops in an inertial navigation system, one for the north and the other for the east. The accelerometer in the north loop senses north-south accelerations, yet the gyro in the north loop senses east-west angular rates—the vehicle's angular movements about the east-west axis.

By convention, accelerometers and gyros are named according to the direction of their sensitive or input axis, and the inertial or Schuler loop takes the name of its accelerometer. The north loop contains the north accelerometer and the east gyro, while the east loop contains the east accelerometer and the north gyro.

With the platform initially unlevel, as shown in figure 6-24, the accelerometer senses a component of gravity, g sin θ. This signal is integrated, resulting in the velocity signal Vθ. The velocity signal then causes the gyro to precess in a clockwise direction. When the accelerometer is positioned so as to sense zero gravity, the velocity output continues to torque the platform in a clockwise direction, causing the accelerometer to now sense a gravity component of the opposite polarity. This signal causes the velocity signal to decrease to zero and then to build up in the opposite direction and precess the platform in a counterclockwise direction. The oscillation set up by this mechanization has a period of 84 minutes, equal to that of the Schuler pendulum. Figure 6-25 shows the buildup and decay of acceleration and velocity errors as a result of such errors as just described.

ALIGNMENT

As has been said before, inertial navigation depends on integration of acceleration to obtain velocity and position. In any integration process, the initial conditions must first be known, which in this case are velocity and position. The accuracy to which the navigation problem is solved depends greatly upon the accuracy of the initial conditions. Therefore, system alignment is of paramount importance.

Basically, system alignment consists of creating a coincidence between the platform axes and the computer axes. This can be done by rotating either or both systems. There are two general methods of accomplishing this condition: (1) The system is slaved to an external reference source, or (2) the system may have the built-in capability to sense misalignment and correct itself. Of course, combinations of both these methods can be, and often are, used.

External references take three basic forms: terrestrial, celestial, and inertial. The terrestrial system uses surveyed lines, benchmarks, plumb bobs, and bubble levels. These methods result in level accuracies of about 10 seconds of arc and heading accuracies to 3 minutes of arc. Celestial information is usually obtained from star trackers and radio sextants with accuracies to 10 seconds of arc. When an inertial system is used as a source, the accuracies are dependent upon its initial source and of course the length of time since it was last aligned. Such a method is usually used for mobile alignment where primary sources cannot be used.

The use of an external reference system requires transfer devices to transmit the reference information to the system. The transfer devices take the form of optical or electromechanical. Optical devices include theodolites and autocollimators; the electromechanical devices are synchro-resolver or digital type. Optical methods are able to produce accuracies of a few seconds of arc, but the electromechanical methods are only good to about 30 seconds of arc.

In self alignment, the inertial sensing instruments mounted on the platform sense the deviation from the desired position. In order to determine the orientation of a three-axes orthogonal (perpendicular) coordinate system, it is necessary to have at least two noncollinear (not parallel) reference vectors. For self alignment, the earth's spin vector and the mass attraction gravity vector serve this purpose. The self alignment puts less requirements on the computer, because the accelerometer outputs do not have to be resolved into components of gravity and vehicle acceleration. If the accelerometers and gyros are mounted on the same element, then their relative position can be fixed and does not have to be computed.

Self alignment is often divided into two modes (1) Rough or course alignment (sometimes called caging), and (2) fine alignment. Fine alignment itself is divided into two modes, leveling and gyro compassing.

Rough Alignment

The purpose of rough alignment is to provide a convenient starting point for the later phases of alignment. In most cases, the gimbals are slaved to their own synchro outputs or to some external source which has a particular orientation with respect to the vehicle. The duration of rough alignment is controlled by a timing network and in most cases is approximately one-half minute long.

Fine Alignment (Leveling)

Fine alignment or leveling is accomplished by rotating the platform axes to the computer axes. For a locally level system, this is done by placing the X and Y accelerometer axes mutually perpendicular to the gravity vector. Since the accelerometers are mounted at right angles, a motion about one axis will cause the other to go through an angle with respect to the gravity vector. Therefore, by connecting the output of an accelerometer in such a way as to torque about its perpendicular axis, it can slew itself to a null position—where it senses no component of gravity. As pointed out earlier, the device which can be torqued about an axis is a gyro. In this case, the gyro which is torqued is the one sensitive about the axis perpendicular to the accelerometer being leveled; that is, the Y (north) gyro torques the X (east) accelerometer to level, etc.

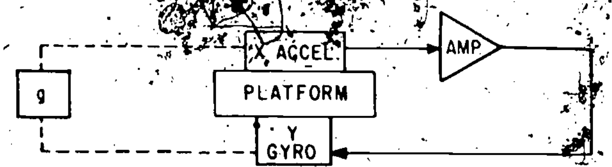

208.186

Figure 6-26.—Typical leveling loop.

The accelerometer will provide a dc voltage that is proportional to the sine of the off level angle. In the leveling mode this voltage is amplified and applied to the gyro whose sensitive axis is perpendicular to the sensitive axis of the accelerometer. (See fig. 6-26.) In other words, the output of the X accelerometer is applied to the Y gyro and the output of the Y accelerometer is applied to the X gyro.

Gyrocompassing

As previously mentioned, any gyro which does not have its spin axis parallel to the earth's spin axis will apparently precess with respect to the earth. The rate at which it precesses is proportional to the angle between its spin axis and the earth's spin axis. This angle can be resolved into two components. Since the gyro spin axis lies in the level plane previously established, one component can be found which is in the plane itself. Now it is only necessary to find the angle between the spin axis and a vector in the level plane which intersects the earth's spin vector. After these two angles have been found, it can be said that the exact position of the platform axis is known.

It can be seen that the rate at which the gyro in question appears to precess is equal to $\Omega \cos \lambda \sin a$ where

Ω = the earth's rate of rotation
λ = latitude
a = the angle the platform makes with true north

Now the spin axis of this gyro can either be torqued to a place where this term goes to zero ($a = 0$) or a torquing term can be developed in the computer equal to this and then applied to the gyro. In either case, the position of the platform will be known. Figure 6-27 shows a typical heading alignment loop.

In a north seeking platform, the earth's rotation is utilized to align the platform to true north. This is accomplished by using the output of the Y accelerometer and applying it to the torquing coils of the Z (azimuth) and the X (east) gyros. At the beginning of the gyrocompass phase (after the platform is leveled), the stable element is torqued in azimuth to null out the residual east gyro torquing rate. If, at this time, the stable element is not aligned to true north, it will tilt due to precession of the gyros. The stable element deviation from the level position is sensed by the Y accelerometer because of gravity. The output of the accelerometer is then used to torque the X gyro until the stable element is leveled and, at the same time, to torque the Z gyro in azimuth. The process continues until the stable element is aligned to true north.

Once the platform is aligned, the system is switched from the alignment phase to the navigation phase of operation. In the navigation phase, the stable element would maintain an orientation with reference to free space if it were not for corrections supplied by the computer. The computer maintains the stable element level with respect to the earth and oriented to true north. If not, the accelerometers sense gravity in addition to movement of the aircraft. Coriolis, centripetal, and earth rate corrections are computed and used to hold the stable element level and aligned to true north. In the navigation phase of operation, the orientation to true north is dependent on the original aligned position and the computed corrections.

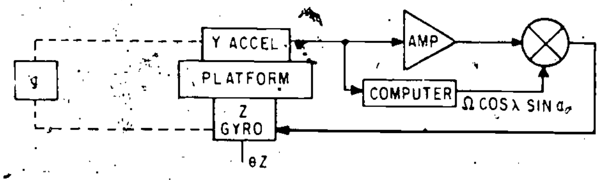

208.187

Figure 6-27.—Typical heading alignment loop.

Alignment at Sea

The problems that arise in aligning an aircraft inertial navigation system at sea are much more complex than alignment on a fixed earth base, even though our inertial reference is another inertial navigation system of very high accuracy, which is available aboard aircraft carriers. The inertial navigation reference system aboard aircraft carriers is the Ships Aircraft Inertial Navigation Alignment Console (SAISAC) and the Relative Velocity Computer (RVC). Even though there are outlets on the flight deck that make it convenient to pipe the ship's inertial navigation reference information into the aircraft inertial navigation system, one major problem still remains which makes proper alignment difficult. The accelerations experienced by the ship's inertial navigation accelerometers located below decks and remote from the aircraft are not the same accelerations experienced by accelerometers in the aircraft's inertial navigation system located on the flight deck.

COARSE SEA ALIGNMENT.—During coarse sea alignment, the best available true heading is derived from the SAISAC and the RVC. Aircraft carrier true heading is supplied to the RVC where a manually selected aircraft heading angle with respect to the aircraft carrier is inserted. The combined signals are then supplied to the heading computer in the aircraft's inertial navigation system, thus concluding the coarse sea alignment.

FINE SEA ALIGNMENT.—During fine sea alignment, the accelerometers sense the aircraft carrier movement in addition to gravity. Since only the gravity component is used in the leveling, the accelerometer output caused by the aircraft carrier movement is cancelled by continuously computed corrections supplied by the SAISAC and RVC. The accelerometer error signals are integrated to supply a velocity. The reference velocity supplied by the RVC during sea alignment, which is actual aircraft velocity, is subtracted from the accelerometer derived velocity. The difference corresponds to the gravity component sensed by the accelerometer. It is amplified and applied to the torquing coils of the gyros. The gyro pickoff signals are processed to cause the gimbals to rotate and cancel the pickoff error signals. The stable element is torqued until the accelerometers indicate a null or level condition.

TYPES OF INERTIAL NAVIGATION SYSTEMS

Basically, inertial navigation systems can be classified under two broad types: pure and hybrid.

The types of pure inertial navigation systems are analytic, semianalytic, geometric, and strap-down.

The types of hybrid inertial navigation systems are radio inertial, Doppler inertial, and stellar inertial.

PURE INERTIAL NAVIGATION SYSTEMS

Analytic Inertial Navigation System

The analytic system utilizes a platform with a fixed angular reference to some point in inertial space. No attempt is made to force the accelerometer input axes into a preferred alignment with respect to the earth. This method does not require gyro torquing and, as a result, the platform is subjected to errors of gyro drift only.

Because the platform remains rigid in space and rotates about the earth, the output accelerations become complex. They essentially consist of two major accelerations—the actual acceleration of the vehicle, and the gravitational acceleration of the earth. For navigation purposes only the aircraft accelerations are required and wanted; therefore, the gravitational accelerations must be canceled out. Yet, this cancellation is difficult to obtain because the earth's gravitational acceleration is not uniform and therefore an enormous amount of data must be stored in the computer to effect this cancellation.

The significant disadvantages of the analytic inertial navigation system are the result of maintaining the accelerometers referenced to a fixed point in inertial space. As the stable element is transported about the earth, the accelerometers are required to sense not only aircraft acceleration, but the component of the earth's gravitational field as well. The accelerometers required for this system must have a wide dynamic range as well as a high overall accuracy. The most serious problem, however, is the cancellation of the gravitational accelerations. Irregularities in the earth's shape and mass cause variations in the gravitational field; therefore, the cancellation of these variations requires a complex computer with a very large storage capacity.

Semianalytic Inertial Navigation System

The semianalytic system is the inertial navigation system most commonly in use today. All naval aircraft that presently use inertial navigation systems use this type either as a pure system or in conjunction with another navigation system as a hybrid system. The chief advantage of this system is that the platform gimbal structure is simple, and the computer functions are easily attained by either analog or digital means.

The semianalytic system maintains the stable element normal to the earth's gravitational vector at all times, as was discussed previously in this chapter. In this system, the computer converts the output accelerations of the stable element to angular velocities. These angular velocities are then used to torque the platform gyros and maintain the platform normal to the earth's gravity vector.

To prevent the platform from precessing off level due to the earth's rotation about its polar axis, the computer also develops signals equal to the angular velocity of earth resolved into the system axes and applies them to the gyro torquers. A typical simplified block diagram of a semianalytic inertial navigation system is shown in figure 6-28.

In a semianalytic inertial system, the platform is aligned normal to the gravity vector, and it may or may not be aligned to true north. The output of the north accelerometer is sent to an integrator where it is summed with acceleration correction terms to derive a true vehicular acceleration over the earth's surface. This acceleration signal is then integrated with respect to time, deriving the north velocity component of the vehicles track. Through scaling, the velocity term is converted to an

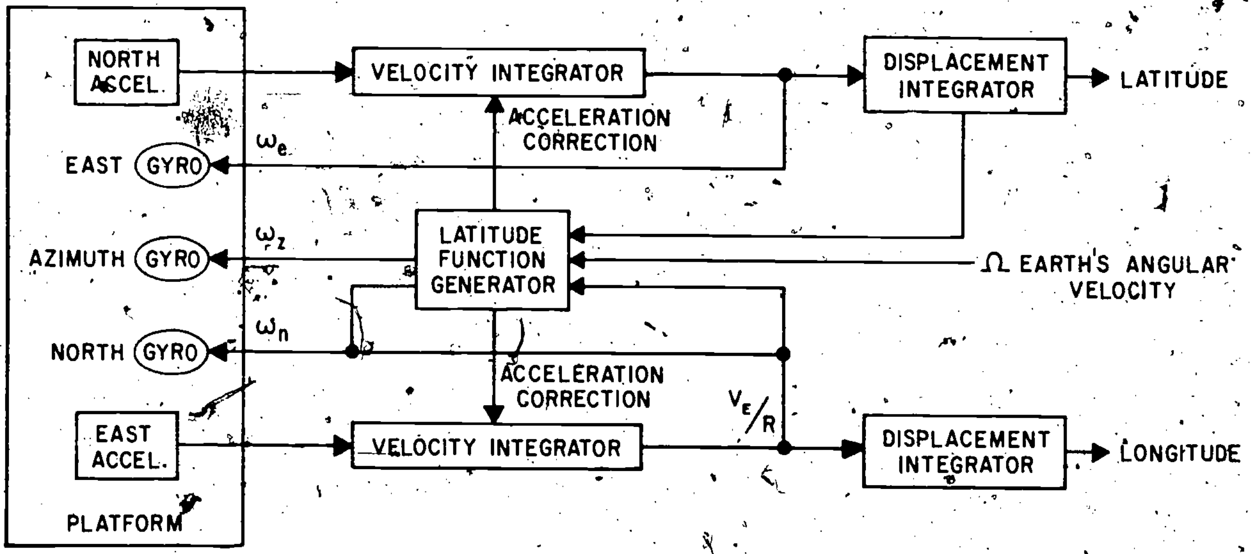

208.188

Figure 6-28.—Typical semianalytic inertial navigation system, block diagram.

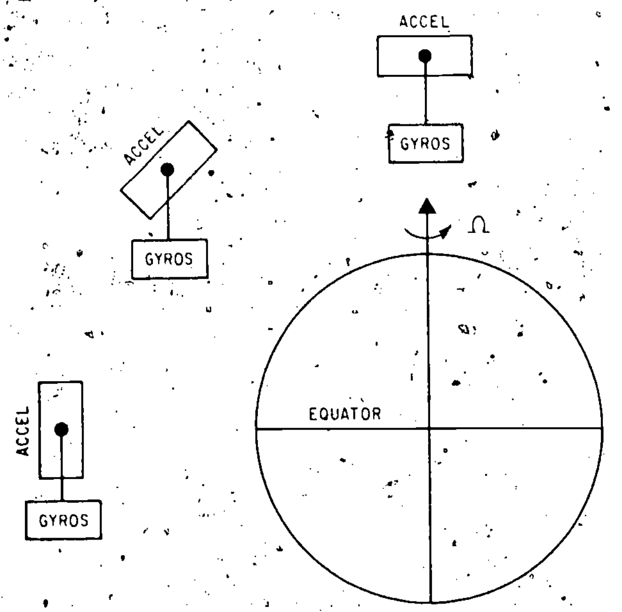

208.189

Figure 6-29.Transport of the geometric system's stable element.

angular velocity and integrated to provide a position readout in the form of latitude. In addition, the north angular velocity is used in the latitude function generator to develop accelerometer correction terms and a gyro torquing signal for the east gyro.

The output of the east accelerometer is summed with accelerometer correction terms and integrated to provide an east component of the vehicle's track. Through scaling, the velocity signal is converted to an angular velocity and is sent to the latitude function generator where it is used to develop accelerometer correction terms and torquing signals for the north gyro and the azimuth gyro. In addition, the angular velocity is integrated to develop a position readout in the form of longitude.

Geometric Inertial Navigation System

The geometric system utilizes a gyro system which, as in the analytic system, is referenced to inertial space in nonrotating plane. The accelerometers, however, are mounted on a gimbal structure in such a manner as to remain normal to the earth's gravitational field.

Figure 6-29 shows the relationship of the accelerometers and gyros as the platform moves over the surface of the earth. When the platform is aligned at the equator and is then moved north, the gyros maintain their position in inertial space. The accelerometers remain in a plane tangent to the earth's surface at all times.

The main advantage of this system is that the gyros are not torqued. Therefore, scaling of the gyros is not critical.

The major disadvantage is economy. The cost of mechanizing the system requires a high degree of acuracy in positioning the latitude and longitude gimbals. The semianalytic system requires much less precision to achieve similar accuracy.

Strap-Down Inertial Navigation System

In the strap-down system, the gyros and accelerometers are mounted directly to the frame of the vehicle. Its principal use is in ballistic missiles and spacecraft. This type of system can be mechanized for use in aircraft, but the present state of technology makes it more feasible to use one of the other type systems for aircraft use.

The strap-down system requires complex digital computers; analog computers are not accurate enough for use in this system.

The computer in the strap-down system replaces the gimbal structure just as the gimbal structure replaced the physical length of the Schuler pendulum. Figure 6-30 shows a simplified block diagram of a strap-down inertial navigation system.

In the strap-down system, the gyros provide angular rates which are then converted to directional cosines (i.e., space vectors). These signals are used to determine the attitude of the vehicle with respect to an inertial frame of reference. The coordinate converter utilizing inputs from the accelerometers and the directional cosine converter determine accelerations along the inertial reference axes. The position converter accepts inertial acceleration and altitude information to develop Cartesian coordinates representing the vehicle's

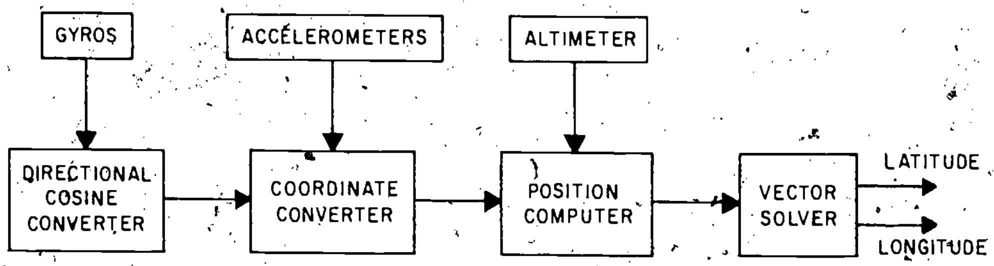

208.190

Figure 6-30.—Strap-down inertial navigation system.

position in inertial space. These vectors are then sent to the vector solver where they are summed to provide readouts of latitude and longitude.

Alignment of the strap-down system is accomplished by supplying the directional cosines of the vehicle frame, with respect to a desired inertial reference, to the computer. No physical orientation of the vehicle is required.

HYBRID INERTIAL NAVIGATION SYSTEMS

The hybrid system is a combination of inertial navigation system and some other type of navigation system for the purpose of updating or improving the accuracy of the inertial navigation system. In other words, the purpose of the hybrid inertial system is to combine two navigation systems in such a manner as to retain the good characteristics of both.

There are two types of updating processes used in hybrid systems. One type is the damping effect which compares the inertial ground velocities with the ground velocities of some other system. The error, or difference between the two velocities, is used to damp out platform errors. The other type is the reset method. This method ignores the orientation of the platform and merely resets the position of the velocity shafts periodically.

Radio Inertial

The radio inertial system is a system employing an inertial navigation system which is updated or damped periodically by a positioning system such as LORAN.

Radio and inertial navigation systems have complementary characteristics that can be integrated to provide performance characteristics and capabilities beyond the performance of either system. The inertial navigation system is used to carry the radio system through areas of poor radio reception, and the long term errors of the inertial navigation system are taken out by the radio system in areas where radio reception is good.

In a typical radio inertial navigation system, LORAN is used to damp the inertial velocities and update the present position. The LORAN signals used are differentiated position changes of the hyperbolic time-difference measurements. When the LORAN position changes are resolved into velocities, they can be compared with the inertial velocities and used for damping.

Doppler Inertial

The Doppler inertial is a system employing an inertial navigation system which is damped by the ground velocity signals developed by a Doppler radar system. In this type of system, the use of accurate groundspeed information from a Doppler radar system is used to damp the inertially derived ground velocities.

The Doppler radar navigation system determines groundspeed by computing the apparent frequency shift of reflected electromagnetic radiation. Depending upon the velocity of the vehicle and the type of terrain, the accuracy may be in the order of a couple of feet per second. The advantage of this source of velocity is the fact that the error is not cumulative and, therefore, it can be used to null

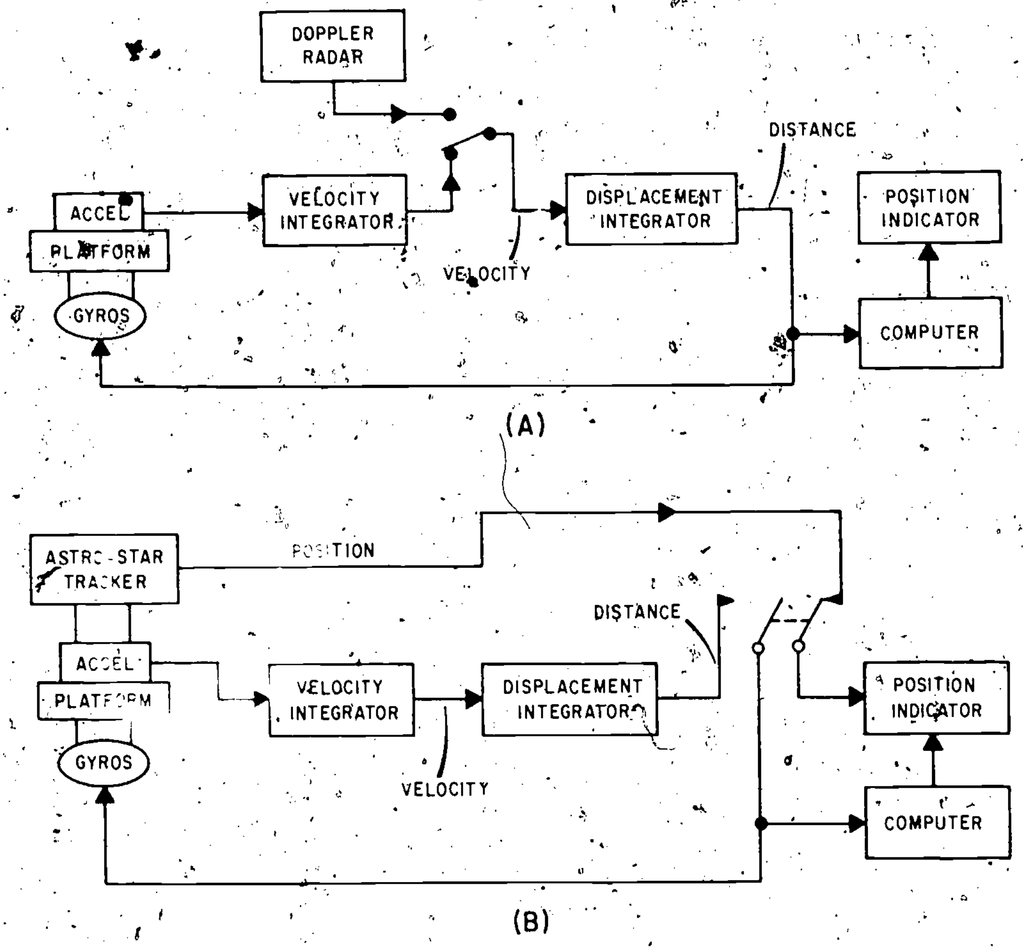

208.191

Figure 6-31.—Simplified diagrams of hybrid inertial systems. (A) Doppler inertial; (B) stellar inertial.

those errors in the inertial system which are cumulative. The velocities obtained from the Doppler radar are referenced to the vehicle axes. These velocities are usually designated heading and drift. In order to develop north-south and east-west velocity correction terms, the Doppler terms are resolved by the true heading angle of the vehicle. These velocities are compared with the inertial velocities, and the difference is used to damp the Schuler oscillations of the system.

Stellar Inertial

Steller Inertial is a system employing an inertial navigation system and an optical star tracker system used to eliminate the effects of gyro drift on the inertial platform. In this system, stellar observations are used to update any present position error in the inertial system. The requirements for accurate star information are as follows:

1. An up-to-date star catalogue.
2. A reliable time standard.
3. A well aligned astrotracker which can be stabilized from vehicle motion.

The first two requirements are relatively easy to obtain, and the third is the limiting factor on the accuracy. Each arc second of telescope misalignment will cause 100 feet of position error; hence, for half-mile accuracy, the alignment must be below 30 seconds of arc. In practice the astrotracker is directed by signals from the inertial system to a particular elevation angle and relative bearing of a reference star. Next, a search pattern is conducted until the astrotracker locates the particular body. After location, the difference in directed and actual elevation and relative bearing is computed; this, in turn, is used to update present position.

Figure 6-31 shows a simplified block diagram of a Doppler inertial system and a stellar inertial system.

Note that in the Doppler inertial system the output of the Doppler radar is a velocity function which is supplied to the second integrator of the inertial system, thus producing a distance traveled when integrated. The steller inertial system receives position information from the astrotracker which is supplied directly to the position indicator.

FUNDAMENTALS SUMMARY

The combination of accelerometers and gyros mounted on a stable element, which is continuously held level with respect to the earth and continuously holds alignment in azimuth to a true north orientation (or a known position with respect to true north) regardless of aircraft attitude, provides the basic fundamentals from which the inertial navigation system derives all navigation computations. The computer receives accelerometer outputs, and velocity is computed by integration. Velocity is then integrated to compute distance.

CHAPTER 7

AUTOMATIC FLIGHT CONTROL SYSTEM

The first electronic automatic flight control system (AFCS) to be installed in naval aircraft was the Eclipse-Pioneer P-1 automatic pilot. The P-1 was a closely integrated system which was ideally suited to the requirements of the then current aircraft. It served the dual purpose of providing direction and attitude indications to the pilot as well as stabilization signals for autopilot control.

While highly satisfactory operation was obtained in the earlier aircraft, tests indicated that the system did not provide adequate control, nor did it provide all of the desirable features needed for later aircraft. Hence, development of the Eclipse-Pioneer P-3, the General Electric G-3, and the Sperry S-5 was undertaken.

During the period of transition from the P-1 autopilot to the P-3, G-3, and S-5, considerable changes developed in naval aircraft. The jet engine produced greater speed ranges and higher control forces, which required the installation of boost or full power surface control systems. Also, many aerodynamic and control system changes were made to obtain the specified performance characteristics. In many cases these changes necessitated corresponding changes in automatic flight control systems (AFCS).

It is suggested that you review the information in the AFCS chapter of *AE 3 & 2*, NAVEDTRA 10348 (Series). The chapter discusses the aerodynamic theory of fixed- and rotary-wing aircraft, as well as the operation of an automatic flight control system in a typical Navy fixed-wing aircraft. The chapter also discusses automatic stabilization equipment found in a typical Navy helicopter.

It is beyond the scope of this training manual to discuss all types of automatic flight control systems. However, with a knowledge of the basic functions of the autopilot and some of the newer developments, this chapter will familiarize the AE with the operation and function of the newer types. A typical system, the AN/ASW-16 which is used in the A-6A aircraft, has been selected for discussion in this manual. To provide the AE with an understanding of the overall operation and relationship of the AFCS and other aircraft systems, the modes of operation are discussed first; and second, a functional description of the system components is given. The remaining portion of the chapter is devoted to a discussion of the theory of operation.

MODES OF OPERATION

The Automatic Flight Control System AN/ASW-16 is an electromechanical error-sensing, coupling, shaping, and amplifying system. In general, it consists of three main control loops that correspond to the aircraft control axes—rudder (yaw), flaperon (roll), and stabilizer (pitch). The system provides three-axis stability augmentation, attitude control, and automatic flightpath control of the aircraft. The system can be operated in any one of the following seven modes:

1. Stability augmentation.
2. Attitude hold.
3. Altitude hold.
4. Mach hold.
5. Return to level.
6. TPQ-10 (radio receiver ground control steering).
7. Command—(including roll- and g-commands from the ballistic computer set or

automatic landing system (ALS) data link inputs).

Each of these modes is manually selectable by the pilot if the AFCS interlocks are satisfied.

The ALS data link, TPQ-10, and command modes are not presently implemented in the aircraft. However, the system does contain the necessary circuitry to be used with ALS equipment when it is installed. The overall relationship between the AFCS and the other aircraft systems is illustrated in figure 7-1. A brief discussion of each of the operating modes is presented in the following paragraphs.

STABILITY AUGMENTATION MODE

The stability augmentation mode performs four specific functions–pitch, roll, and yaw damping, and turn coordination. The three-axis damper automatically reduces aircraft motion in each axis by positioning the stabilizer, flaperon, and rudder in proportion to aircraft pitch rate, roll rate, and yaw rate, respectively. Signals from rate gyroscopes are used to command control surface positions through electrohydraulic actuators. Stability augmentation also positions the rudder, through the rudder actuator, in response to aircraft side acceleration.

ATTITUDE HOLD MODE

The attitude hold mode is the basic, hands-off mode of operation. While operating in this mode, the pilot may, if he desires, initiate roll and pitch maneuvers using the aircraft control stick. (This operation is actually a submode of operation within the major mode and is described later.) Three-axis damping is also provided while operating in the attitude hold mode.

The rudder (yaw) axis is controlled in this mode in the same manner as it is in the stability augmentation mode.

The stabilizer (pitch) axis maintains the reference pitch attitude and furnishes continuous automatic pitch trim. Pitch attitude hold is accomplished by commanding stabilizer position proportional to pitch attitude (rate and displacement) from an established reference attitude. The rate signal is derived from a pitch rate gyro, and the displacement signal is received from the inertial navigation system (INS). These signals position the stabilizer through the stabilizer electrohydraulic actuator. Automatic pitch trim is accomplished by repositioning the cockpit control column and linkage to establish the trimmed stabilizer position. The AFCS senses sustained electrically held surface position and repositions the control column and linkage through the electromechanical trim actuator, thereby eliminating the requirement for sustained electrical input.

In the operation of the flaperon (roll) axis, there are two possible configurations under control of the AFCS–roll attitude hold and heading hold. Roll attitude hold is accomplished in the same way as pitch attitude hold, with the flaperon being positioned as a function of roll rate gyro and INS roll attitude error information. In order for the AFCS to assume the roll attitude hold configuration, the aircraft bank angle must be greater than 5° when the attitude hold mode is selected. If the bank angle is less than 5° when this mode is selected, the aircraft is automatically leveled and the heading hold mode is engaged. The reference heading is maintained by commanding bank angle as a function of heading error. The heading error signal is derived from the aircraft's inertial navigation system. The actuator positions the flaperon through linkage and through the flaperon power actuators.

With the AFCS in the attitude hold mode, the pilot can initiate roll and pitch maneuvers using the aircraft control stick. Force-sensitive disconnect switches within the control stick cause the AFCS to revert to the stability augmentation mode when control stick force is applied. The attitude hold mode is automatically reengaged when the aircraft maneuver is completed.

When the stick is moved laterally out-of-detent, the roll damper signal is removed from the AFCS. The roll rate signals are removed by an easy engage circuit within the AFCS for the duration of the laterally applied force. Removal of the roll damper signal eliminates damper resistance to the command roll rate. When the stick is returned to lateral detent, the roll damper signal is reapplied

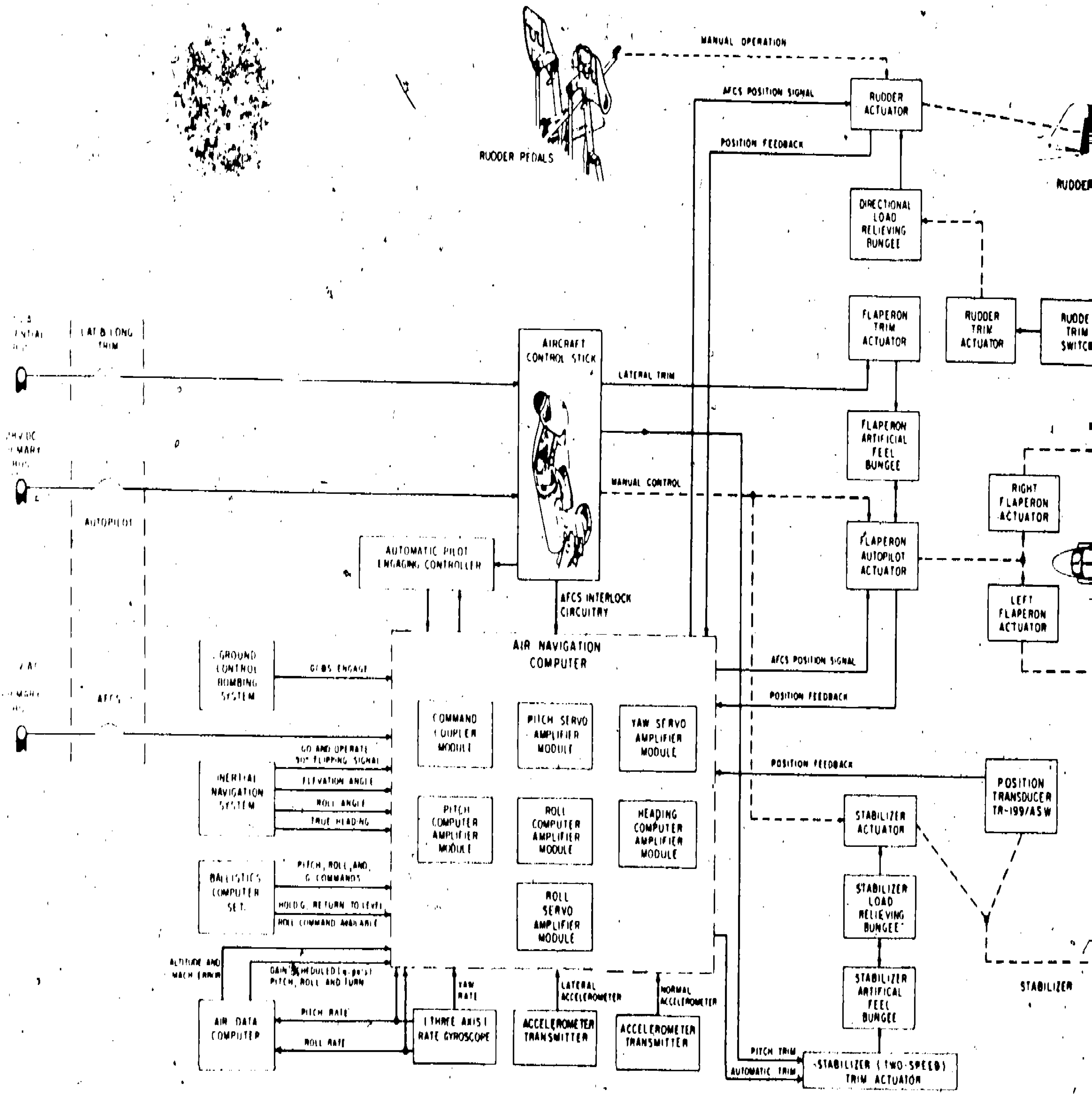

Figure 7-1.—AFCS AN/ASW-16 block diagram.

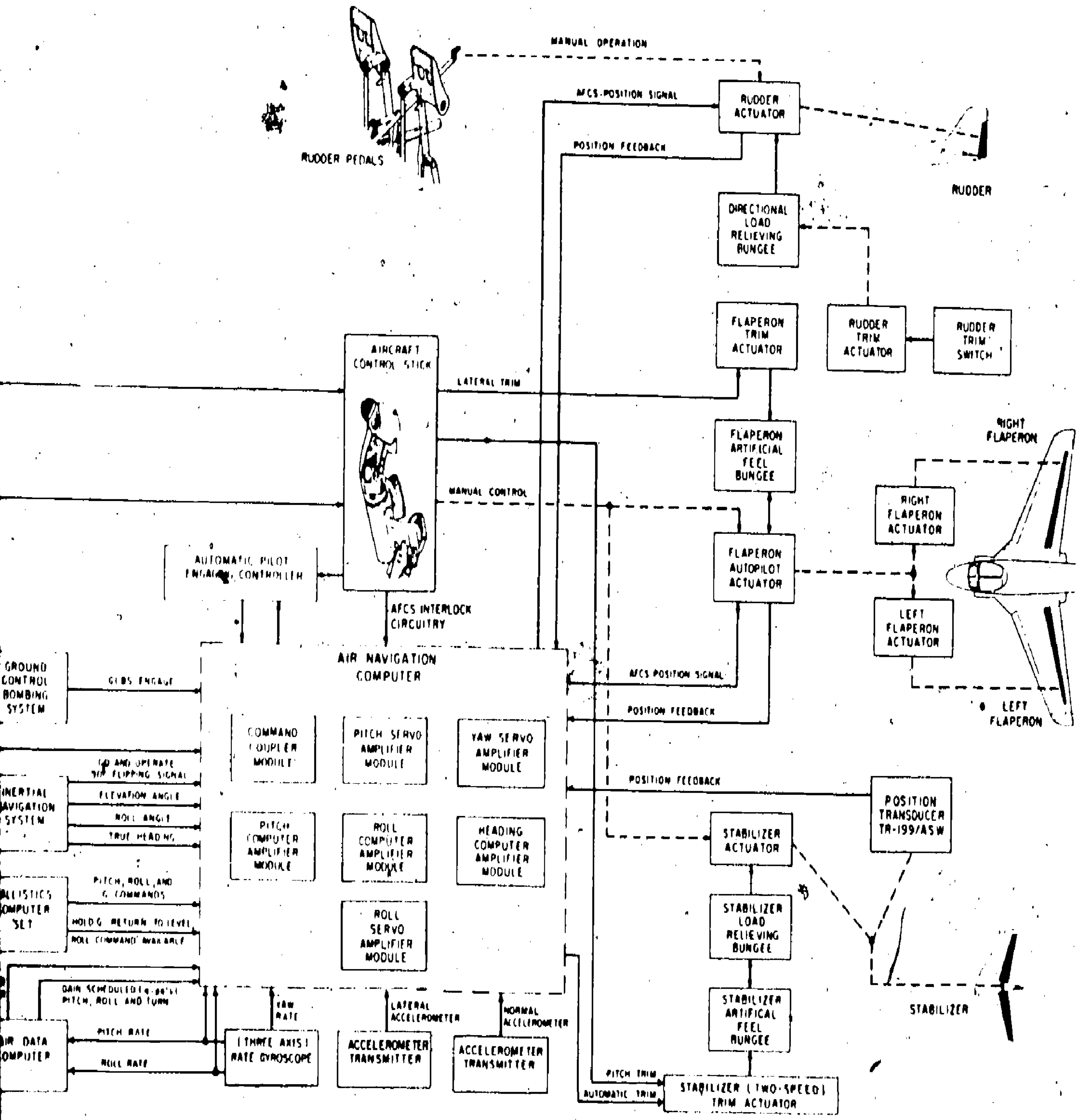

208.138

Figure 7-1.—AFCS AN/ASW-16 block diagram.

smoothly to the desired level through the AFCS easy engage circuit.

ALTITUDE HOLD MODE

Automatic barometric altitude hold is accomplished by commanding pitch attitude proportional to displacement and rate deviations from the reference altitude. In addition, sustained altitude errors are corrected by integration of the displacement error. The displacement signal (derived from a clutched synchro in the aircraft air data computer), the rate signal (derived through integration of the accelerometer transmitter signal—normal acceleration), and the integrated displacement signal are summed and used to command aircraft pitch attitude in the sense that reduces the altitude error. The stabilizer is positioned by the electrohydraulic stabilizer actuator.

MACH HOLD MODE

Mach hold is accomplished by commanding aircraft pitch attitude that reduces Mach error in the same manner as altitude error is reduced in the altitude hold mode. The displacement signal is derived from a clutched reference synchro in the air data computer. Sustained Mach errors are corrected by integration of the displacement error, and vertical path damping is provided through integration of the normal accelerometer transmitter signal.

RETURN-TO-LEVEL MODE

The return-to-level mode is manually selected by the pilot (or automatically commanded by the ballistic computer in the command mode) in any attitude, provided the system interlock functions are satisfied. Manual selection of this mode of control results in the following programmed sequence:

1. Disconnect roll attitude hold, and level the aircraft in roll.
2. Engage heading hold when the bank angle is reduced to 5°.
3. Disconnect pitch attitude, altitude, or Mach hold, and level the aircraft in pitch.
4. Engage pitch attitude hold when pitch angle is between 3° and 7° nose up.

TPQ-10 MODE

This mode of operation is manually selected by means of the TPQ-10 engage switch on the ground controlled bombing system (GCBS) control panel. Steering command signals are generated by the heading computer module of the air navigation computer in response to signals transmitted from the ground data link transmitter to the aircraft radio receiver. The resulting heading error signal is reduced to zero by commanding bank angle as a function of heading error (as in heading hold), thus changing the aircraft heading in response to ground commands.

COMMAND MODE

In the command mode of operation, fully automatic hands-off control of the aircraft is achieved by the AFCS in response to programmed ballistic computer set inputs. The ballistic computer provides steering error inputs in the form of roll commands (limited to ±30°), velocity inputs, and normal-acceleration-monitored g-command inputs. (Pitch commands may be inserted with the pitch axis in the attitude, altitude, or Mach hold configuration.) Closed loop g-control is achieved in the AFCS by comparing the g-command signal with the normal accelerometer transmitter signal. This error signal is integrated and used to command stabilizer position. In the command mode, the AFCS has the additional capability of accepting roll and pitch commands from an airborne data link for automatic landing system (ALS) operation.

FUNCTIONAL OPERATION OF SYSTEM COMPONENTS

The automatic flight control system consists of the air navigation computer, an automatic pilot engaging controller, rate gyros, a positioning transducer, the aircraft control stick,

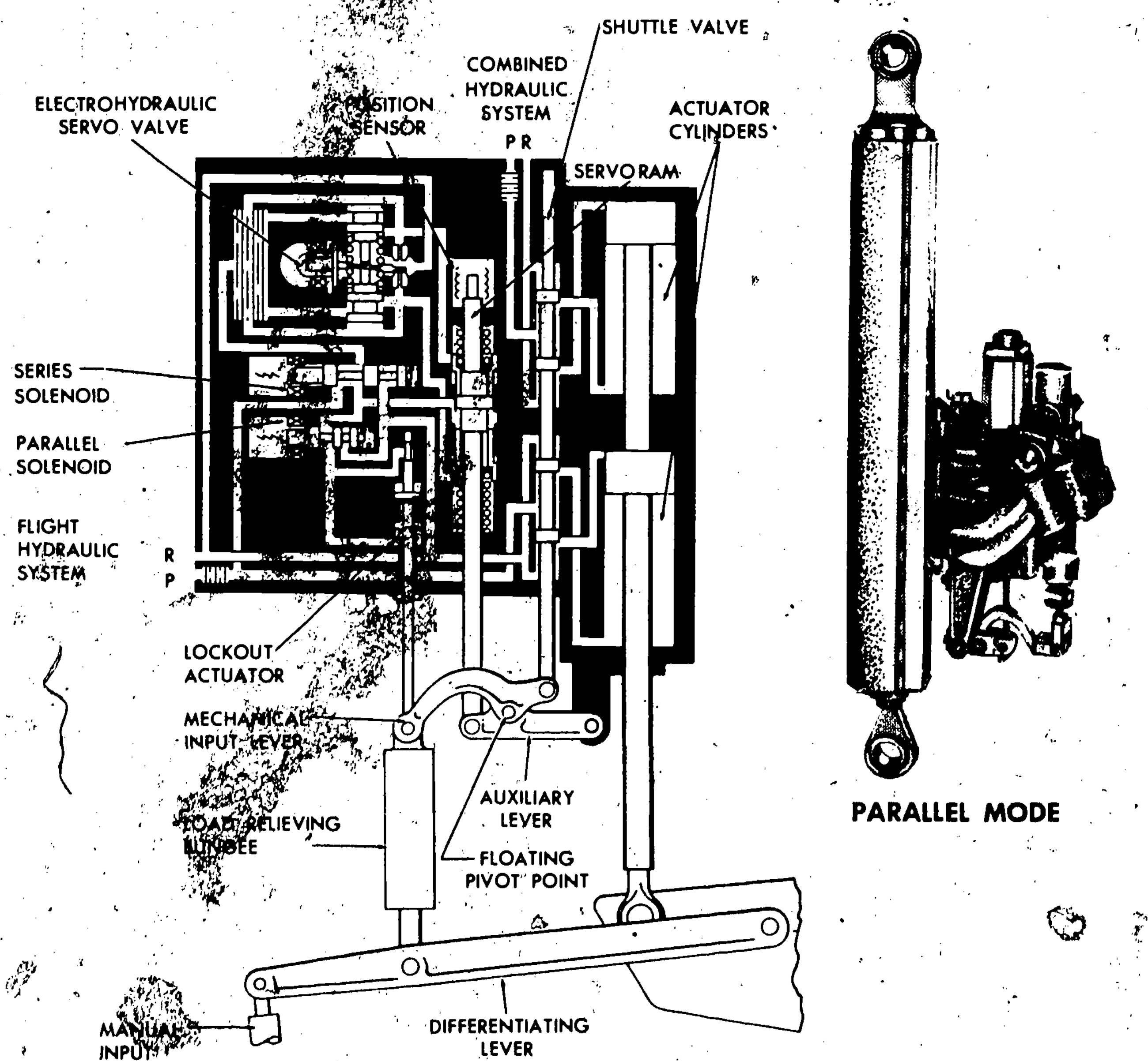

208.139

Figure 7-2.—Stabilizer actuator.

and control surface actuators. Although the navigation computer is the major system component, it is described last since inputs to the computer come from many of the other system components. By giving a description of the other components first, it should be easier to understand the operation of the computer.

ACTUATORS

The actuators in the system can be divided into three groups—stabilizer actuator group, flaperon actuator group (consisting of flaperon actuator and flaperon autopilot actuator), and rudder actuator group. Except for the autopilot actuator, each of the actuators is a tandem arrangement of two double-acting power pistons mounted on a common rod. Each of the actuators is discussed under the appropriate heading.

Stabilizer Actuator

The stabilizer actuator (fig. 7-2) controls the movement of the stabilizer in response to mechanical commands from the pilot and to electrical commands from the AFCS. A valve section on the cylinder housing contains two tandem power valves (shuttle valves) that meter flow from two separate hydraulic systems to the cylinders. The valve section includes the power (shuttle) valves, electrohydraulic servo valve, series (mode) and parallel (mode) solenoid valves, servo ram, auxiliary lever, and mechanical input lockout pistons. The stabilizer actuator operates in three modes—manual, series, and parallel.

In the manual mode, the pilot's movement of the control stick controls the shuttle valve, which ports hydraulic fluid to the actuator cylinders.

When the stabilizer actuator operates in the series mode, the series solenoid valve is controlled from the automatic pilot engaging controller. In the series mode of operation, input signals from the AFCS may be used independently or summed with the control stick movement to position the stabilizer.

When the stabilizer actuator operates in the parallel mode, both the series and parallel mode valves are energized. As in the series mode, electrical signals from the AFCS operate the electrohydraulic servo valve, which drives the shuttle through the servo ram, auxiliary lever, and mechanical input lever. Inner loop feedback is again accomplished by the position sensor on the servo ram shaft. Since the mechanical input point is locked, stabilizer movement produces no mechanical feedback to the valve. The outer loop feedback is accomplished electrically by means of the position sensor. This unit is mechanically linked to the stabilizer actuating arm to sense motion of the stabilizer. During manual and series operation, an electric clutch disengages the position sensor and centering springs hold its rotor in the null position. When the valve input point is fixed, motion of the stabilizer actuating arm drives the control linkage, and the pilot's control stick follows surface position. Full surface authority is available in this mode of operation.

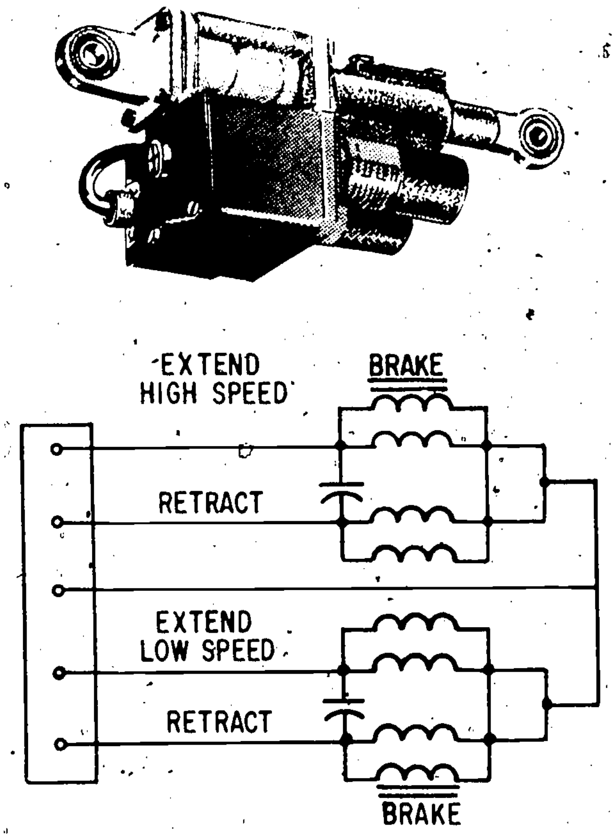

208.140

Figure 7-3.—Trim actuator.

STABILIZER TRIM ACTUATOR.—Two modes of trim actuator operation are provided—a high-speed manual mode and low-speed AFCS mode. The two-speed actuator (fig. 7-3) consists of two 120-volt, 400-Hz, single-phase motors, a motor brake, gearbox, and screwjack. A ball-detent slip clutch is also included to prevent excessive actuator loading.

High speed operation of the actuator is controlled by the manual trim button located on the aircraft control stick. Low speed operation is controlled by the automatic pitch trim circuitry of the AFCS. The motor and gearing associated

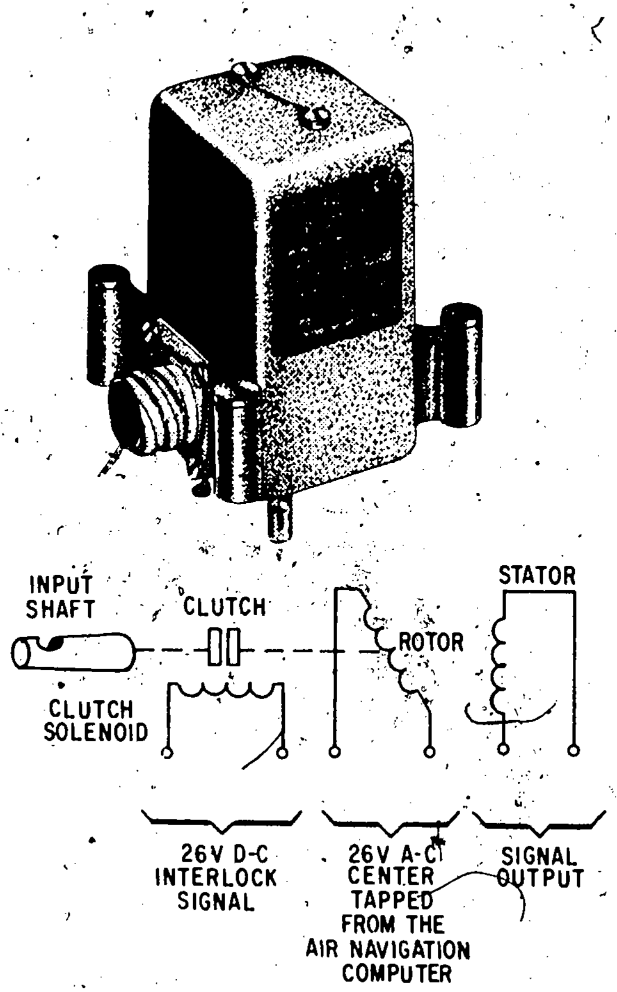

208.141

Figure 7-4.—Position transducer.

with the automatic circuitry drive the actuator at a trim rate that is approximately one-twentieth the manual rate. The slower rate for automatic trimming is required for stable system operation.

The actuator output moves the control stick through an artificial feel bungee. Adjustable stops incorporated in the screwjack sleeve of the actuator provide mechanical adjustment.

The brake assembly, which is an integral part of each motor, is released upon application of power to the motor.

POSITION TRANSDUCER.—The position transducer (fig. 7-4) is a linear transducer that transmits stabilizer position to the AFCS when the stabilizer actuator is operating in the parallel mode. The transducer contains a linear transformer, a mechanical recentering device, an electromechanical clutch, a gear train, and an input shaft. The transducer input shaft is mechanically linked through adjustable linkage to the stabilizer.

Input shaft rotation is transmitted through a clutched gear train to the rotor windings of the linear transformer. The dc operated clutch and the parallel solenoid of the stabilizer actuator are simultaneously energized through the AFCS interlock circuitry. The rotor excitation voltage (26 volts ac) is centertapped from the air navigation computer. Rotation of the transformer rotor induces a signal in the stator windings that is proportional to stabilizer position. The stator output signal is fed back to the stabilizer AFCS servo loop. A centering spring within the transducer returns the rotor to the electrical zero position when the clutch is deenergized. Rotation of the input shaft with the clutch deenergized does not affect transducer operation.

Flaperon Actuator

Each flaperon actuator (fig. 7-5) is a tandem arrangement of two double-acting power pistons mounted on a common rod. A valve section on the cylinder housing contains two tandem power valves that meter flow from separate hydraulic systems to the cylinder. Inputs are introduced at the valve shuttle from the flaperon gearing mechanism through the load relieving bungee unit. This actuator is similar in design and function to the stabilizer actuator.

Flaperon Autopilot Actuator

The flaperon autopilot actuator (fig. 7-6) controls the movement of the flaperons in response to mechanical commands from the pilot and to electrical commands from the AFCS. The flaperon autopilot actuator consists of a series mode solenoid valve, electrohydraulic servo valve, actuator pistons and rod, series link with transducer; and input and output levers. The actuator operates in two modes—manual and series.

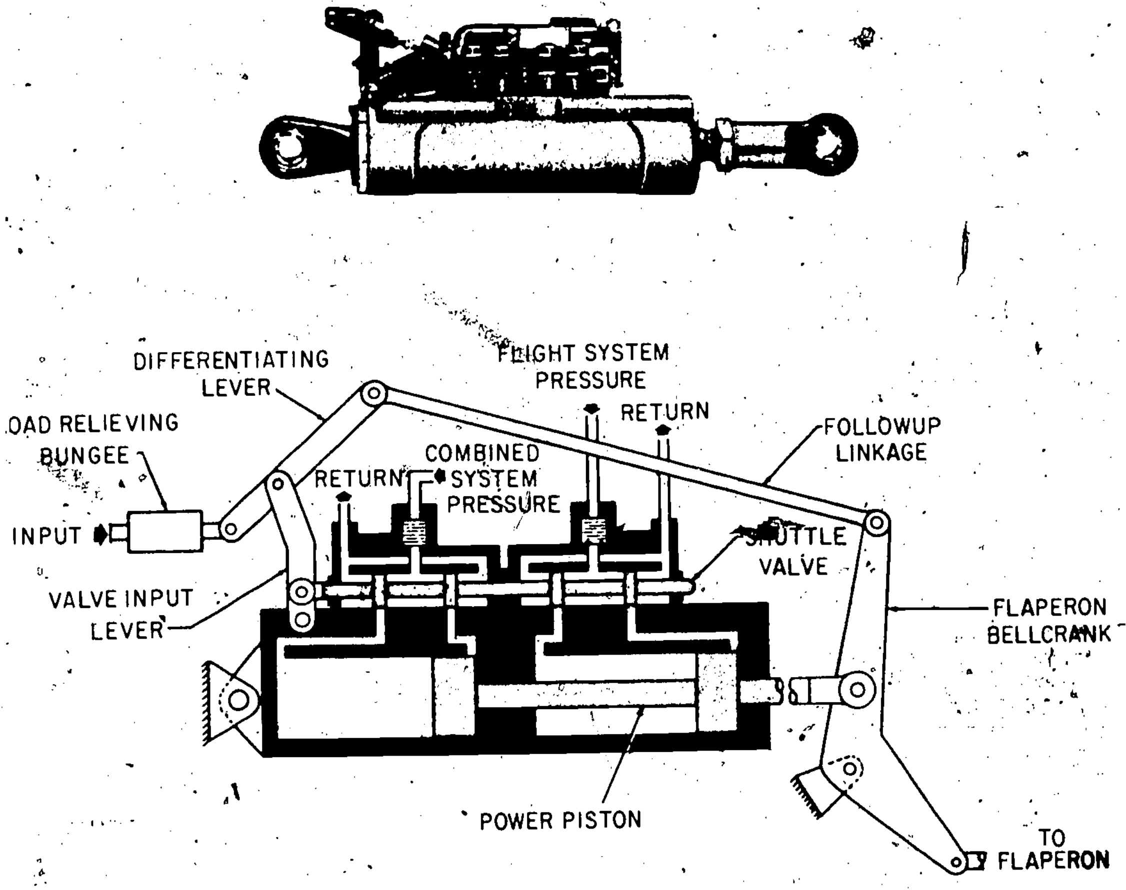

208.142

Figure 7-5.—Flaperon actuator.

In the manual mode, the series mode solenoid valve is deenergized, and no fluid is ported to any portion of the actuator. The series link cylinder contains two spring-loaded pistons that clamp to the series link rod when hydraulic pressure is removed. The entire series link then becomes a rigid connection between the input and output levers. Input motions from the control stick are then transferred directly from the input lever to the output lever through the series link. The actuator piston rod is free to idle in this mode and is supported by bearings to minimize friction.

When operating in the series mode, the series mode valve is energized from the AFCS cockpit controller. This ports hydraulic system pressure to the electrohydraulic servo valve, the actuator cylinder, and the series link.

Rudder Actuator

The rudder actuator (fig. 7-7) is similar in design and function to the stabilizer and flaperon actuators. A valve section on the cylinder housing contains two tandem power valves that meter flow from the separate hydraulic systems to the cylinders. The assembly includes a power shuttle valve, electrohydraulic servo valve, series (mode) solenoid valve, servo ram, and mechanical input and differentiating levers. This actuator operates in two modes—manual and series.

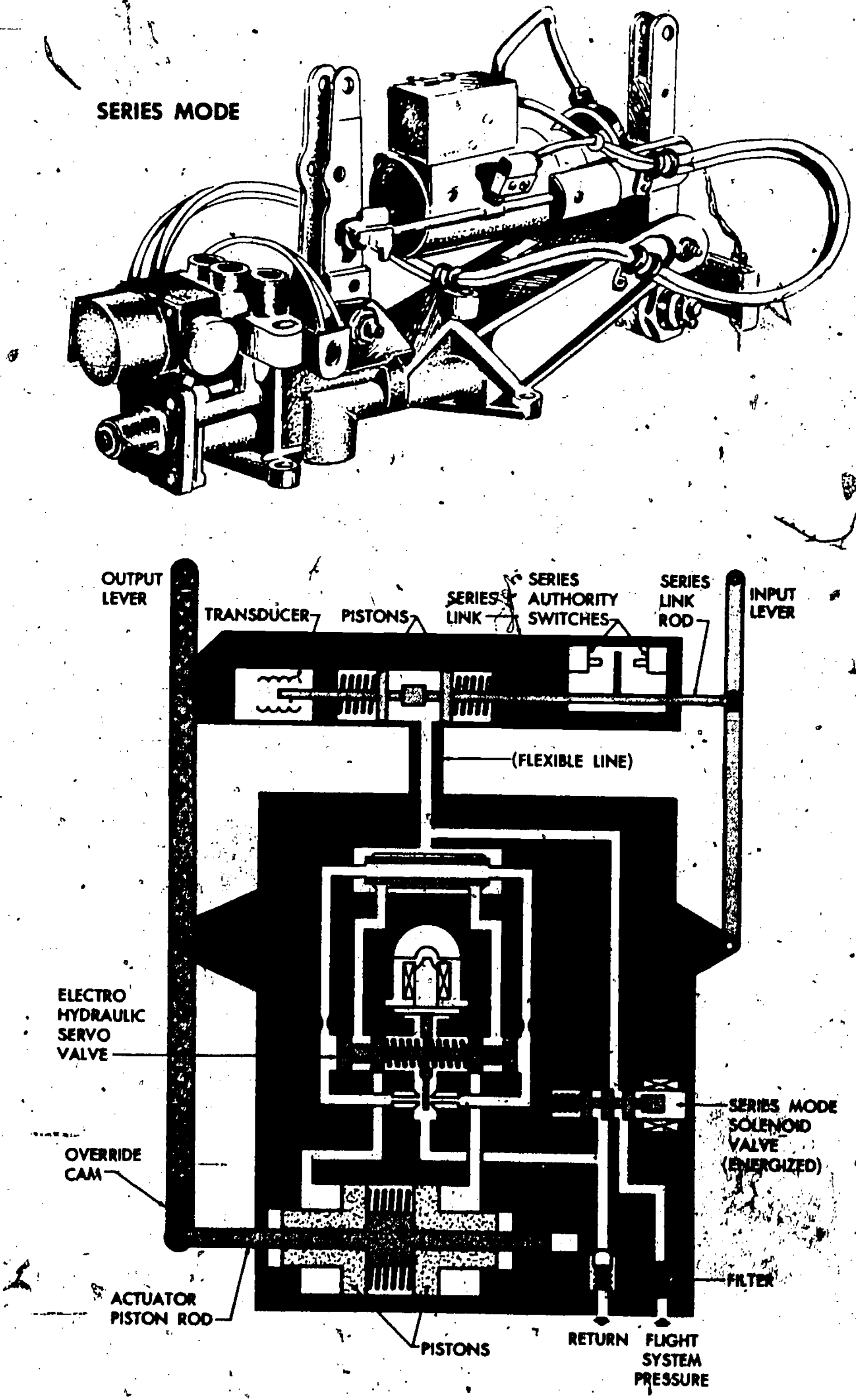

208.143

Figure 7-6.—Flaperon automatic pilot actuator.

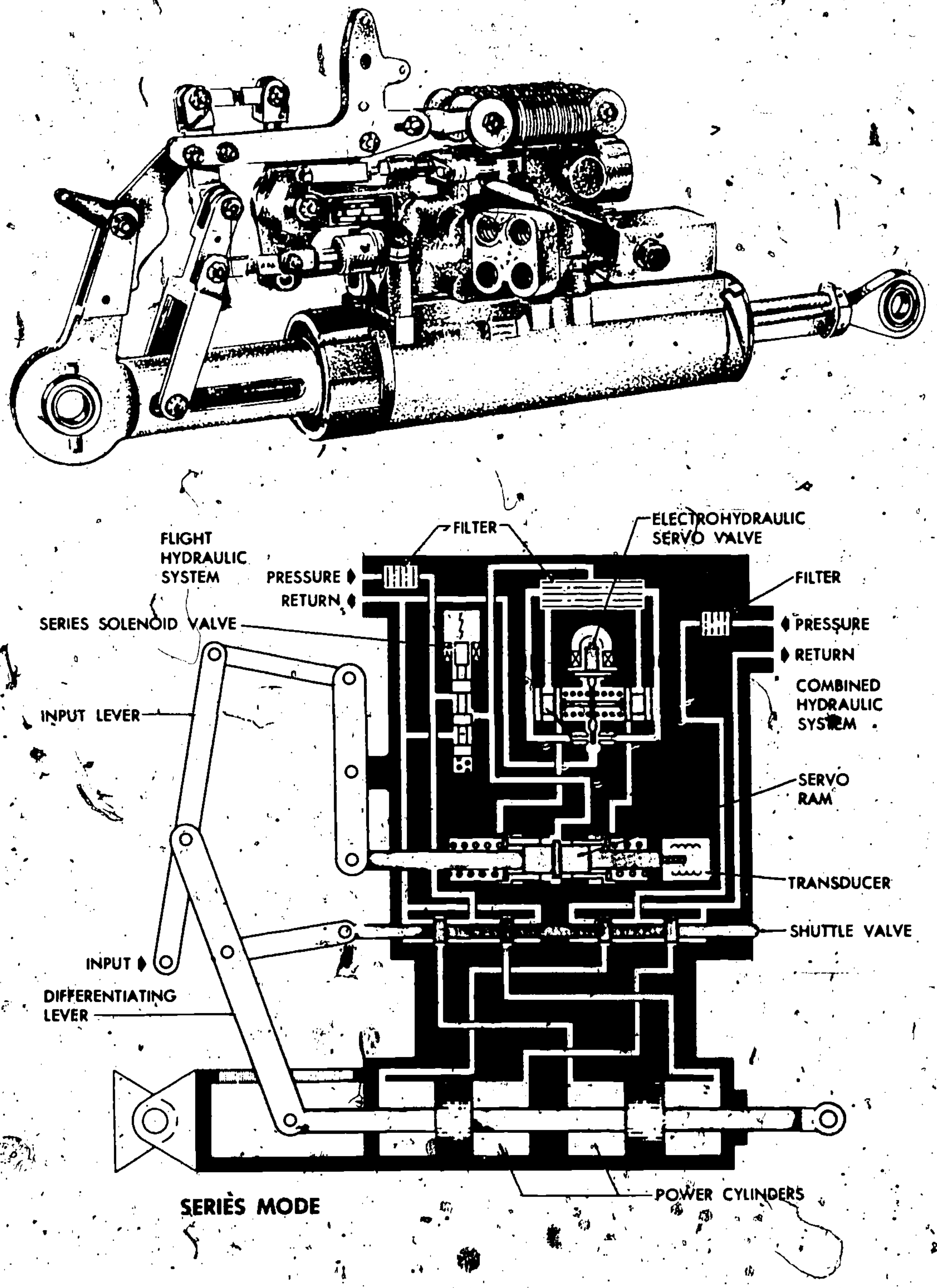

208.144

Figure 7-7.—Rudder actuator.

When operating in the manual mode, the series (mode) solenoid valve is deenergized and no fluid is ported to the servo valve or the servo ram. Centering springs hold the servo ram at neutral, thereby fixing the position of the auxiliary link. Rudder-pedal motion is introduced through the input lever to the shuttle valve to port hydraulic fluid to the power cylinders. A differentiating lever sums the rudder position with the rudder-pedal position to stop the rudder at the desired position.

A cam stop arrangement (not shown) limits rudder movement to ±4° displacement from neutral for clean flight configuration (wheels and flaps up). These stops are on the actuator and act on a roller on the input lever to the shuttle valve. Since this lever represents the summing point for the rudder-pedal and the AFCS inputs, the total rudder motion due to both rudder-pedal and AFCS inputs cannot exceed the 4° limit.

When operating in the series mode, the energized series solenoid valve ports pressure to the electrohydraulic servo valve and to the unlock section of the servo ram. Electrical signals from the AFCS are applied to the coils of the torque motor in the servo valve. Hydraulic pressure from the servo valve varies with the differential current input. This pressure drives the servo ram, which is connected through intermediate links to the differentiating lever. This lever sums servo-ram inputs with rudder-pedal inputs, introducing an error signal at the shuttle valve, through the input lever. This displacement ports hydraulic flow to move the piston rod, in turn reducing the error to zero through the differentiating feedback link.

A transducer on the centerline of the servo ram provides servo-ram-position information to the AFCS. The series mode authority of the AFCS is ±4° of rudder motion from the pilot-commanded position. In the clean configuration, this authority is restricted to a maximum of 4° from neutral by the cam stop.

A summary of the electrohydraulic actuator operation, tying together actuator and AFCS operating modes, is shown in table 7-1.

177

SENSORS

The AFCS receives error or correction signals from the sensors (auxiliary and AFCS) for flight stabilization, attitude hold, and flight-path control. (See fig. 7-8.)

The AFCS signal coupling channels amplify, shape, and mix the error and correction signals to provide a proportional deflection of each of the aircraft control surfaces. The control system, divided into the AFCS servosystem and the aircraft control system, provides the electrohydraulic and mechanical coupling to deflect each control surface. The AFCS servosystem provides electrohydraulic power amplification of the shaped error and command information for each aircraft control axis. Each aircraft control system (hydraulic power actuator and control linkages) is proportionally driven by the output of the appropriate AFCS servosystem or through linkages from the pilot's manual inputs (stick or rudder pedals).

The AFCS sensors consist of the following components:

1. Lateral accelerometer.
2. Normal accelerometer.
3. Roll rate gyro.
4. Yaw rate gyro.
5. Pitch rate gyro.

In addition to the AFCS sensors, the system receives inputs from auxiliary sensors, which consist of the following:

1. Ballistic computer set.
2. Inertial navigation system.
3. Air data computer.
4. Ground controlled bombing system.

Rate Gyroscope

Aircraft yaw, pitch, and roll rates are detected and measured by rate gyroscopes. These rate data are supplied to the air navigation computer for three-axis damping. The rate sensing device for each of the three axes consists of a miniature rate gyro (fig. 7-9). Roll rate gyro B1, pitch gyro B2, and yaw rate gyro B3 are physically identical, integral assemblies. They differ only in respect to calibration, alignment,

Table 7-1.—Summary of actuator operations

AFCS Mode of operation	Actuator operation			Actuator manual inputs		
	Stabilizer	Flaperon autopilot	Rudder	Stabilizer	Flaperon autopilot	Rudder
Stability augmentation	Series	Series	Series	Control stick	Control stick	Rudder pedals
Attitude hold	Series	Series	Series	The axes revert to AFCS control on release of the control stick or by controller switching.		(None)
Altitude hold	Series	——	——			
Mach hold	Series	——	——			
Return to level	Parallel	Series	Series			
Command	Parallel	Series	Series			
Ground controlled	Series	Series	Series			
Bombing (TPQ-10)	Series	Series	Series			

range, sensitivity, and natural frequency. Each gyro measures angular rate by the proportional precessional torque generated by the rate of movement about the gyro input axis.

Internally, each rate gyro consists of a small viscous-damped, single-degree-of-freedom gyro (stator, rotor, and gimbal) with a differential transformer pickoff. The gyroscopic element of each gyro is the spherical rotor of a synchronous motor. The rotor is mounted in a gimbal frame and is spun at high speed about its spin axis. The gimbal is flexible and is free to rotate about an output axis which is perpendicular to both the spin axis and the input axis. The rotational freedom about this axis is limited by a torsion restoring spring that couples the gimbal to the case. Between the gimbal and case is a viscous damper. The gyro gimbal also carries the pickoff rotor on an extension along its output axis. The pickoff senses the relative angular displacement of gimbal and case.

The schematic representation of each rate gyro (B1, B2, and B3) is shown in figure 7-9. The stator windings of the motor receive 26-volt, 400-Hz, single-phase excitation. Since the gyro motor is operated from single-phase voltage, its leading motor phase is connected to the excitation supply through a 1.0-microfarad capacitor (C1, C2, and C3). The pickoff primary is excited with voltage from the motor excitation through choke L1. This choke compensates for pickoff gain changes produced by excitation frequency and by temperature variations. It also reduces the effect of harmonic distortion in the excitation supply.

With the pickoff rotor in its zero or neutral position, the mutual inductance is zero; a current flowing in the pickoff primary causes essentially no voltage in the secondary (output) winding. As the pickoff rotor is turned one way or the other by gyro gimbal deflection about its output axis (due to the laws of gyroscopic precession), a proportional mutual inductance (positive or negative, depending upon the direction of deflection from neutral position) is introduced. Hence, a voltage proportional to this mutual inductance is produced in the pickoff secondary due to a current flowing in its primary. The output voltage is proportional to the aircraft's angular velocity input to the gyro in the particular axis. For calibration, resistor R1 and capacitor C4 are connected across the roll rate gyro output (resistor R2 and capacitor C5 and connected similarly for the pitch rate gyro, and resistor R3 and capacitor C6 for the yaw rate gyro).

Accelerometer Transmitter

Two accelerometers are used in the AN/ASW-16 AFCS—the lateral and normal.

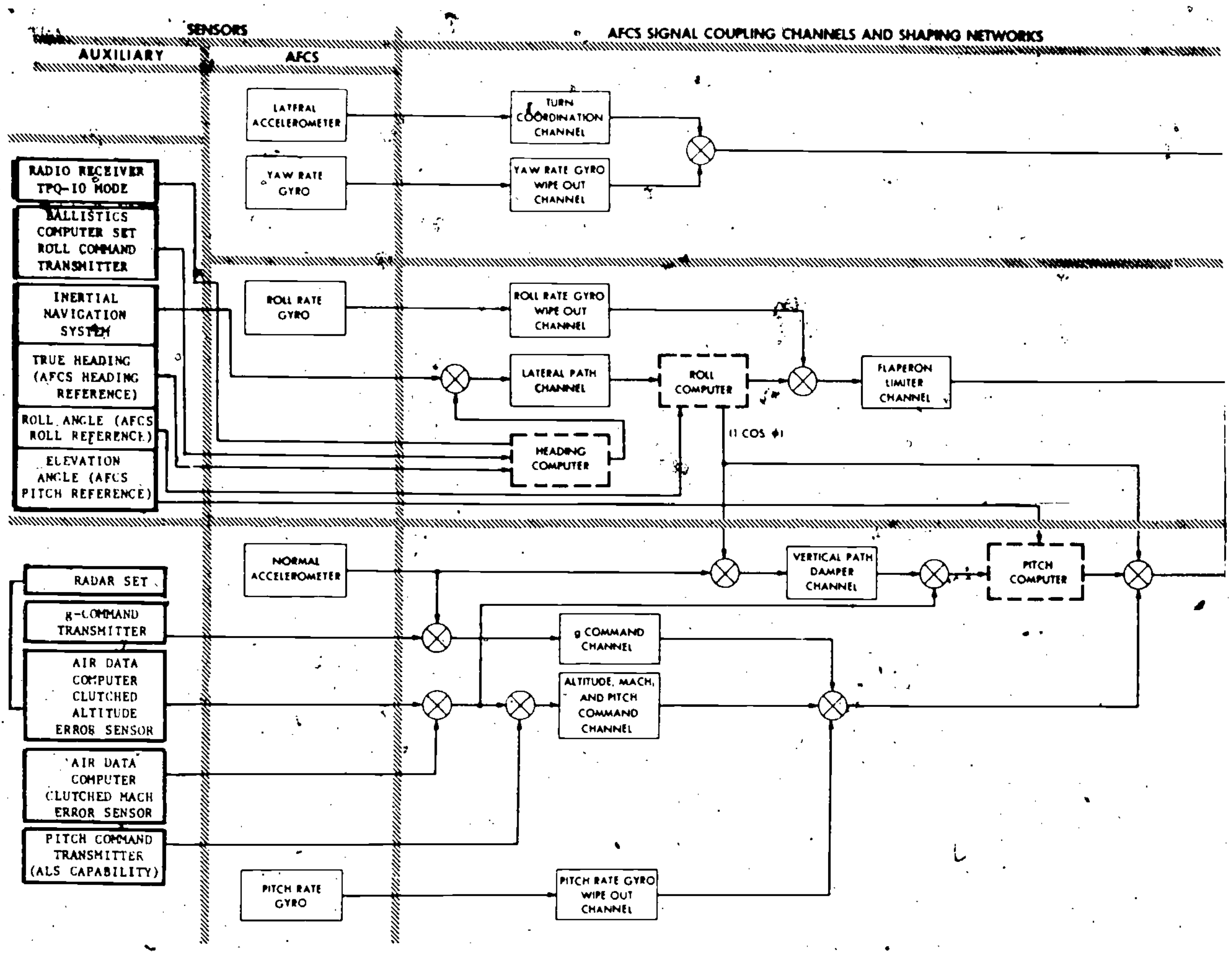

208.145

Figure 7-8.—AFCS simplified schematic diagram.

accelerometers. The lateral accelerometer generates a signal proportional to aircraft lateral acceleration and is used for turn coordination. The normal accelerometer generates a signal proportional to the normal (vertical) acceleration that is used for altitude or Mach hold vertical path damping, and also as the g-command reference. The two accelerometers are physically the same, and their operation is identical. Therefore, only the lateral accelerometer is discussed.

The lateral accelerometer is shown in figure 7-10(A). A cutaway view of the lateral accelerometer is shown in figure 7-10 (B). The unit consists of a cast housing assembly, a sensitive element assembly, bellows, and calibration resistors (R51, R52, and R53). The sensitive element assembly has an E-pickoff, an armature and armature support, flexure springs, and a backplate. The sensitive element assembly and bellows are sealed inside the housing, which is filled with damping fluid. The damping fluid provides viscous damping during motion of the armature. The lateral accelerometer is calibrated by means of null shift and range adjustments, selected resistors (R52 and R53), and variable resistor R51.

The E-shaped core of the E-pickoff (fig. 7-10 (C)) has an excitation winding (winding A) and a compensation winding (winding B) on the center

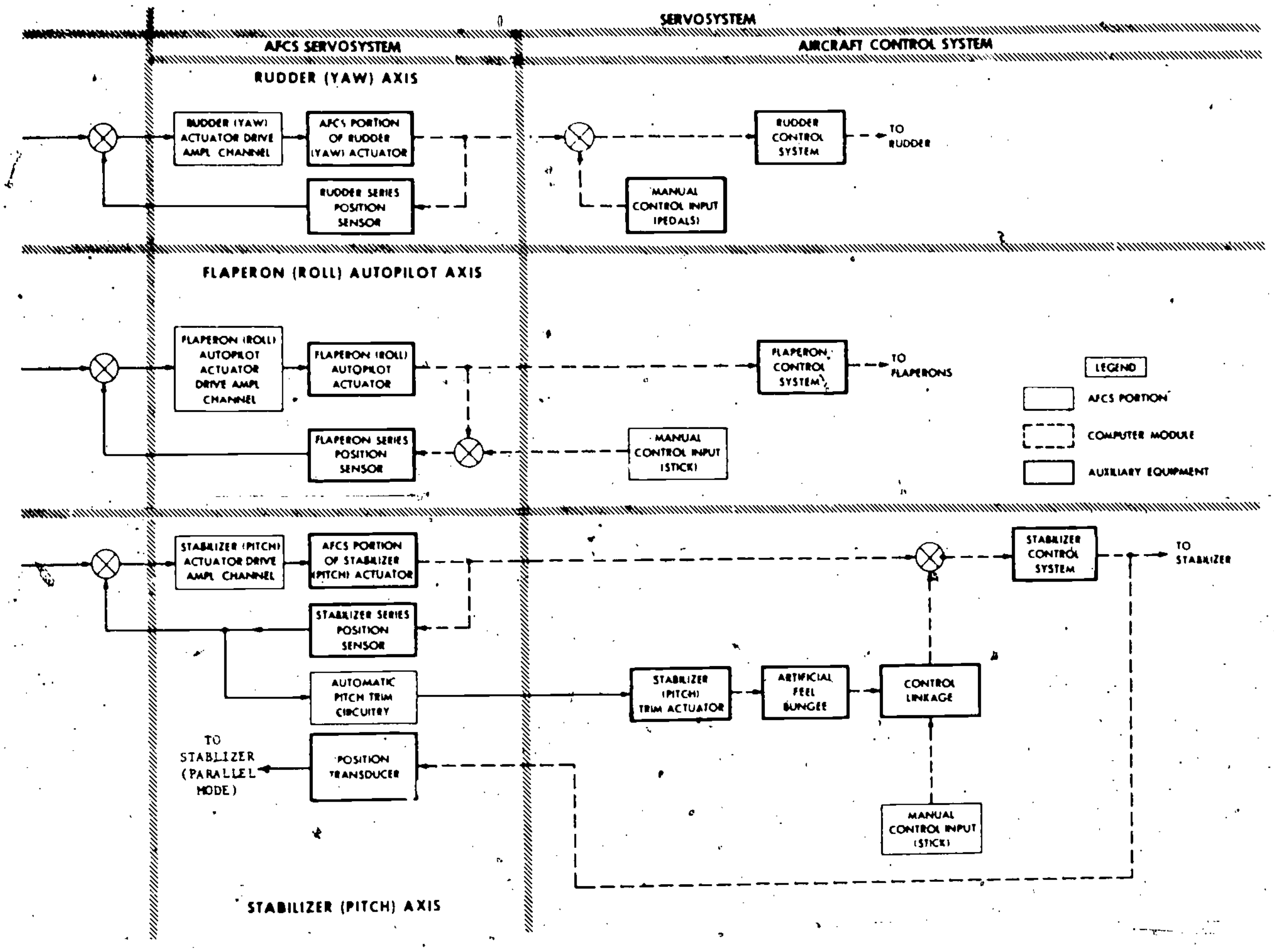

208.145.1

Figure 7-8.—AFCS simplified schematic diagram—Continued.

leg, and a signal output winding (coils A and B) on each of the outer legs.

Excitation voltage (120-volt, 400-Hz, single-phase) is applied to winding A (in series with resistor R52). The signal output windings (coils A and B), differentially connected to yield a null output under static (zero g) conditons, produce a phase-sensitive output acceleration signal.

As the aircraft accelerates in the sensitive (lateral) direction, the suspended armature tends to remain behind due to its inertia, thus varying the reluctance of the magnetic circuit set up by the E-pickoff windings and armature. The armature completes the magnetic circuit through a small airgap. The relative motion between the armature and E-pickoff varies the reluctance through the signal output windings, which results in a signal that is proportional to acceleration. In operation, the output voltage is either in phase or 180° out of phase with the excitation, depending on the direction of acceleration.

AIRCRAFT CONTROL STICK

The aircraft control stick (fig. 7-11(A)) is composed of a handle (pilot grip) and cable assembly and a transducer housing. The handle and cable assembly contain the following

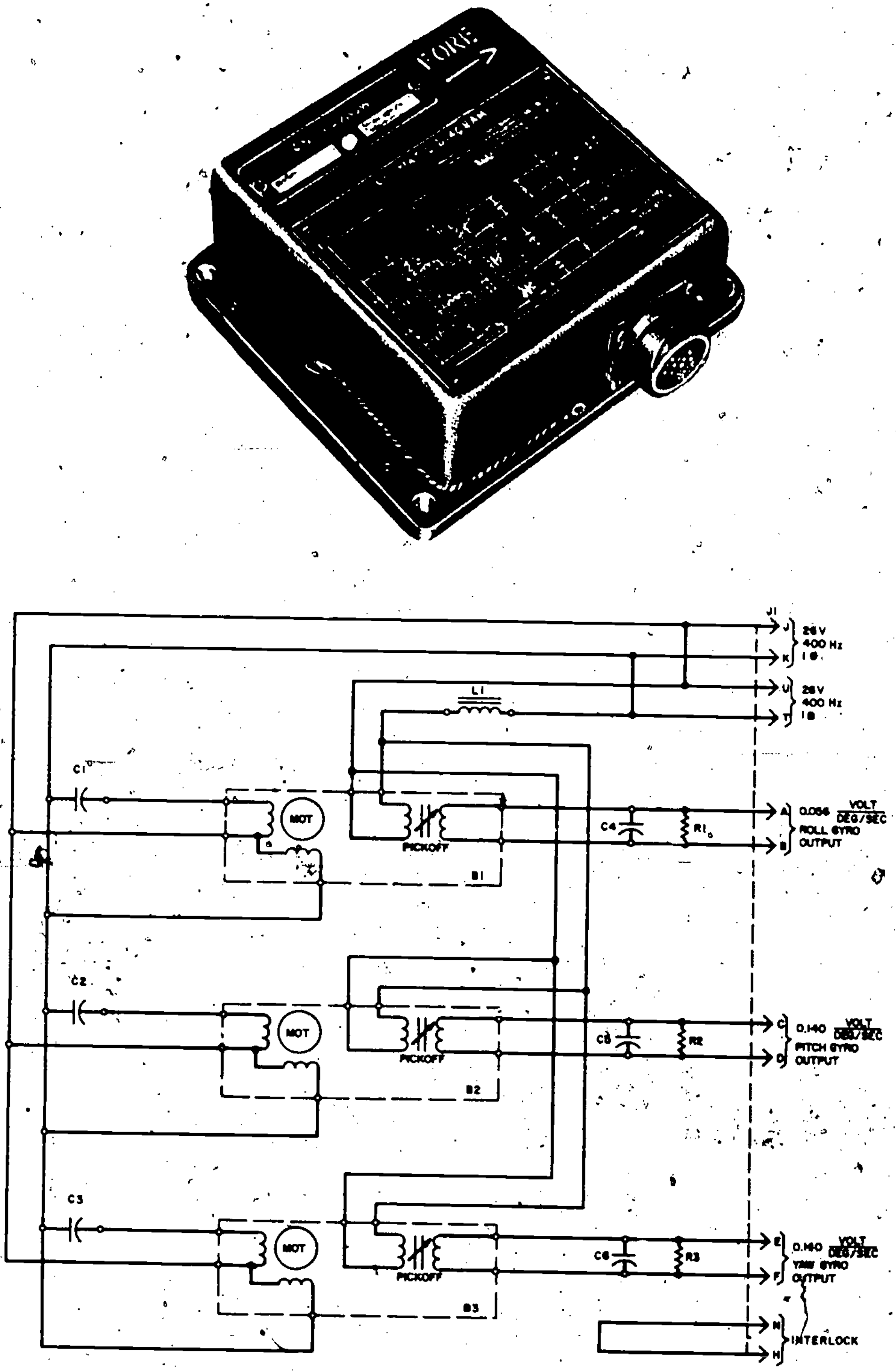

208.147

Figure 7-9.—Rate gyroscope.

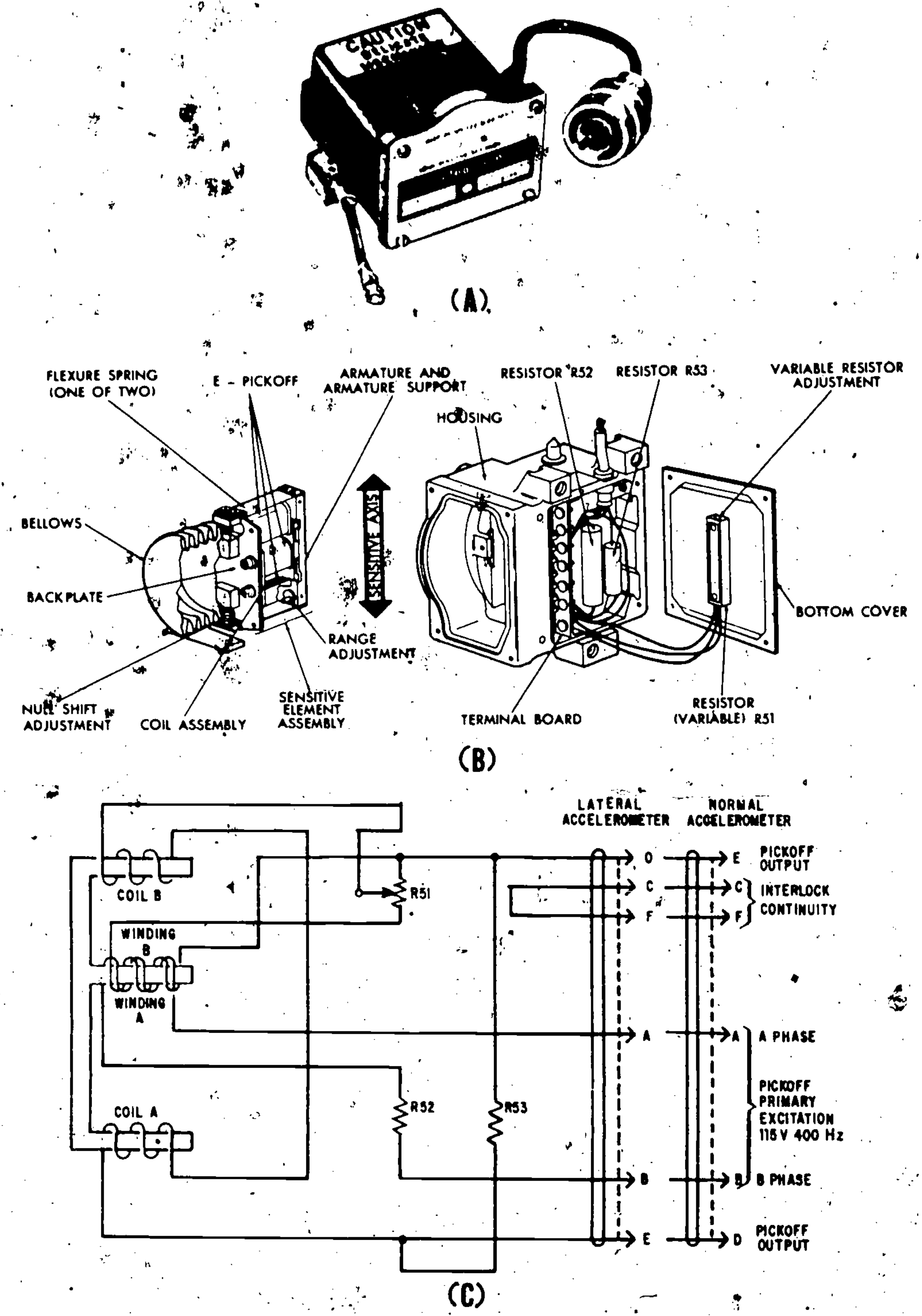

208.148

Figure 7-10.—Lateral accelerometer.

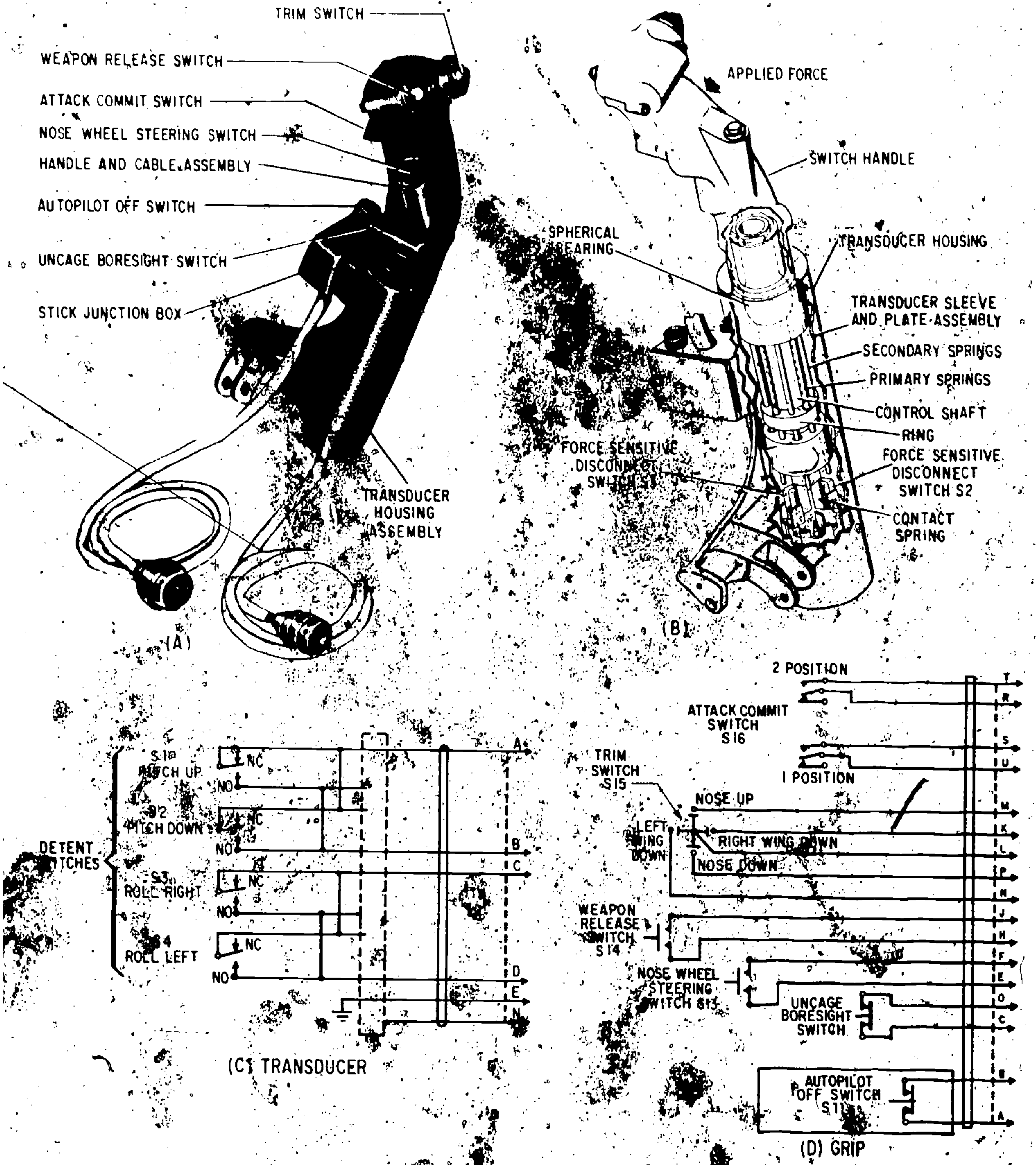

208.149

Figure 7-11.—Aircraft control stick.

switches: nosewheel steering, weapon release, trim, attack commit, uncage boresight, and autopilot off. Roll and pitch control forces, applied by the pilot, are transmitted to the aircraft control linkage via the transducer. The stick provides the pitch and roll switching for control stick steering.

The operating parts of the aircraft control stick are shown in figure 7-11 (B). A spherical bearing at the top of the transducer permits moving the handle in any direction with respect to the transducer housing. Moving the handle in one direction causes a shaft to move in the opposite direction. The shaft is held in central position by means of four rod-shaped primary springs. Bearing against the lower end of the shaft are four switch actuators.

Moving the handle beyond the detent force position causes the shaft to contact a ring holding four secondary springs. If the applied force is increased further, movement is communicated to the transducer sleeve and thence through the transducer housing to the control column.

The shaft and associated parts are of sufficient weight to counterbalance the handle about the spherical bearing. Assume that a force is applied to the handle for pitchdown action as shown in figure 7-11 (B). The shaft acts through a switch actuator to close switch S2, thereby providing a pitchdown interlocking system disconnect signal. Further movement of the handle, beyond the limit of the transducer mechanism, causes movement of the control column. If the pilot pulls the stick toward him, a switch (located opposite S2) is closed, providing a pitchup interlocking signal. When the force is removed from the handle, the shaft is returned to central position by the spring action. If the pilot forces the handle to the left, a switch is closed for a left-roll interlock signal. If the stick is moved to the right, a switch is closed for a right-roll interlock signal.

The two pitch disconnect switches (S1, pitchup; S2, pitchdown, fig. 7-11 (C)) are both single-pole, double-throw switches. With no force applied to the stick, an open circuit exists between terminals A and B. When a force (pitchup or pitchdown) equivalent to or greater than 1.1 ± 0.2 pounds is applied to the stick, continuity exists between terminals A and B.

The two roll disconnect switches (S3, roll right; S4, roll left) are similar. With no force applied to the stick, an open circuit exists between terminals C and D. When a roll force (for roll right or roll left) equivalent to or greater than 1.1 ± 0.2 pounds is applied to the stick, continuity exists between terminals C and D.

The autopilot off switch (S11, fig. 7-11 (D)) is a normally closed, momentary-break-contact pushbutton switch. With the switch in the normally closed position, continuity exists between pins A and B.

The uncage boresight switch (S12) is a momentary-open-contact, normally closed pushbutton switch. With the switch in the normally closed position, continuity exists between pins C and D.

The nosewheel steering switch (S13) is a momentary-close-contact, normally open, pushbutton switch. With the switch in the normally open position, an open circuit exists between pins E and F.

The weapon release switch (S14) is a pushbutton, momentary-close-contact, normally open switch. With the switch in the normally open position, an open circuit exists between pins H and J.

The trim switch (S15) is a four-way button type. With the switch in the neutral (center) position, an open circuit exists between pins L and pins K, M, N, and P. With the trim button moved for noseup trim (button displaced down), continuity exists between pins L and M; with the trim button moved for nosedown trim (button displaced up), continuity exists between pins L and P; with the trim button displaced to the left, continuity exists between pins L and N; and with the trim button displaced to the right, continuity exists between pins L and K.

The attack commit switch (S16) is a two-position, double-pole, double-throw, trigger switch. With the switch in the normally open position, an open circuit exists between pins R and T and U and S. When the trigger is squeezed to the first position, continuity exists between pins U and S. When the trigger is further squeezed to the second position, continuity also exists between pins R and T.

The AFCS functions of the switches in the aircraft control stick are presented in table 7-2.

Table 7-2.—Function of switches in aircraft control stick

Switch	Nomenclature	Purpose	Settings and functional indications
S11	AUTOPILOT OFF switch	Emergency disengage switch for all AFCS switches.	Momentary on switch. (Diagonal striping of yellow and black.) Actuation causes all controller switches to disengage or move to OFF positions automatically.
S15	Trim switch	Position stabilizer and flaperon control surfaces for desired trim.	Forward, nosedown trim; aft, noseup trim; left, left wing down trim; right, right wing down trim.
S2	Stick pitchdown detent switch	Disengages pitch axis attitude control and roll damper for manual override stick steering.	Pilot force (1.1 lb) actuates the switch which cuts out AFCS attitude control for the duration of applied stick force. If AUTO/STAB-AUG switch is in AUTO mode, and either ALT or MACH switch is engaged, only the AUTO switch will remain engaged upon application of stick force. If the command switch is engaged, and the ballistic computer operation in effect, the command switch remains engaged so that ballistic computer set operation is automatically restored upon release of stick force. If the command switch is engaged, and ALS data link operation is in effect, the command switch disengages upon application of stick force and may be manually reengaged after release of stick force.
S1	Stick pitchup detent switch.	Disengages pitch axis attitude control for manual override stick steering.	(See S2.)
S3	Stick roll right detent switch.	Disengages roll axis attitude control for manual override stick steering.	Pilot force (1.1 lb) actuates the switch. The switch cuts out all roll damper attitude control for the duration of applied stick force. If the command switch is engaged, the switch will remain engaged so that roll command operation is restored upon release of stick force. If TPQ-10 ENGAGE switch is actuated, it disengages upon application of stick force.
S4	Stick roll left detent switch.	Disengages roll axis attitude control and roll damper for manual override stick steering.	(See S3.)

AUTOMATIC PILOT ENGAGING CONTROLLER

The automatic pilot engaging controller, located in the cockpit, is a pilot-operated switching device that is used to select operational modes. (See fig. 7-12.) The switches of the component serve as manually operated interlocks in establishing the circuitry required for system operation in accordance with the operational mode selected. The controller consists of three solenoid-held toggle switches (ON-OFF, CMD, and AUTO/STAB-AUG), two solenoid-held, square pushbutton switches (ALT and MACH), and a round, momentary-on pushbutton switch (RETURN TO LEVEL). The edge-lighted panel incorporates seven inbedded panel lamps.

The ON-OFF switch (S26) is a magnetic hold-in toggle switch. This switch, used to engage interlock circuitry and to apply 28-volt dc interlock voltage to the AFCS, has an ON and an OFF position. With the switch in OFF position, continuity exists between A and F; with the switch in ON position, continuity exists between A and E. With power applied, the 28-volt dc power is applied to pin A, and routed to pin E when the switch is moved from OFF to the ON position. In normal system operation, this voltage is applied to external interlock circuitry. The switch is magnetically held in the ON position, and returns to OFF only when voltage is removed or when the switch-holding solenoid is manually overridden.

The AUTO/STAB-AUG switch (S25) is a magnetic hold-in toggle switch. This switch, used to engage the attitude hold mode, contains an AUTO and a STAB-AUG position. With the switch in STAB-AUG (disengaged) position, continuity exists between b and J. With the switch in AUTO position, continuity exists between b and H. With power applied, the 28-volt dc on pin b is routed to pin H when the switch is moved from STAB-AUG position to AUTO position. The switch is magnetically held in the AUTO position and returns to STAB-AUG only when voltage is removed or when the switch-holding solenoid is manually overridden.

The CMD (command) switch (S21) is a magnetic hold-in toggle switch. This switch, used to engage the command mode, contains an ON and an OFF position. With the switch in OFF position, continuity exists between S and U; with the switch in ON position, continuity exists between S and T. With power applied the 28-volt dc on pin S is routed to pin T when the switch is moved from the OFF to ON position. In normal system operation, 28-volts dc is applied to pin d through the external interlock circuitry. The switch is magnetically held in the ON position and returns to OFF only when voltage is removed from pin d or when the switch-holding solenoid is manually overridden.

The ALT switch (S23) is a magnetic hold-in, square pushbutton switch, used to engage the altitude hold mode. With the switch in the disengaged (not depressed) position, continuity exists between K and M. With the switch in the engaged (depressed) position, continuity exists between L and M. With power applied, the switch applies 28-volt dc to pin L when the switch is depressed to the engaged position. The switch is magnetically held in the engaged position and disengages only when voltage is removed.

The RETURN TO LEVEL switch (S24) is a momentary-close round pushbutton switch used to engage the automatic return to level flight mode. With the switch in OFF (not depressed) position, continuity exists between X and V. With the switch in the engaged (depressed) position, continuity exists between V and W. With or without power applied, the switch returns to OFF position when depressed and released.

The MACH switch (S22) is a magnetic hold-in, square pushbutton switch, used to engage the Mach hold mode. With the switch in the disengaged (not depressed) position, continuity exists between P and R. With the switch in the engaged (depressed) position, continuity exists between N and P. With power applied and the switch depressed to the engaged position from the disengaged position, 28-volt dc input from pin P is applied to pin N. The switch is magnetically held in the engaged position and disengages only when voltage is removed.

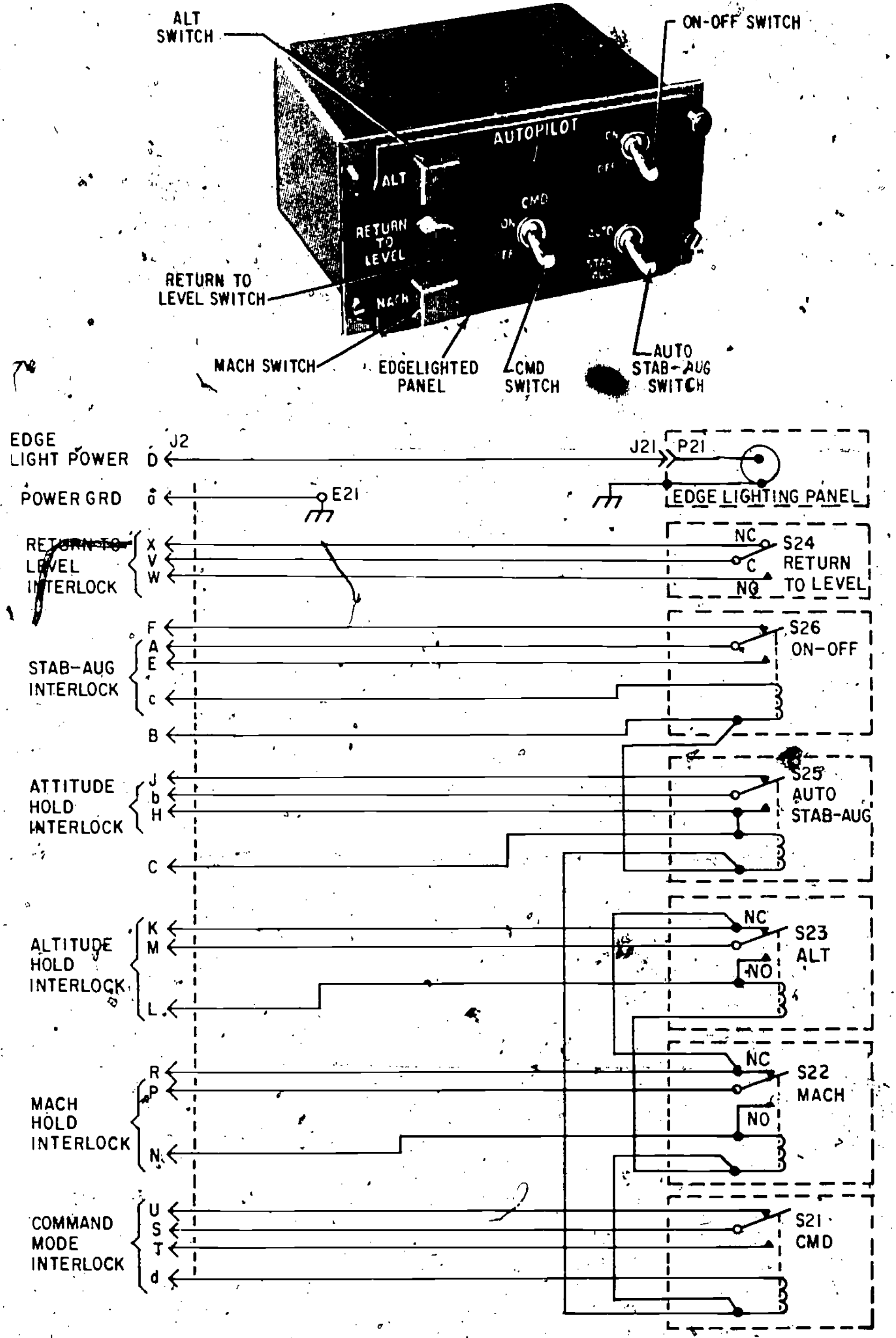

208.150

Figure 7-12.—Automatic pilot engaging controller.

AIR NAVIGATION COMPUTER

Since all operational functions of the automatic flight control system are channeled through the computer, it is the heart of the entire system. The computer couples, shapes, and amplifies stability augmentation and automatic flight control signals. These signals are used to operate the actuators previously described. AC control inputs and error signal inputs are accepted from auxiliary subsystems and sensors. These inputs are obtained from the inertial navigation system, ballistic computer, air data computer, ALS data link, and radio receiver. Inputs are also obtained from pitch, roll, and yaw actuator position sensors and from AFCS sensors, including the normal and lateral accelerometers and the rate gyroscopes. AC excitation voltages are also supplied by the computer to all of the components and auxiliary equipment which supply inputs to the AFCS. Signal switching operations are controlled by the computer through an interlocking relay arrangement in connection with the controller mode selection switches. Provisions for gain adjustments of the major system parameters are provided through a calibration board mounted on the front of the computer. The computer is comprised of an equipment rack and seven amplifier modules. (See fig. 7-13.) Each of the seven modules contain submodules, some of which are identical and are interchangeable between modules.

Command Coupler Module

Command and sensor signals from various sensors and reference units are received by the command coupler. These signals are summed, shaped, amplified, and limited, and then distributed to other circuitry for execution of the commands. To accomplish these functions, the command coupler contains circuitry for the following functional channels:

1. Altitude, Mach, and pitch command channel.
2. Vertical path damping channel.
3. Turn coordination channel.
4. Lateral path channel.
5. G-command channel.
6. Flaperon limiter channel.

Each of the channels is illustrated in figure 7-14. During the following discussion, reference should be made to this illustration.

ALTITUDE, MACH, AND PITCH COMMAND CHANNEL.—Altitude, Mach, and pitch command information error signals are applied to demodulator-modulator Z100-5. In the demodulator portion, the input signal is converted to dc which is proportional to the input, with the polarity dependent on the phase of the input. The output of the demodulator is passed through a low-pass filter (C5011) to the input of the modulator. The modulator converts the varying dc signal to a modulated, 400-Hz signal. The output of the modulator is passed through a limiter which limits its magnitude. The limited ac signal is fed to the AFCS servosystem to establish a pitch attitude, to command a new pitch attitude, or to bring the aircraft back to the established reference.

VERTICAL PATH DAMPING CHANNEL.—The normal accelerometer and the $(1-\cos\phi)$ are signals applied to demodulator-modulator Z100-7. The signal is converted to dc, passed through high- and low-pass filters (C5017 and C5018, respectively), and modulated. The high-pass filter (C5017) is used to block steady-state inputs such as nulls. The low-pass filter (C5018) is used to provide a low impedance path to ground for high-frequency signal inputs (noise). The ac output signal is fed to the pitch computer, operating as an integrator to provide vertical path damping in the altitude hold and Mach hold modes.

TURN COORDINATION CHANNEL.—The lateral accelerometer signal is applied to the demodulator section of Z100-8 where it is converted to dc. This dc signal is fed to a displacement section and an integral section. In the displacement section, the dc signal is filtered with a short time constant filter (R5012 and C5016) to eliminate noise. The signal is then converted to ac in the modulator section of Z100-8. In the integral section, the dc signal is

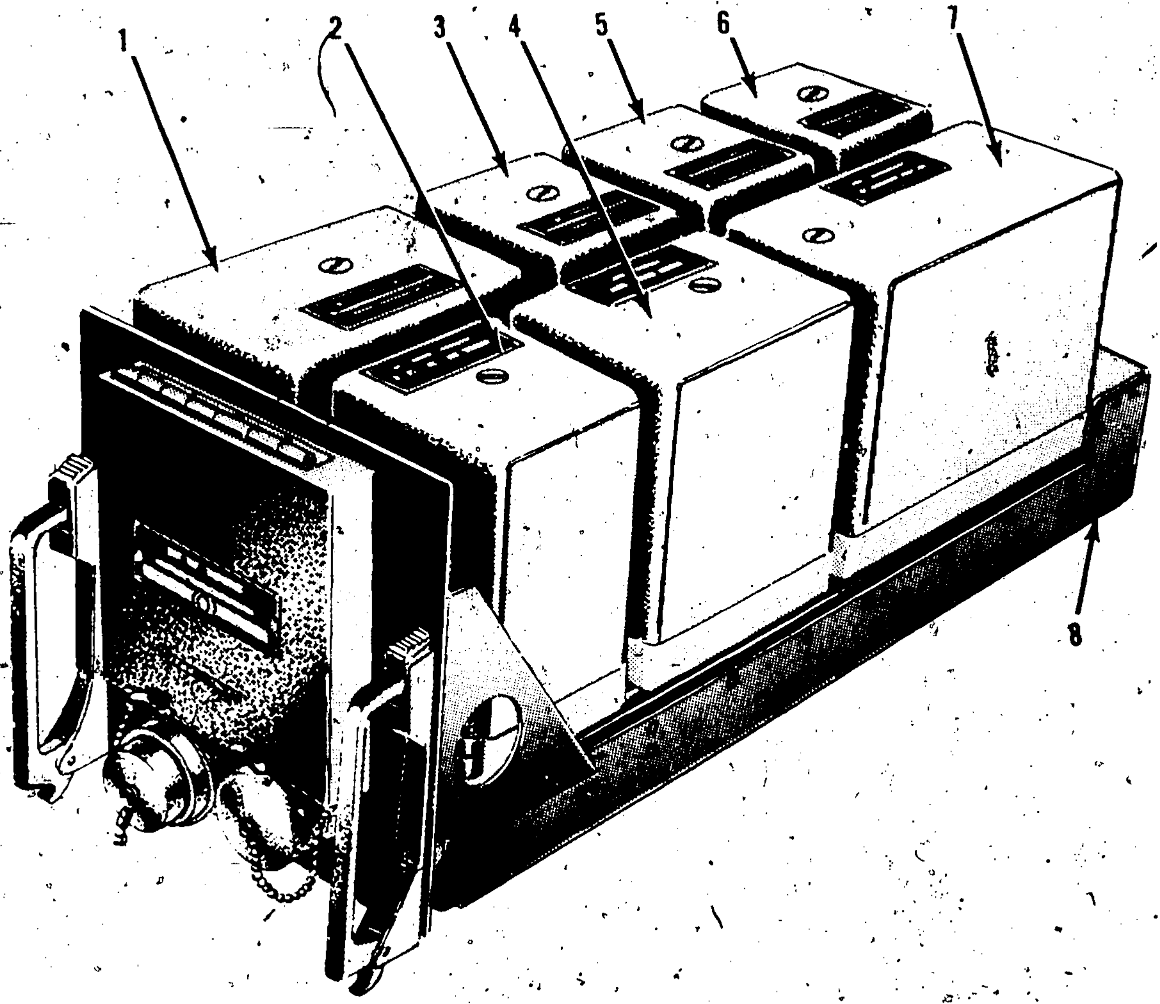

1. Pitch computer amplifier.
2. Flaperon (roll) servoamplifier.
3. Stabilizer (pitch) servoamplifier.
4. Roll computer amplifier.
5. Rudder (yaw) servoamplifier.
6. Heading computer amplifier.
7. Command coupler amplifier.
8. Equipment rack.

208.151

Figure 7-13.—Air navigation computer.

filtered heavily (R807, C5014, and C5015) and then converted to ac in the modulator section of Z800-2. The displacement and integral signals are then summed at the input to the buffer amplifier section of Z800-2. The combined signal is fed to the AFCS servosystem to provide rudder deflections for turn coordination.

LATERAL PATH CHANNEL.—Heading computer control transformer heading reference (through the air data computer Mach potentiometer and an emitter follower) or roll command signals are applied to demodulator-modulator Z100-4. The particular signal, depending on AFCS mode, is converted

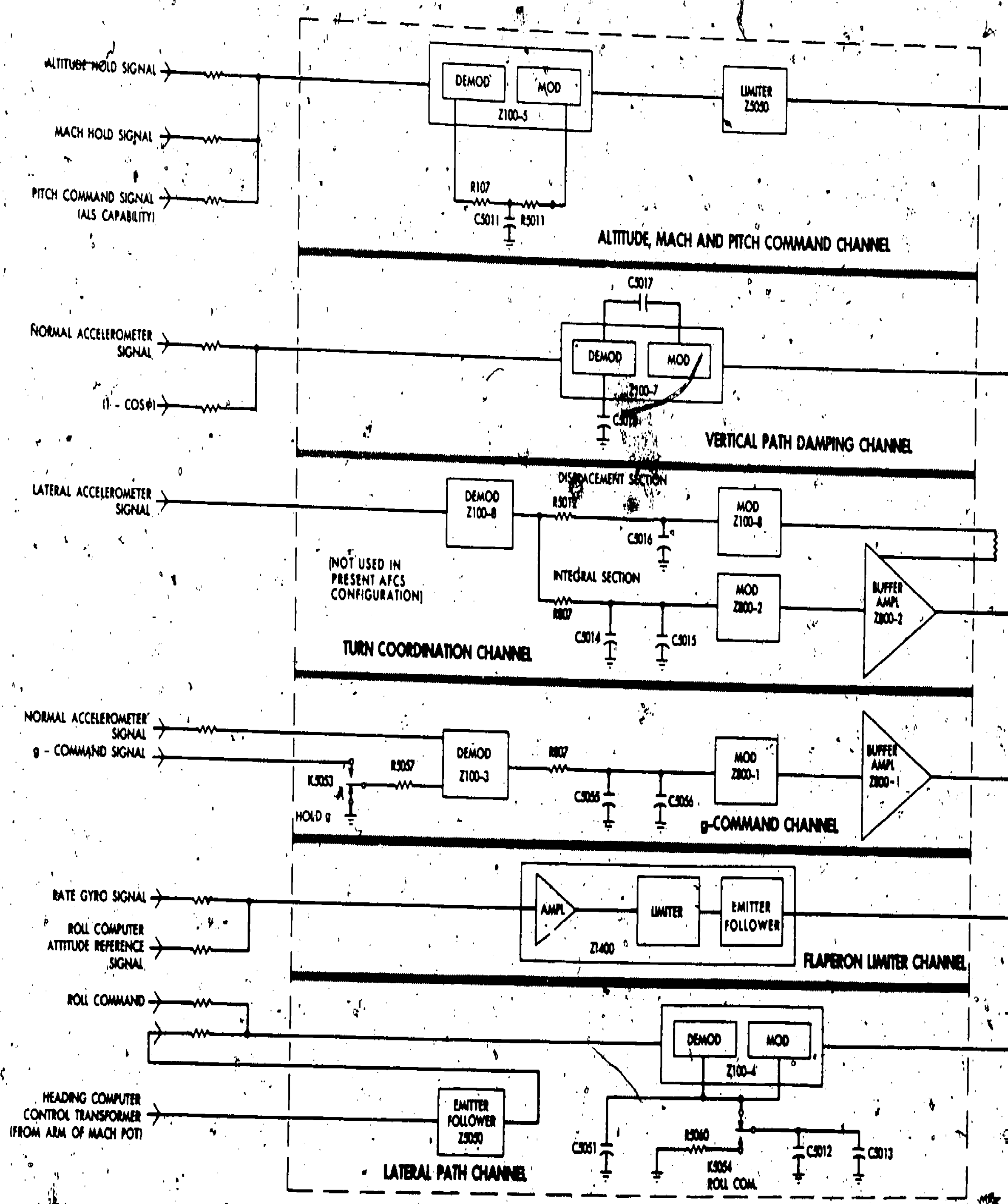

Figure 7-14.—Command module functional channels block diagram.

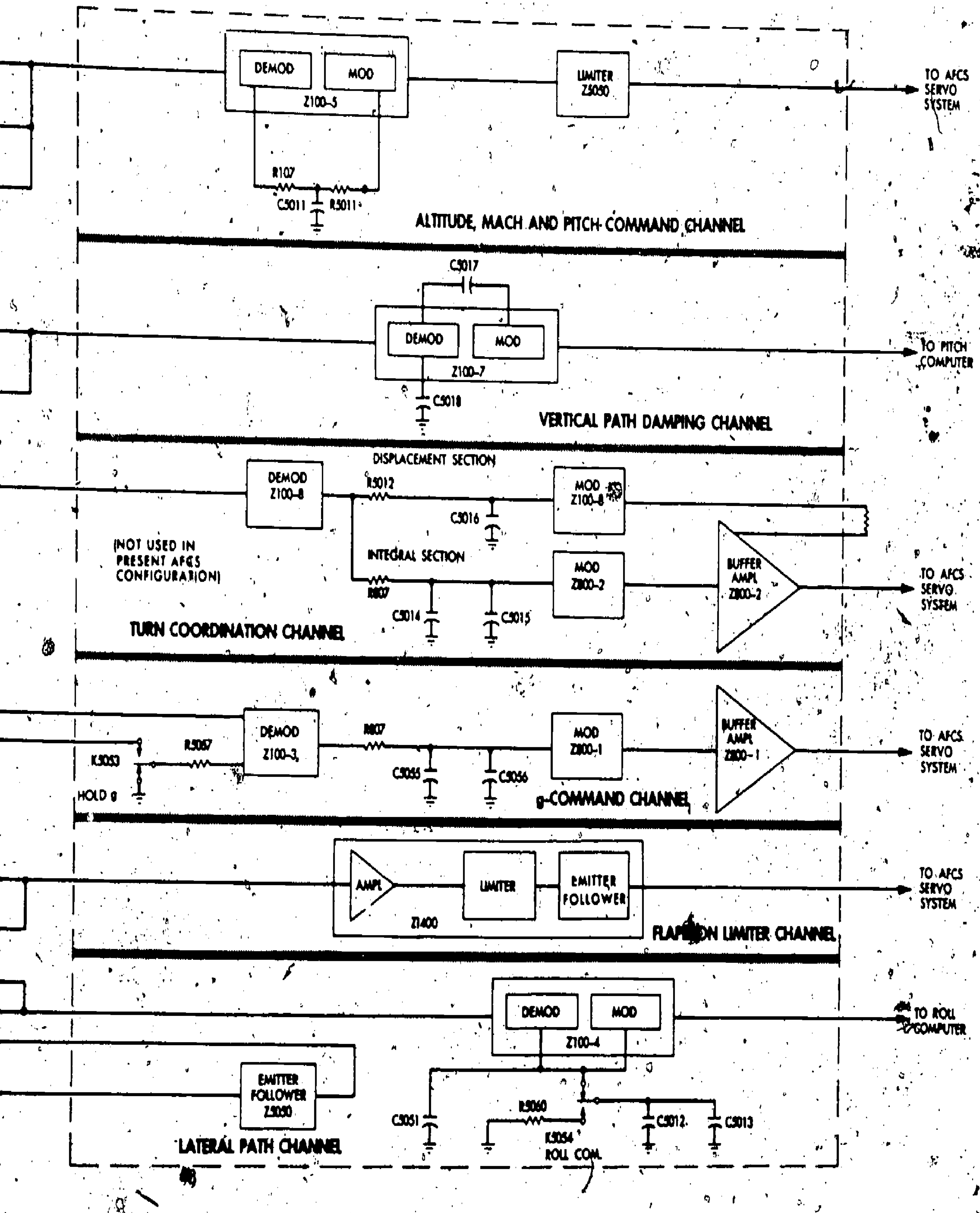

208.152

Figure 7-14.—Command module functional channels block diagram.

to dc, filtered, modulated to 400 Hz, and limited. A maximum bank angle is established by the limited output of Z100-4. This output is fed to the roll computer to command bank angles proportional to the error signal.

G-COMMAND CHANNEL.–The normal accelerometer signal and the g-command signal (through contacts of K5053), are applied to demodulator Z100-3. The error signal is converted to dc and filtered heavily in the same manner as in the integral section of the turn coordination channel. It is then converted to ac in the modulator section of Z800-1 and amplified in the amplifier section of Z800-1. The resultant output is fed to the AFCS to command stabilizer motions proportional to the integral of g-command error.

FLAPERON LIMITER CHANNEL.–Rate gyro and roll computer attitude reference signals are applied to amplifier limiter Z1400. These signals are amplified in the amplifier section of Z1400 and applied to the limiter section of Z1400 to assure that the flaperon authority limit is not exceeded.

Roll Computer Module

The roll computer amplifier module accepts inputs from the aircraft roll attitude reference and from the command coupler lateral path channel. The module output is applied to the roll servoamplifier module to command aircraft roll through flaperon deflection. The module incorporates a synchronization channel comprising a motor amplifier and servo assembly. The servo consists of a motor tachometer driving a control transformer, a sine-cosine resolver, and roll-position-sensing sector switches, through a reduction gear train. (See fig. 7-15.) In addition, the module incorporates roll synchronization monitor circuitry, pitch-up compensation circuitry for turns, five relays, and a power supply.

In the roll attitude synchronizing configuration, relays K3001, K3003, and K3004 are deenergized. The control transformer, which is connected back-to-back with the roll synchro transmitter of the inertial navigation system, senses changes in the roll attitude of the aircraft. The resulting error signal is fed to the input of the motor amplifier. The amplified signal drives the motor tachometer, which in turn drives the control transformer through a 525:1 gear ratio, thereby maintaining the control transformer output at a null. In order to keep this closed servo-loop stable, the output of the tachometer is fed back and summed at the motor amplifier input to provide the necessary damping.

The attitude hold mode is engaged via the AUTO position of the AUTO/STAB-AUG switch on the controller when the aircraft roll attitude is greater than 5° as sensed by the sector switch. Relay K3001 is energized, clamping the motor, thereby preventing any further synchronization and establishing a fixed roll reference. Deviations about this reference attitude are sensed by the control transformer and fed to the AFCS servosystem to perform the necessary corrective action to maintain the reference attitude.

The heading hold configuration and wing leveling are automatically selected when the attitude hold mode is engaged with the aircraft roll attitude between zero and 5°. In this mode, relay K3001 is deenergized, unclamping the motor; and relay K3004 is energized, inserting the sine output of the roll computer resolver into the input of the motor amplifier. The heading computer reference is clamped by means of interlocking relays. Deviations from this reference heading are sensed by the locked heading computer control transformer and fed to the input of the roll computer motor amplifier, thereby driving the motor, which in turn drives the resolver and the control transformer.

The resolver sine output is fed back to the motor amplifier input to cancel the error signal from the heading computer control transformer, and the roll computer control transformer output is fed to the AFCS servosystem to establish an aircraft bank angle. The resulting bank changes the aircraft heading, thereby reducing the heading error until it is zero. A wings-level condition is then established. In the TPQ-10 mode, the heading computer (operating as an integrator) generates heading errors proportional to ground commands that are inserted as inputs to the roll computer (in a manner identical to the heading hold mode) to

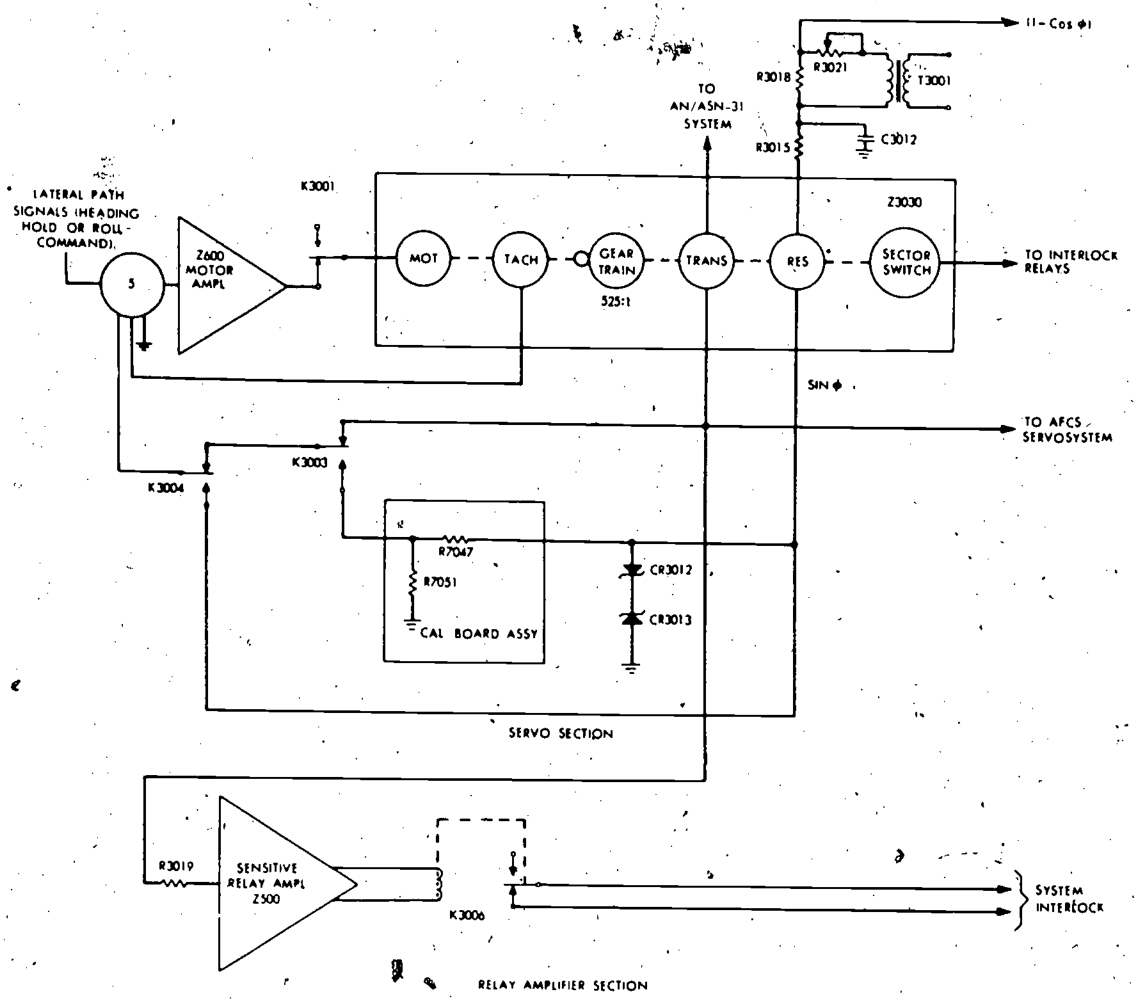

208.153

Figure 7-15.—Roll computer module block diagram.

command bank angle proportional to heading error. Roll command inputs to the roll computer also cause the servo section to function in a manner similar to that described for the heading hold mode; that is, command bank angle proportional to input roll command error.

In the roll back mode, the sector switch assembly, which rotates with the sine resolver, measures angular roll displacement from level flight. The upper limit on roll attitude hold is ±60°. When the attitude hold mode is engaged with the roll attitude greater than ±60°, relay K3003 is energized through conducting segments on the sector switch. The resolver sine output is fed back to the motor amplifier input through a limiting network (CR3012 and CR3013) to establish a roll back to 60°. The control transformer output is fed into the AFCS servosystem that commands flaperon deflection to roll the aircraft back towards 60°.

The roll computer is clamped when the roll attitude returns to 60°, and this attitude is maintained as described in the attitude hold mode discussion. When the return to level switch on the controller is depressed, relay K3003 remains engaged (roll angle greater than 60°) or will become engaged (roll angle less than 60°) through rack interlocking relays. The aircraft

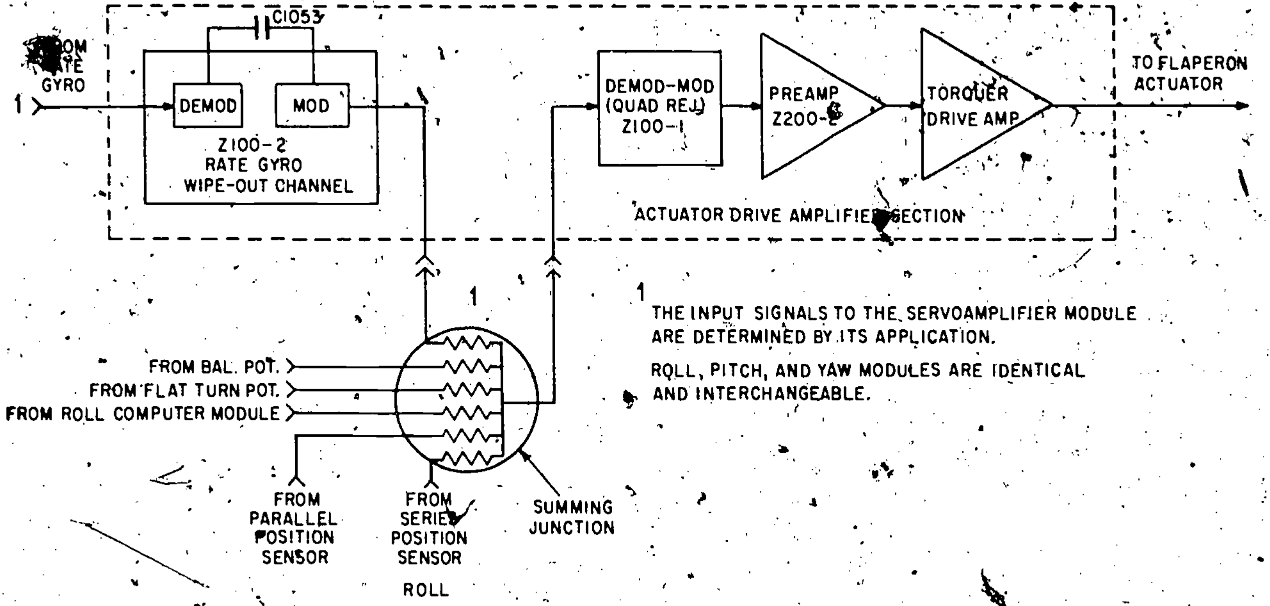

208.154

Figure 7-16.—Roll servoamplifier module block diagram.

rolls back at its established rate until the bank angle is 5°, at which point the heading hold function of the attitude hold mode or roll command in the command modes is reestablished.

The (1-cos ϕ) turn compensation signal is derived from the cosine winding of the servo section resolver. This winding provides an output voltage proportional to the cosine of angular roll displacement from level flight (cos ϕ). The signal is series-summed with transformer T3001 to provide a net output of zero volts at zero roll attitude ($\phi = 0°$). For roll displacement from level flight, this net output is then proportional to (1 - cos ϕ). Resistor R3015 and capacitor C3012 correct the phase of the resolver to facilitate the summation with T3001. Resistors R3018 and R3021 adjust the output of T3001 to provide for a cancellation of the zero attitude resolver output.

The sensitive relay amplifier receives a constant input from the control transformer. When roll displacement between the stable platform roll reference and the control transformer exceeds 2°, the output signal from the amplifier energizes relay K3006, preventing engagement of the AFCS AUTO switch.

Roll Servo Module

The roll servoamplifier module (fig. 7-16) receives a rate gyro input, which is shaped and mixed with command and feedback signals for roll axis control. The output is supplied to a hydraulic servo-valve actuator which moves the flaperons as required.

The input from the roll rate gyro is a 400-Hz signal whose phase and amplitude are dependent upon the direction and amount of gyro precession. The input signal is coupled to the demodulator section of Z100-2, where it is compared with a 400-Hz reference voltage and changed to a varying dc signal. The amplitude of the demodulator output is proportional to the input, and the polarity is dependent upon the phase. Capacitor C1053 offers coupling between the demodulator and the modulator, wiping out the dc level caused by steady-state (constant amplitude) signals. The varying dc is converted to a modulated 400-Hz output, with zero output for steady-state inputs. Since the demodulator is sensitive only to voltages in phase, or 180° out of phase with the reference voltage, quadrature voltage rejection takes place and the output is a "clean" signal.

The summing junction parallel-sums the input from the wipe-out channel with other roll command and feedback signals as shown in figure 7-16. The summed voltage is applied to the input of the actuator drive amplifier section, where it is demodulated (again with quadrature rejection) and changed to a varying dc. The dc voltage is converted to an ac signal output which couples to preamplifier Z200-2, a three-stage, class A amplifier with a grounded emitter output.

The torquer drive amplifier operates a servo valve in the flaperon actuator to furnish necessary aileron control.

Since the pitch servo module and the yaw servo module are identical and interchangeable with the roll servo module, they are not discussed.

Pitch Computer Module

The pitch computer amplifier module accepts inputs from the altitude sensor, Mach sensor, pitch attitude reference, and command coupler normal accelerometer channels. (See fig. 7-17.) The output of the module is applied to the pitch servoamplifier module to command aircraft pitch through stabilizer deflection. The module incorporates a servo channel comprising a motor amplifier and a dual gear ratio servo assembly. The servo consists of a motor tachometer that drives a control transformer and a pitch attitude position-sensing sector switch through a dual-ratio gear train.

The gear ratio is changed through action of a solenoid-operated gear shifter mechanism. In addition, the module incorporates dual-purpose relay circuitry for pitch synchronization monitoring and automatic stabilizer trim functions, ten relays, and a power supply submodule card. The internal constructions and submodule cards of the pitch computer amplifier module are similar to those of the roll computer and roll servoamplifier module.

In the pitch-attitude synchronization mode, relays K4001 and K4006 (fig. 7-17) are deenergized. The control transformer, which is connected back-to-back with the transmitter in the inertial navigation system, senses changes in the pitch attitude of the aircraft. The resulting error signal is fed back to the input of the motor amplifier. The amplified signal drives the motor tachometer, which in turn drives the control transformer through the 1,540:1 gear ratio, thereby maintaining the control transformer output at a null. In order to keep this closed servo loop stable, the output of the tachometer is fed back and summed at the motor amplifier input to provide the necessary damping.

In the attitude hold mode, relay K4001 is energized, hence the motor is clamped. This prevents any further attitude synchronization and establishes a fixed pitch reference. Deviations about this reference attitude are sensed by the control transformer and fed to the AFCS servosystem to perform the necessary corrective action to maintain the reference attitude.

In the altitude and Mach hold mode, relay K4001 is deenergized and K4006 is energized. This allows the servo section to run open loop and act as an electromechanical integrator. The solenoid in the dual-ratio servo assembly is energized, and the gear ratio is changed to 85,900:1. Any altitude or Mach error signal that may exist at the input to the motor amplifier is integrated by driving the control transformer in a direction to reduce the altitude or Mach error to zero, thereby altering the aircraft pitch attitude to maintain the reference altitude or Mach number.

In the pitchback mode, the section switch assembly, which rotates with the control transformer, establishes the limits of angular pitch displacement from level flight. The limits on attitude hold are +25° (up) and -60° (down) from level flight. When the attitude hold mode is engaged with the pitch attitude in excess of either +25° or -60°, relay K4003 (+25°) or K4004 (-60°) is energized via two conducting segments on the switch assembly. In addition, relay K4006 is energized, thus stopping synchronization; and relay K4001 is deenergized, unclamping the motor input. When either relay K4003 or K4004 is energized, a fixed voltage is applied to the motor amplifier input from transformer T4001. This voltage causes the motor to run at a rate

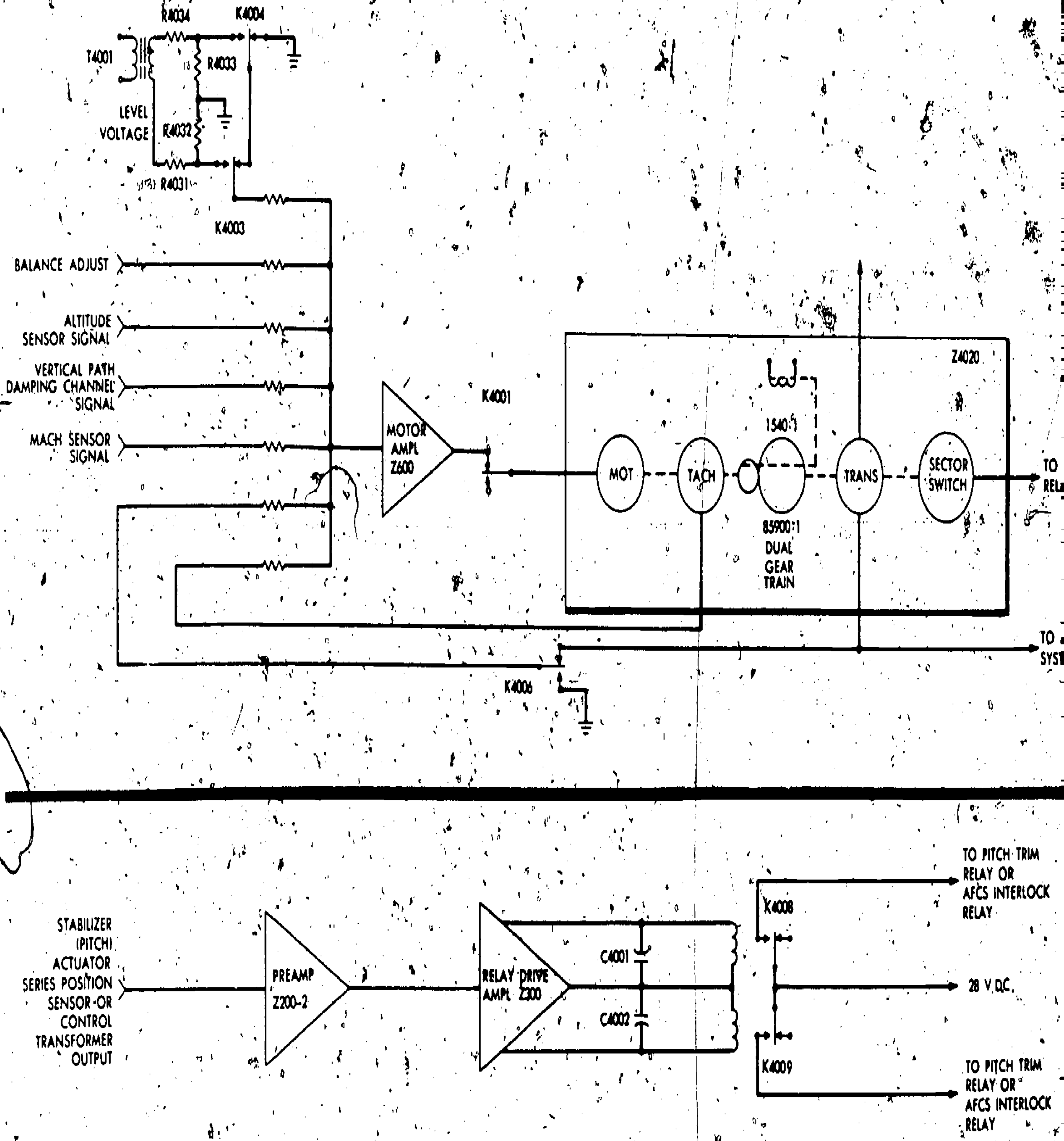

Figure 7-17.—Pitch computer module block diagram.

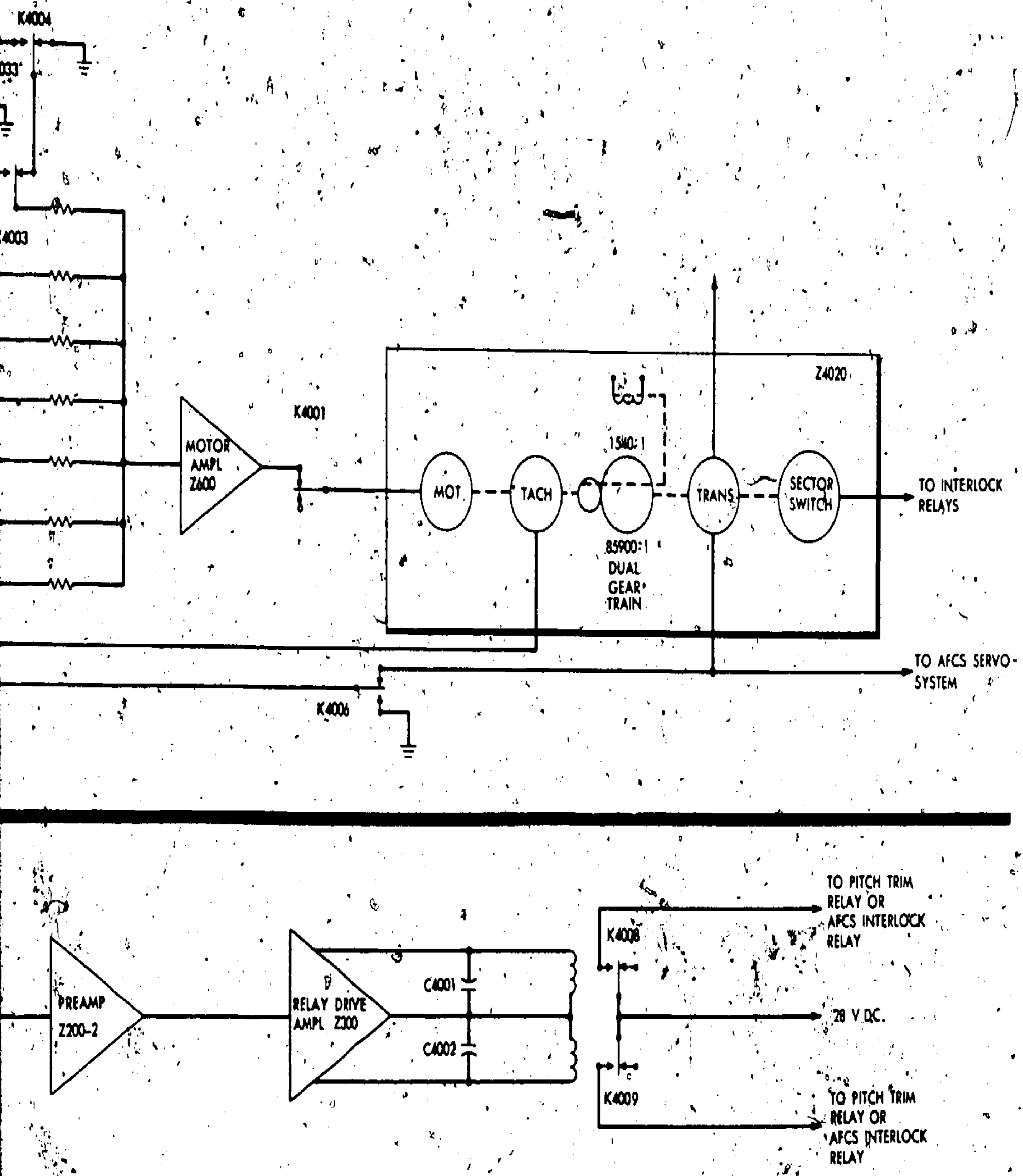

208.155

Figure 7-17.—Pitch computer module block diagram.

(predetermined) at which the tachometer output cancels the level voltage input. The resulting control transformer output is fed into the AFCS servosystem that commands the aircraft to pitch back toward either +25° or -60°. The pitch computer motor is clamped and the level voltage removed when the pitch attitude reaches +25° or -60°. This attitude will then be maintained as described above under attitude hold mode operation.

When the return to level switch on the controller is depressed, relay K4003 or K4004 will remain energized (from pitch angles greater than +25° or -60°) or become energized (from pitch angles less than ±25° or -60°) through the rack interlocking relays (after completion of roll return to level). The aircraft will pitch back at its established rate until the pitch attitude is +7° (returning from pitchup angle) or +3° (returning from pitchdown angle). The pitchback rate has been set to result in a maximum positive incremental load factor of approximately 3.5 g when pitching back from negative pitch angles and maximum negative incremental load factor of 1 g when pitching back from positive pitch angles.

Heading Computer Module

The heading computer amplifier module (fig. 7-18) accepts signals from the heading attitude reference and from the radio receiver. The output of the heading computer amplifier module, parameter-controlled by a Mach potentiometer, is applied to the lateral path channel of the command coupler to command roll computer shaft position proportional to heading error. Heading corrections are made by commanding aircraft roll through flaperon deflections. The module incorporates a synchronization channel, consisting of a motor amplifier and a servo assembly, which follows up the heading data transmitted from the inertial navigation system.

The servo assembly consists of a motor tachometer that drives a control transformer through a reduction gear train. The module also contains heading synchronization monitor circuitry, a power supply, and three relays. In addition, the module provides a 400-Hz signal that is routed through radio receiver relay contacts to drive the heading computer in the TPQ-10 integrator configuration.

The servo section of the heading computer (fig. 7-18) is operative during the following modes and/or configurations of the AFCS operation; heading synchronization, heading hold, and TPQ-10 mode.

In the heading synchronization mode, relays K8001 and K8003 are deenergized. The control transformer, which is connected back-to-back with the heading transmitter in the inertial navigation system, senses changes in the heading attitude of the aircraft. The resulting error signal is fed back to the input of the motor amplifier. The amplified signal drives the motor tachometer, which in turn drives the control transformer through the 5,974:1 gear ratio, thereby maintaining the control transformer output at a null. To keep this closed servo loop stable, the output of the tachometer is fed back and summed at the motor amplifier input to provide the necessary damping.

In the heading hold mode, relays K8001 and K8003 are energized. Hence, the motor is clamped. This prevents any further heading synchronization and establishes a fixed heading reference. Deviations about this reference are sensed by the control transformer and fed to the AFCS control system through the lateral path channel of the command coupler and of the roll computer, which establishes a bank angle proportional to heading error to perform the necessary corrective action and maintain the heading reference.

In the TPQ-10 mode, relay K8002 is energized and K8003 is deenergized. This allows the servo section to run open loop and act as an electromechanical integrator. Signals (in the form of 400-Hz pulses) received through the AFCS ground control relay are fed to the motor amplifier that drives the control transformer. The control transformer output is fed through the lateral path channel of the command coupler to the roll computer (which functions the same as it does in the heading hold mode) to roll the aircraft, thereby changing heading.

THEORY OF OPERATION

The AFCS is a 400-Hz information-carrier system with positioning type servosystems.

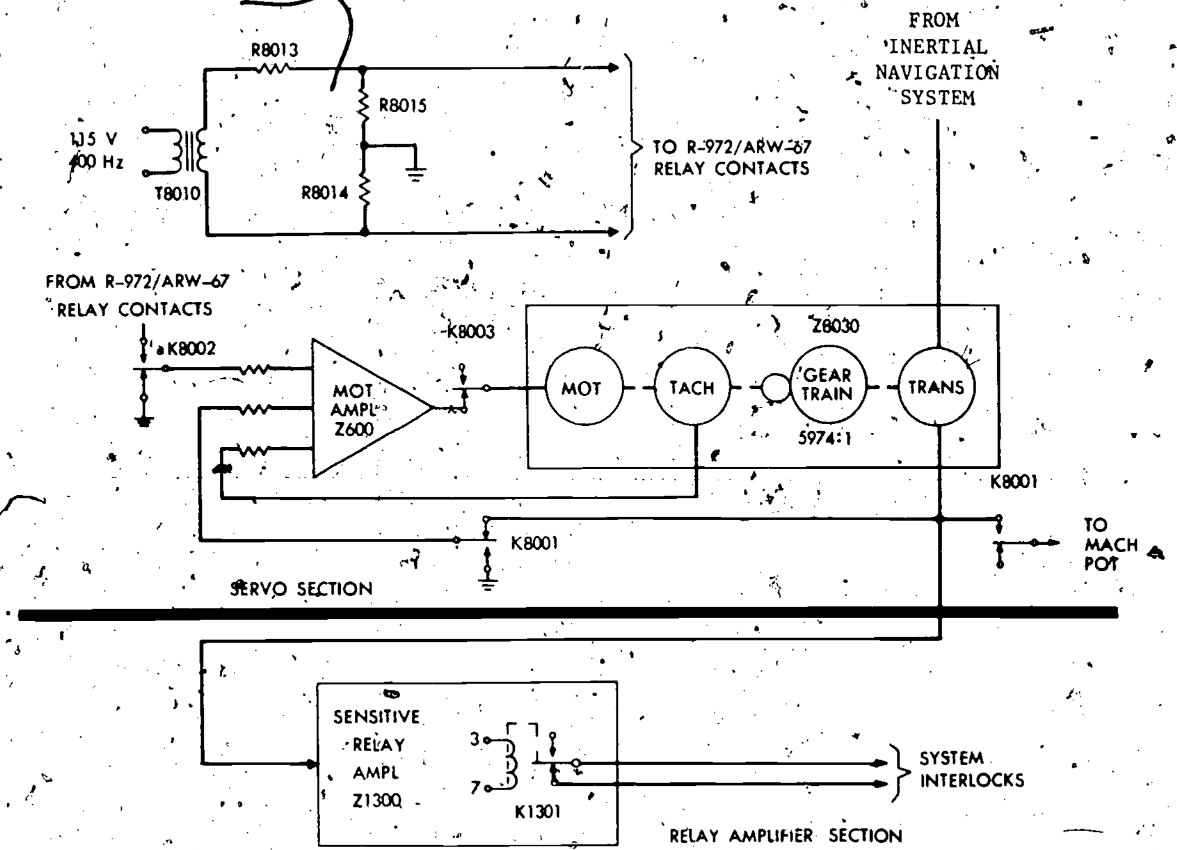

208.156

Figure 7-18.—Heading computer module block diagram.

Control and feedback signals are combined by using parallel summation techniques. Parallel summation is accomplished by injecting ac signals through relatively high impedance resistors to low input impedance transistor summing amplifiers. System gains are established by selecting appropriate summing resistors (the higher the resistor, the lower the gain). Control signal shaping is accomplished by passive RC networks. Prior to shaping, ac signals are converted to dc by transistorized, amplifier-demodulators. The shaped dc signal is reconverted to a 400-Hz signal by half-wave modulators for ac parallel summation. The resulting ac signal is converted to a proportional mechanical output by the AFCS servosystem. The servosystem output is mechanically summed (in the actuator series configuration) with the manual control system inputs to position the control surface.

NOTE: The air data computer contains six dynamic-pressure q-potentiometers and one Mach-number potentiometer for gain programing. Q-potentiometers No. 1, 2, 5, and 6 are used for parameter control of AFCS g-command, turn coordination, roll rate gyro, and pitch-up turn compensation signals, respectively. Q-potentiometers No. 3 and 4, provided for shaping of AFCS yaw and pitch rate gyro signals, are not used in the present AFCS configuration. The MACH number potentiometer is used for shaping of AFCS heading error signal.

Signal flow theory of operation is developed for each aircraft axis (rudder, flaperon, and stabilizer). The AFCS operation in each axis is divided into operating modes. However, to aid in understanding, the AFCS servosystem and aircraft control system are discussed separately before proceeding with the theory or operation in the operating modes.

A summary of AFCS operation, tying together the AFCS operating modes, switching requirements, and signal data, is presented in table 7-3 following the signal flow discussion.

RUDDER AXIS SIGNAL OPERATION

Two primary control functions are provided by the rudder axis-yaw damper and coordination of turn maneuvers. The selection of these functions is obtained by engagement of the ON-OFF switch on the controller.

A diagram illustrating rudder axis signal flow is shown in figure 7-19. The combined servo and control system is a surface positioning device where sensor and control inputs are summed at summing junction 2 of the figure to command surface position.

The rudder AFCS servosystem consists of the actuator drive amplifier section of the yaw servoamplifier and the AFCS portion of the rudder electrohydraulic actuator, as shown in figure 7-19. The actuator drive amplifier rejects quadrature voltages and amplifies and converts input ac control signals to dc signals. The dc output polarity is dependent upon the input signal phase relationship. The actuator drive amplifier dc output is fed to the actuator electrohydraulic servo valve. The valve commands actuator mechanical output at an initial rate, and in a direction dependent on the polarity of the dc signal input. The actuator position sensor develops an ac signal proportional to actuator mechanical output. This position feedback signal closes the AFCS servosystem loop (summing junction 2), providing rudder actuator or position proportional to the ac signal input. When the position sensor output cancels the net input to summing junction 2, thereby reducing the actuator drive output to zero volts, the actuator stops moving. Balance potentiometer R1072Y is summed with the feedback signal. This potentiometer is required to remove electrical and mechanical imbalances and thereby eliminate engage errors.

The AFCS output and the manual rudder-pedal input are mechanically summed in a series arrangement (summing junction 3). This series arrangement prevents surface deflections due to AFCS electrical inputs being reflected at the rudder pedals. Both electrical and manual inputs can be injected simultaneously, with the resultant surface deflection being the sum of the two. The mechanical summation of the two inputs is fed through the control linkages to the power actuator. The rudder actuator does not operate in parallel; it is capable of manual and series operation only. The series mode is the AFCS operating mode of the actuator.

NOTE: When an actuator operates in series, the applicable aircraft control surface is positioned through its electrohydraulic actuator so that no motion is transmitted back to the stick. Only the stabilizer actuator has a parallel operating mode. In this configuration, aircraft stabilizer motion is transmitted through mechanical linkage to the stick. The stabilizer actuator operates in the parallel configuration during the g-command and return to level modes of AFCS operation.

The AFCS can command up to ±4° of rudder surface movement through the power actuator. The rudder pedal is mechanically limited to command ±35° with flaps or gear down (landing condition). In the clean configuration (flaps and gear up), the rudder pedals can command ±4°.

The rudder axis functions identically in all modes to provide yaw damping and turn coordination.

Stability augmentation mode engagement energizes the actuator solenoid valve to permit hydraulic flow, and releases the mechanical lock on the rudder actuator, allowing automatic rudder control to provide yaw damping and coordination of turn maneuvers.

Yaw Damper

The yaw damper function provides a rudder deflection proportional to and opposing aircraft angular yaw rate. The stability sensor for the yaw damper is the yaw rate gyro portion of the rate gyroscope. The sensor output is shaped in the yaw rate gyro wipe-out channel before being inserted into the rudder AFCS servosystem

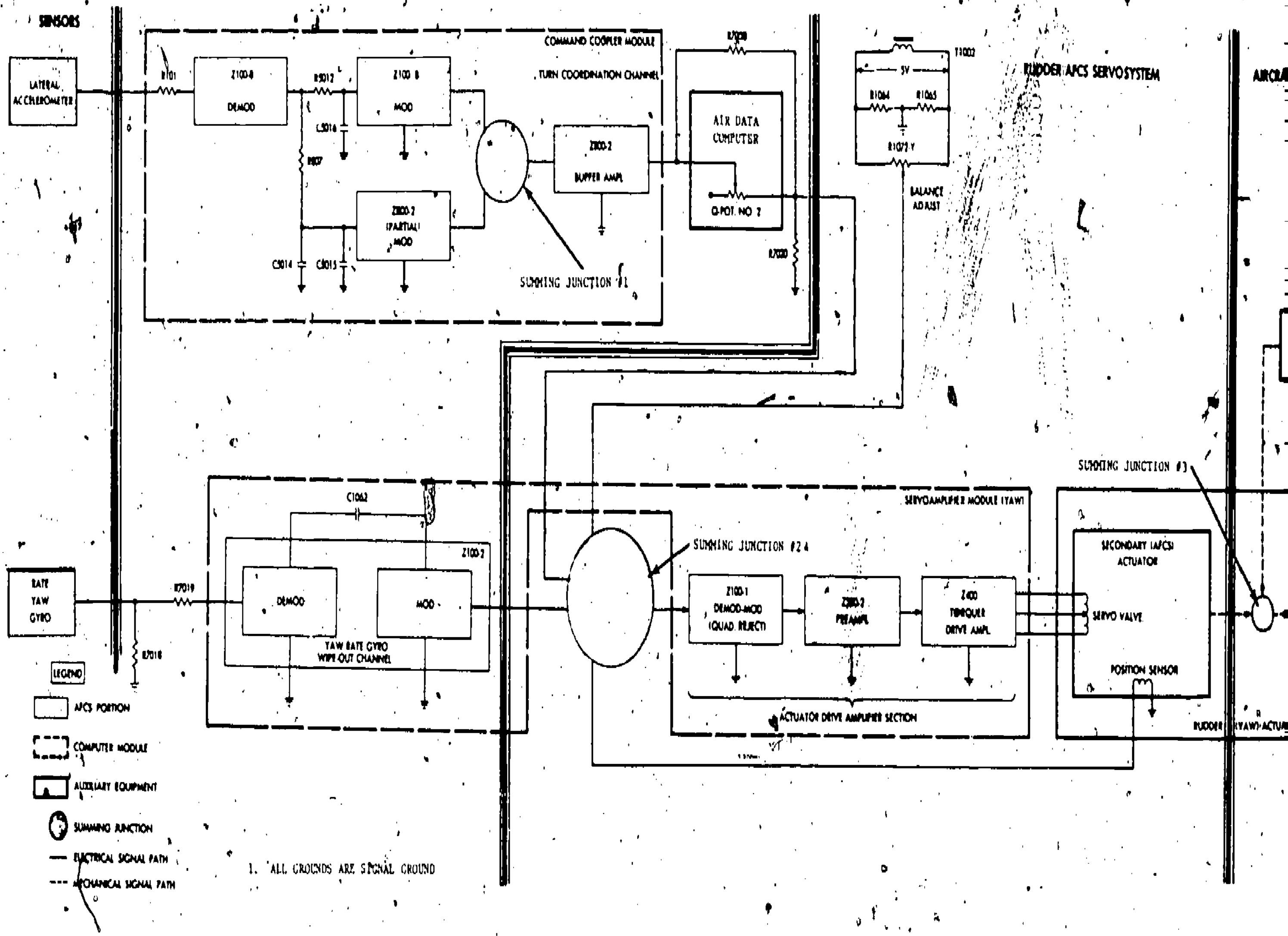

Figure 7-19.—Rudder axis signal flow diagram.

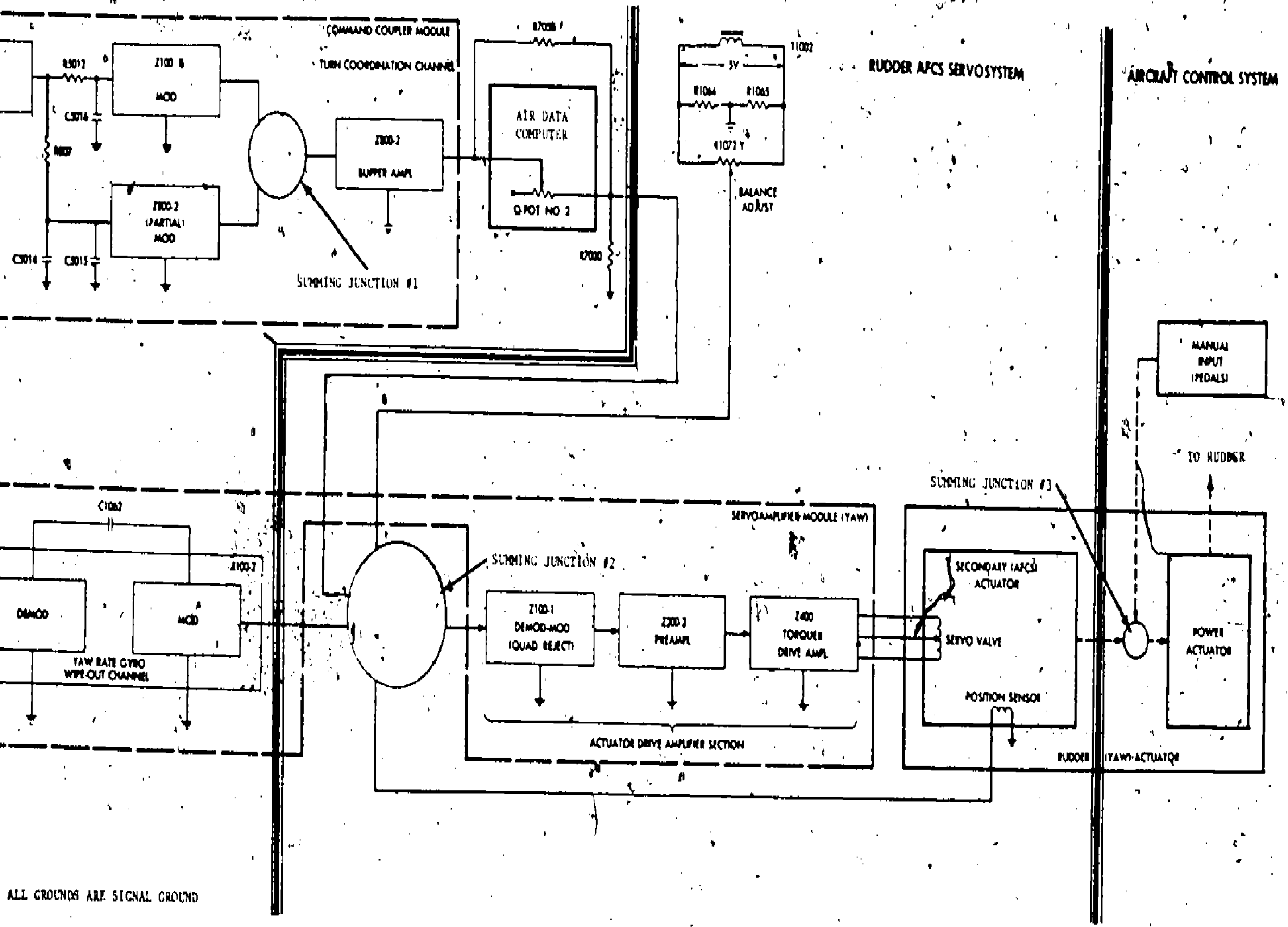

208.157

Figure 7-19.—Rudder axis signal flow diagram.

(input summing junction 2). The wipe-out channel is a high pass filter that eliminates yaw damper opposition to sustained manual and automatic turn commands. The wipe-out is accomplished by converting the sensor ac signal to a dc signal in the demodulator section of demodulator-modulator Z100-2 and applying it to a 2-second RC lead network. The signal is reconverted to 400 Hz in the modulator portion of Z100-2 for parallel summation with other inputs to the AFCS servosystem.

Turn Coordination

Turn coordination functions to provide rudder control proportional to aircraft side accelerations (accelerations along either wing). Side accelerations can occur in straight-and-level flight (from rudder mistrim) or in turns (from the aircraft turn coordination requirements). An ac signal, proportional to aircraft side acceleration, is derived from the center-of-gravity-mounted lateral accelerometer. This signal is fed to the rudder AFCS servosystem via the turn coordination channel of the command coupler module. This channel is divided into two signal path sections—one section for displacement control and the other for integral control. The displacement control commands rudder position proportional to side acceleration, but this alone could not satisfy steady-state coordination control requirements without affecting the short-period stability. Therefore, the displacement gain is augmented by the integral control to satisfy the maneuvering coordination requirements with minimum effect on the short-period response.

The turn coordination channel uses demodulator Z100-8 (fig. 7-19) to convert the lateral accelerometer ac signals to dc signals prior to sectionalizing the signals. The displacement section filters this dc signal with a passive RC network (0.1-second time constant) to remove signal noise and modulates it at Z100-8 to 400 Hz for summation with the integral section output buffer amplifier Z800-2 (summing junction 1). The integral section heavily filters the dc signal with an RC lag network (30-second time constant) and modulates it at Z800-2 to 400 Hz for summation with the displacement signal at summing junction 1. The combined coordination signal is amplified at Z800-2, shaped, fed through the data computer dynamic-pressure control, and summed with the wiped-out yaw rate gyro signal at the input to the AFCS servosystem (summing junction 2). The air data computer parameter control is a 50,000-ohm potentiometer in which the resistance increases linearly with dynamic pressure (q). The low-dynamic-pressure end of the potentiometer (zero-resistance) is tied to signal ground through resistor R7020 and is tied to the potentiometer arm through resistor R7058. The values of resistors R7020 and R7058 may be varied to shape the control gain parameter as required. The control gain that results is inversely proportional to dynamic pressure.

FLAPERON AXIS SIGNAL OPERATION

Eight primary functions are provided by the flaperon axis as follows:

1. Roll damper.
2. Roll attitude synchronization.
3. Roll attitude hold.
4. Heading hold.
5. TPQ-10 commands.
6. Ballistic computer set roll commands.
7. Return to level.
8. Control stick steering.

Selection of these functions is governed by the switches on the controller, the TPQ-10 engage switch on the ground controlled bombing system panel, or by application of manual forces to the aircraft control stick. The flaperon axis signal flow diagram (fig. 7-20) presents signal flow from sensors to the flaperon control surface. The combined servo and control system is a surface-positioning device where sensor and control inputs to summing junction 7 command surface position.

The flaperon servosystem AFCS functions similarly to the rudder AFCS servosystem in that electrical inputs (summing junction 7, fig. 7-20) result in actuator displacement. However, the flaperon servosystem is physically different from the rudder servosystem. There are two

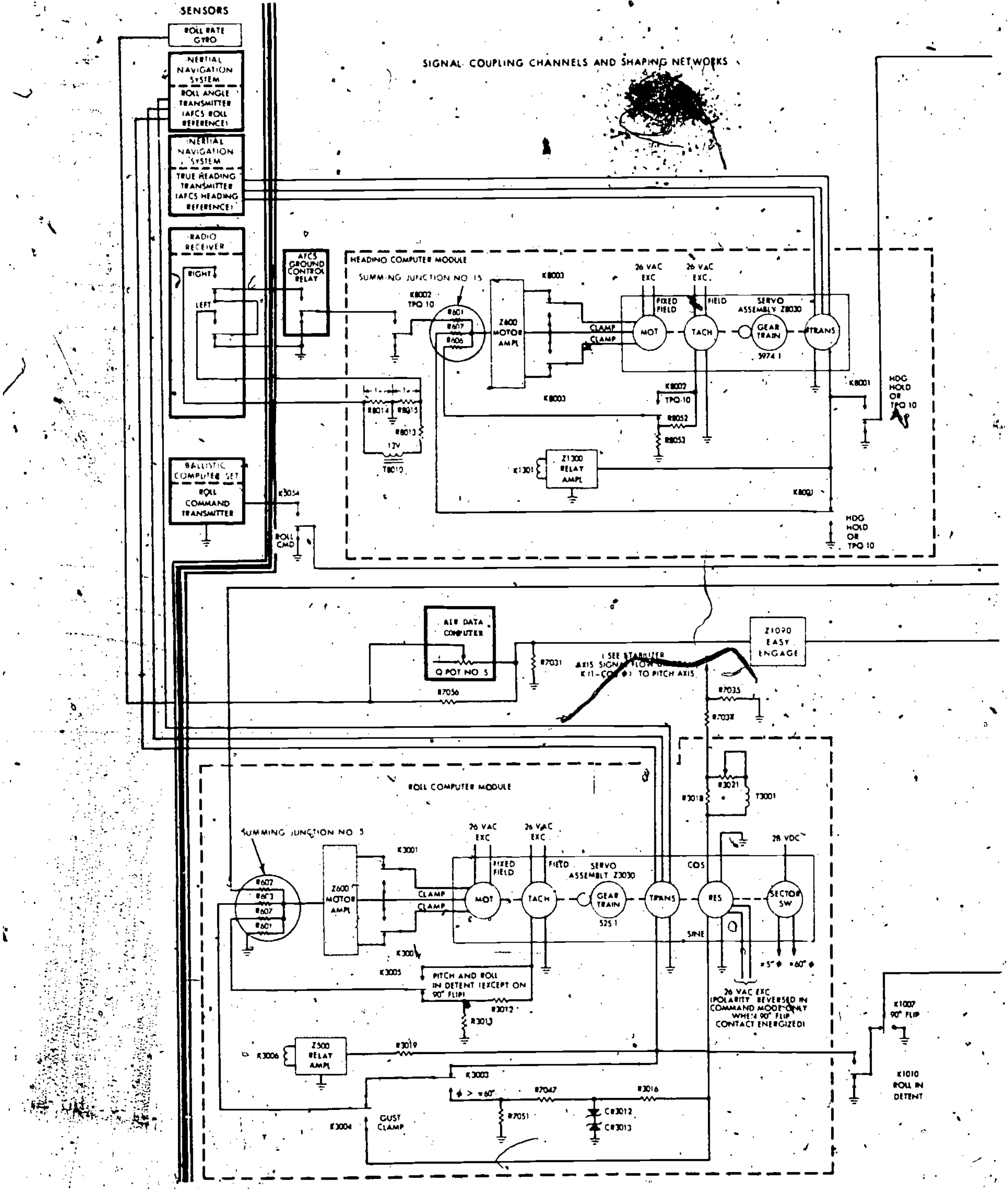

208.158

Figure 7-20.—Flaperon axis signal flow diagram.

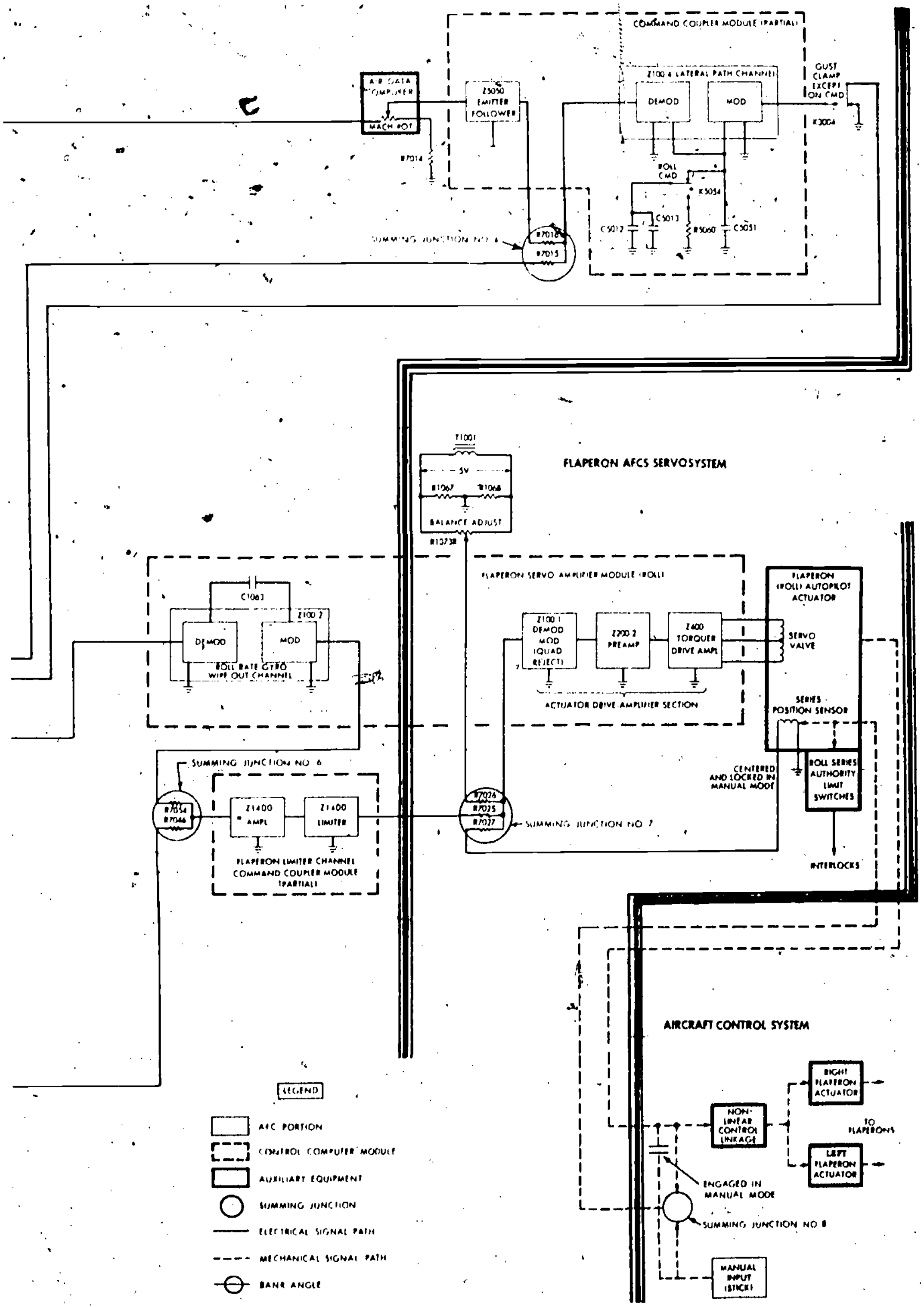

208.158.1

Figure 7-20.—Flaperon axis signal flow diagram—Continued.

identical power actuators associated with the flaperon control system—one to power each set of flaperons, and an autopilot actuator which drives the flaperon power actuators. The autopilot actuator is capable of only manual and series operation.

The flaperon power actuators operate with mechanical feedback so that AFCS or manual inputs result in a proportional actuator displacement. The control linkage between the autopilot actuator and the power actuators restricts operation of the power actuators so that AFCS or manual stick inputs deflect only one set of flaperons (right or left) at any one time. The phase of the AFCS electrical input signal determines which flaperon power actuator operates.

Unlike the rudder system, the manual stick input is applied through the position sensor within the actuator. The relative position of the stick and the sensor (summing junction 8) generates an electrical signal which is algebraically added to AFCS inputs at the servoamplifier (summing junction 7). The AFCS flaperon travel limit (±12.5° about the engaged position) is established by the flaperon limiter Z1400. If the surface authority limit is exceeded (due to a malfunction of series mode limiter Z1400), one of the two autopilot actuator flaperon authority limit switches is actuated. The contacts of these switches are located in series with the holding solenoid of the ON-OFF switch. Actuation of either flaperon authority limit switches will cause the ON-OFF switch to drop out to the OFF position, thereby disengaging all automatic control.

The flaperon servosystem balance potentiometer (R1073R) signal is adjusted to compensate for the electrical and mechanical imbalances at initial system installation and during specified maintenance procedures. This phase-reversible signal is injected at summing junction 7.

Stability Augmentation Mode

Stability augmentation mode engagement releases the series link lock on the autopilot actuator, allowing series type automatic flaperon axis control to provide roll damping. Roll attitude and heading synchronization operate to automatically synchronize the flaperon axis to the roll attitude and heading of the aircraft during the stability augmentation mode and prior to the attitude hold mode.

ROLL DAMPER.—The roll damper function provides a flaperon deflection (rolling moment) proportional to and opposing aircraft angular roll rate. The stability sensor for the roll damper is the roll rate gyro (fig. 7-20). The sensor output is parameter controlled, shaped in the roll rate gyro wipe-out channel, and then limited before being inserted into the flaperon AFCS servosystem (input summing junction 7). The sensor signal is fed through the air data computer dynamic-pressure control. Operation of the air data computer parameter control was previously discussed.

The parameter-controlled roll rate signal is applied through easy engage circuit Z1090 to the wipe-out channel. The easy engage circuit removes the roll damper signal when the control stick is moved laterally out-of-detent. When the control stick is returned to detent, the roll damper signal is reapplied smoothly to the desired level through the easy engage circuit.

The wipe-out channel is a high pass filter that eliminates roll damper opposition to sustained bank commands (manual and automatic). The wipe-out is accomplished by converting the sensor ac signal to a dc signal in the demodulator section of demodulator-modulator Z100-2 and applying it to a 2-second RC lead network. The signal is reconverted to 400 Hz in the modulator portion of Z100-2 for parallel summation with other inputs to amplifier-limiter Z1400 (summing junction 6). The shaped roll rate signal is amplified and limited by amplifier-limiter Z1400 and parallel summed with other inputs (summing junction 7) to the AFCS servosystem. The limiter portion of Z1400 limits the AFCS servo input to the actuator drive amplifier so that the flaperon surface deflection does not exceed the established flaperon limits.

ROLL ATTITUDE SYNCHRONIZATION.—The roll attitude reference for the AFCS is obtained from the back-to-back coupling of the inertial navigation system roll attitude transmitter to the roll computer control transformer. The roll computer amplifier module (consisting of an electromechanical servo assembly that drives the roll control transformer, an electrical sine-cosine resolver, and roll attitude sector switches) provides continuous roll attitude synchronization prior to and during the stability augmentation mode. The control transformer senses changes in the aircraft roll attitude and develops a proportional error signal.

This signal is fed to the roll computer motor amplifier input (summing junction 5) via deenergized relays K3003 and K3004. The output of the motor amplifier drives the roll computer servo assembly until the control transformer output is nulled. A portion of the servo assembly tachometer signal, whose output voltage is proportional to motor speed, is parallel summed with the control transformer input to damp the servo loop. The roll computer servo assembly is aligned so that its shaft position (relative to the inertial navigation system resolver) and its sector switch orientation correspond directly to aircraft roll attitude from level flight.

HEADING SYNCHRONIZATION.—The heading reference for the AFCS is obtained from the back-to-back coupling of the inertial navigation system heading reference transmitter to the AFCS heading computer control transformer. The heading computer amplifier (an electromechanical servo assembly which drives the heading control transformer) provides continuous heading synchronization prior to and during the stability augmentation mode. (Heading synchronization is accomplished in all operating modes of the AFCS except heading hold and TPQ-10.)

The control transformer senses changes in aircraft heading and develops a proportional error signal. This signal is fed to the heading computer motor amplifier input (summing junction 15) via deenergized relay K8001. The output of the motor amplifier drives the heading computer servo assembly until the control transformer output is nulled. The heading computer servo assembly shaft position, therefore, corresponds directly to aircraft heading.

The heading synchronization function is monitored continuously and automatically within the heading computer. The control transformer output is coupled to the heading computer relay amplifier (Z1300) which is calibrated to energize its output relay (K1301) whenever the heading synchronization error exceeds ±2°. Contacts of relay K1301 are included in the interlock circuit for the AUTO/STAB-AUG switch. These contacts of synchronization monitor relay K1301 are bypassed when the attitude hold mode is engaged.

Attitude Hold Mode

Selection of the attitude hold mode via the controller AUTO/STAB-AUG switch provides roll attitude hold or heading hold in addition to roll damping. The roll damper function for the stability augmentation mode is identical to the attitude hold mode. Roll attitude synchronization is stopped, and the roll computer control transformer error signals are applied to the AFCS servosystem. The roll attitude existing at the time of attitude hold mode engagement determines the nature of the flaperon control function of the AFCS. These functions are either roll attitude hold or heading hold.

ROLL ATTITUDE HOLD.—The roll attitude hold configuration is engaged when the attitude hold mode is selected and the aircraft roll attitude is greater than 5° and less than 60°. Aircraft roll attitude displacement and rate deviations are sensed and used to proportionately position the flaperons to maintain the reference (engaged) aircraft attitude. Engaging the AUTO/STAB-AUG switch on the controller stops aircraft attitude synchronization and clamps the roll computer (provided the existing aircraft attitude is greater than 5° and less than 60° as sensed by the roll computer position sector switches). This clamped computer position establishes the reference roll attitude. Deviations from this attitude are sensed by the locked roll computer control transformer. Hence, the inertial navigation system roll attitude transmitter detects any aircraft roll attitude change, which is then transformed to a proportional ac signal by the control transformer. This roll attitude deviation signal is fed through energized relay K1010 to the input of the amplifier-limiter Z1400 (summing junction 6), where it is amplified and limited. (See fig. 7-20.) The output from Z1400 is then fed to the flaperon AFCS servosystem (summing junction 7) and commands flaperon deflection in a sense to maintain the reference attitude.

The use of a relatively high attitude gain, required to maintain tight attitude control, dictates the need for aircraft attitude rate information for mode stabilization. Therefore, signals proportional to roll rate, derived from the roll rate gyro, are summed with the control transformer attitude signals (summing junction 6) to provide the phase lead required for stable system operation. The roll rate gyro signal is parameter controlled and then shaped in the roll rate gyro wipe-out channel ahead of the amplifier-limiter input summing point to eliminate opposition to sustained roll rate commands. The wipe-out circuitry (high pass filter) is identical to that used in the rudder axis.

The upper limit on roll attitude hold is 60° either side of level flight. If the aircraft attitude is greater than 60° when the attitude hold mode is selected, the AFCS will roll the aircraft automatically back to, and hold, 60° roll attitude. Attitude synchronization is continuous for all aircraft attitudes, thereby aligning the roll computer shaft to the actual aircraft attitude. The roll computer resolver is connected directly to the electromechanical servo assembly shaft in a manner to produce an output from the sine winding that is a measure of shaft rotation, and hence of roll attitude displacements from zero roll attitude (wings level).

If the aircraft attitude is greater than 60° when the attitude hold mode is selected, attitude synchronization stops and the roll computer remains unclamped because of the interlocks associated with the roll computer attitude sector switches. The resolver sine output is inserted into the roll computer (summing junction 5) in place of the control transformer signal (relay K3003 is energized) and is summed with the full tachometer output (relay K3005 is energized). (See fig. 7-20.) Zener diodes CR3012 and CR3013 are used to limit the resolver sine signal to a value approximately equivalent to the resolver output at 45° of roll. The divided sine signal, in conjunction with the full tachometer feedback, establishes the computer motor roll-back rate in a direction dependent on resolver signal phase. As the motor is driven, the control transformer develops an output signal to command flaperon deflection (via energized relay K1010 and the servosystem) which rolls the aircraft back toward 60°. The roll computer is clamped by action of the attitude sector switch interlocks when a roll computer shaft position of 60° is achieved. The aircraft continues to roll until its attitude becomes 60° and the control transformer output is nulled. This attitude is maintained in the same manner as that previously described for roll attitude hold.

HEADING HOLD.—Selection of the attitude hold mode with the aircraft roll attitude, right or left, between 0° and 5° results in automatic wing leveling and heading hold engagement. Heading hold is accomplished by commanding bank angle proportional to deviations in aircraft heading from the reference. The roll computer attitude sector switch detects the aircraft roll attitude between 0° and 5° and supplies excitation continuity to interlock relays. Contacts of these relays open the roll computer motor clamp circuitry, insert the roll computer sine output to the input of the motor amplifier, energize the heading computer clamping circuit, and select the clamped heading computer control transformer heading error signal.

The roll computer is driven by the unlimited sine resolver output in a direction to reduce its output to zero, which corresponds to 0° of roll attitude. The roll computer control transformer produces the command input to the AFCS servosystem to provide proportional flaperon deflection for wing leveling. As the wings level, heading error signals, derived from the heading computer control transformer, are fed to the input of the roll computer (summing junction [illegible] via the air data computer Mach potentiometer and the command coupler lateral path channel. This input drives the roll computer servo assembly until the sine resolver output cancels the heading input. The angle through which the roll computer servo assembly shaft (and, therefore, the control transformer) rotates is directly proportional to heading error.

The aircraft (and the inertial navigation system roll transmitter) rolls in response the control transformer error to reduce the error to zero. The resulting bank angle is in a direction to reduce the heading error. Since the established bank angle is proportional to heading error, the bank angle is reduced as the heading error is decreased until a wings-level condition is established at the reference heading.

The lateral path channel in the heading loop provides heading error signal filtering and limiting. The ac heading signal error is applied at summing junction 4, converted to dc by the standard demodulator (part of Z100-4), filtered with an RC lag network having a 2-second time constant, and modulated to 400 Hz for signal summation at the input to the roll computer (summing junction 5). (See fig. 7-20.) The maximum output of the modulator (part of Z100-4) is established by its excitation voltage. In this application, full output of this modulator (lateral path channel) is equivalent to 30° of bank. Lateral path channel input command authority is thereby limited to a maximum of 30° of bank. A Mach potentiometer and an emitter-follower (Z5050) are located between the heading error output and the lateral path channel input. The Mach potentiometer, located in the air data computer, continuously adjusts the heading gain as a function of aircraft Mach number to obtain constant dynamic response over the airspeed range. At low airspeeds, gain of the command coupler module is increased to cause an increased control surface movement. The emitter-follower (Z5050) provides an impedance match between the Mach number potentiometer and the lateral path channel input, thus allowing the heading gain to be a linear function of Mach number.

Altitude and Mach Hold Mode

The altitude and Mach hold function is a longitudinal control function (stabilizer axis). The flaperon control axis functions independently of the altitude and Mach hold control. The lateral mode (attitude hold or heading hold) existing at the time of altitude and Mach hold engagement is retained.

TPQ-10 MODE

The TPQ-10 mode provides a ground controlled vectoring (or steering) capability for close support bombing attack. The system includes a ground radar, a ground computer, ground datalink transmitter, radio receiver, and an airborne X-band beacon (for low-angle and long-range tracking). During TPQ-10 mode control, the aircraft (tracked by radar) is always under ground command, which may require a ~~direct run to target or commanded loiter. Input~~ information to the AFCS consists of the closure of one of two sets of relay contacts of the radio receiver. One set of relay contacts commands correction to the left; the other set commands correction to the right. Closure of either relay is intended to command a correction of from 0.1° to 3.0° per pulse. Relay closure signals, when required, are transmitted at a rate of 1 per second.

Selection of the TPQ-10 mode is accomplished by the pilot, using the TPQ-10 engage switch (solenoid-held toggle switch) on the ground controlled bombing system (GCBS) control panel. In order to engage the TPQ-10 mode of operation, the AFCS must be in the attitude (heading) hold mode or command mode, with the aircraft bank angle less than 5°. Selecting the TPQ-10 mode while in command mode drops out the command (CMD) switch, thus disengaging the command mode. If the aircraft bank angle is greater than 5°, the TPQ-10 engage switch will not hold in and the roll attitude hold mode will be retained.

When the appropriate conditions are met and the TPQ-10 mode is engaged, relays K8001 and K8002 are energized. These relays unclamp the heading computer, switch the heading computer control transformer heading error signal to the air data computer Mach potentiometer, and convert the heading computer to an electromechanical integrator (by removing the heading control transformer feedback loop and selecting maximum tachometer output). The radio receiver output signal is inserted into the heading computer (summing junction 15), through the TPQ-10 AFCS/ground control relay. (The relay prevents interaction between other TPQ-10 ground stations transmitting to other aircraft at the same carrier frequency but different code, and is energized by a radio receiver coding section in conjunction with the pilot's manual selection of the proper code.)

Out-of-phase and in-phase 400-Hz excitation voltages to the radio receiver left-right relays are supplied by transformer T8010, located in the heading computer. A ground command to change heading results in the closure of one of the radio receiver relays for a length of time determined by the ground based computer. Integration of the signal input pulse is performed by the heading computer at a rate of 3° of heading computer shaft rotation per second. The heading computer control transformer is thereby rotated, producing a heading error signal which is fed to the input of the roll computer (summing junction 5) via the air data computer Mach potentiometer and the command coupler lateral path channel. Continual heading corrections may be applied to the aircraft by ground transmitted signals, resulting in radio receiver output pulses of 1/30- to 1-second duration, corresponding to 0.1° to 3° of heading change at a rate of 1 pulse per second.

Command Mode

Selection and engagement of the command mode disables roll attitude synchronization and applies roll computer transformer error signals to the AFCS servosystem. Three lateral command mode control phases are provided in the AFCS: a roll command phase, a return to level phase, and an automatic landing system (ALS) data link command phase. The CMD solenoid-held toggle switch on the AFCS controller selects the command mode. Selection of the roll command return to level or ALS data link command phase is accomplished by energizing the appropriate AFCS interlock circuits with 28-volt dc interlock signals generated by the ballistic computer. Generally, when the command mode is selected, the roll command phase is assumed. The AFCS operates in the roll command phase until a signal (28 volts dc) is fed to the AFCS from the ballistic computer. The AFCS interlocks use this 28-volt dc signal to establish the return to level or ALS data link phase. The following discussion presents the AFCS command mode.

ROLL COMMAND PHASE.—To establish the roll command phase, the AFCS must be in the attitude hold mode (or a higher mode) prior to engaging the CMD switch on the controller. Engagement of the CMD switch with the AFCS in the TPQ-10 mode of operation drops out the TPQ-10 engage switch and results in disengagement of the TPQ-10 mode. Also, a 28-volt dc roll-command-available signal from the ballistic computer must be present in order to latch the CMD switch. When the roll command phase is engaged, relay K5054 (fig. 7-20) is energized, switching the roll command transmitter output into the lateral path channel input through resistor R7015. At this point, the AFCS functions in the same manner as the heading hold mode, except that the lateral path channel filter time constant is changed from 2 seconds to 0.06 second, the Mach number potentiometer is bypassed, and the heading computer synchronizes aircraft heading. The difference between aircraft heading and desired heading is computed by the ballistic computer and inserted into the AFCS as a roll command. This input drives the roll computer servo assembly until the sine resolver output cancels the roll command. As stated in the heading hold discussion, AFCS bank commands are limited to a maximum of 30° by the lateral path channel output voltage limit. The ballistic computer-commanded maneuvers may consist only of relatively simple roll commands to guide the aircraft to its target, or they may take the form of complex operations such as a LAB (low altitude bombing) maneuver. The discussion thus far pertains to the relatively simple roll command maneuver.

If a LAB maneuver is involved, then the following discussion is applicable. The LAB maneuver requires ballistic computer sequential control of both lateral and longitudinal aircraft axes to pitch the aircraft up and over longitudinally and to return it to a wings-level condition laterally. The flaperon axis return to level phase rolls the aircraft back to within 5° of wings-level attitude and then initiates the pitch-level phase (in the stabilizer axis) to return the aircraft to a pitch-level condition.

The LAB sequence of operations starts with the AFCS in the command mode. Ballistic computer control signals in the lateral path channel guide the aircraft to its target. Stabilizer axis control in the form of g-commands (also from the ballistic computer) is active. At the proper time (determined by the ballistic computer), the aircraft is commanded to start its up-and-over maneuver. As the aircraft reaches a pitch angle of 90°, inertial navigation system slew is intiated and the 90°-flip sensor on the INS attitude reference sends a 28-volt dc signal to the AFCS. This interlock signal energizes relay K1007 (fig. 7-20), removing roll computer control transformer error signals from the AFCS servosystem. Relay K3004 is also deenergized, which simultaneously removes lateral path channel inputs from the roll computer and reverts the roll computer to its roll attitude synchronization configuration, aligning the roll computer to the slewed INS reference.

At the same time, the excitation to the electrical resolver is reversed so that its phase is correct for inverted flight. When the roll computer has aligned itself to within 2° of the INS reference, the 90°-flip relay K1007 is deenergized, restoring roll computer control transformer error signals to the AFCS servosystem. Also, relay K3004 is energized, thus reverting ballistic computer control to the roll axis. The reversed phase excitation to the electrical resolver remains. The aircraft continues along the flightpath computed by the ballistic computer and in an inverted attitude. When the aircraft attitude is within 5° of the proper pitch angle, the ballistic computer removes the g-command longitudinal input. In order to complete the LAB maneuver, the aircraft must be rolled back to a straight and level attitude. Therefore, immediately after the ballistic computer g-command is removed from the AFCS, the ballistic computer generates a 28-volt dc interlock signal pulse to initiate the return-to-level phase.

RETURN-TO-LEVEL PHASE.—When the aircraft is in position to return to level (as determined by the ballistic computer), a 28-volt dc signal pulse is fed from the ballistic computer to the AFCS interlock system that establishes the return to level phase. In the flaperon axis, this 28-volt dc signal is used to energize relay K3003 and to deenergize relays K3004 and K5054. (See Fig. 7-20.) Thus, when the roll computer is switched to the return-to-level configuration, the aircraft rolls back to its normal flight attitude reference. Relays K3003 and K3004 complete the roll computer loop around the electrical sine resolver through the roll rate limiter composed of diodes CR3012 and CR3013 and resistor R3016. The limited resolver sine output is inserted into the roll computer (summing junction 5) and is summed with the full tachometer output. The algebraic sum of the two signals establishes the computer motor roll-back rate. The direction of motor rotation depends on the initial resolver output phase. As the motor is driven, the control transformer develops an output signal to command flaperon deflection via the AFCS servosystem. The aircraft rolls in response to the control transformer signals so that the control transformer output is nulled. Relay K5054 removes the ballistic computer roll commands from the input of the lateral path channel. The roll computer sector switch detects when the aircraft has rolled back to 5° and supplies excitation continuity to the interlock relays. Contacts of these relays bypass the roll limiter in the roll computer and insert the ballistic computer roll commands through the lateral path channel into the roll computer. The lateral axis configuration reverts to its initial condition, that is, the roll command phase.

ALS DATA LINK PHASE.—The ALS data link phase is established in a manner identical to that used to establish the roll command phase. The essential difference between the two is in the AFCS interlocking circuits. When the roll command phase is operative, the pilot may assume manual control of the aircraft (if he so desires) by inserting commands through the stick without the necessity of reengaging the CMD switch on the controller at the conclusion of manual control inputs. The AFCS interlocking circuits prevent this from being done in the ALS data link phase. Hence, it is then necessary for the pilot to reengage the CMD switch and thus reassume the ALS data link phase if manual control is used.

The ALS automatically tracks approaching aircraft with radar. The instantaneous position coordinates of the aircraft are supplied by the radar to a carrier-based flightpath computer that compares actual flightpath to a desired flightpath. Control signals are transmitted by radio to the aircraft for both lateral and longitudinal corrections as a function of the error between actual and desired flightpath. This radio information is converted to electrical error signals in the ALS data link (decoder-encoder) in the aircraft to supply command signals to the AFCS. Lateral control signals are applied to the lateral path channel. Longitudinal control signals are applied to the altitude, Mach, and pitch command channel. Ballistic computer 28-volt dc interlock signals, fed to the AFCS interlocks, set up the appropriate signal flow configurations to maintain control throughout the ALS approach and landing operation. Lateral axis control is identical to that used in the roll command phase.

Return-to-Level Mode

The return-to-level mode is selected by engaging the return-to-level pushbutton switch on the controller. In order to establish the return-to-level mode, the AFCS must be in the attitude hold, heading hold, TPQ-10, altitude hold, or Mach hold mode prior to engaging the return-to-level switch. With the AFCS in the TPQ-10 mode, engagement of the return-to-level mode disengages the TPQ-10 mode and provides heading computer synchronization on aircraft heading. In the heading hold mode, engagement of the return-to-level mode unclamps the heading computer and also results in the heading synchronization configuration. Roll attitude synchronization is disabled, and roll computer control transformer error signals are applied to the AFCS servosystem. Two return-to-level phases are provided in the AFCS—a roll-level phase and pitch-level phase.

Starting from any roll attitude, the roll return-to-level function automatically rolls the aircraft to a wings-level condition and concludes the operation by putting the AFCS flaperon axis control in the heading hold mode.

Control Stick Steering Mode

The AFCS is implemented for control stick steering; that is, pilot-applied stick force causes the system to revert to the stability augmentation mode while the aircraft is maneuvered manually. With the attitude hold mode engaged, application of lateral stick force (1.1±0.2 lb) sufficient to actuate the force-sensitive switches in the stick removes the roll attitude reference and the roll rate damper ~~from the system, deenergizes relay K1010 (fig.~~ 7-20), and the roll and heading computers revert to the synchronization mode. Continued force results in a manual input to the flaperon control system (summing junction 8) producing flaperon deflection and an aircraft roll rate. While the stick force is applied, the AUTO/STAB-AUG switch on the controller remains engaged, and the AFCS provides yaw and pitch damper control. The roll damper function is deactivated by the easy engage circuit Z1090 to eliminate damper resistance to the commanded roll rate. Also, the roll damper signal is reapplied smoothly through the easy engage circuit Z1090. The easy engage circuit Z1090 allows the roll rate signal to increase to the desired level with a time constant of 0.32 second. In the flaperon axis, the manually commanded roll attitude is continuously synchronized (as in heading) as described previously. If attitude hold or the command mode had been selected prior to the application of lateral stick force, their respective engage switches would not disengage with stick force application. Upon release of the stick, the attitude hold or command mode is automatically reengaged and normal operation of the particular control mode is resumed (except for the data link phase). If lateral stick force is applied while in the TPQ-10 mode, the TPQ-10 engage switch will drop out, thereby disengaging the TPQ-10 mode. Subsequent release of the stick reestablishes the attitude hold mode.

STABILIZER AXIS SIGNAL OPERATION

Nine primary functions are provided by the stabilizer axis:

1. Pitch damper.
2. Pitch attitude synchronization.

3. Pitch attitude hold.
4. Automatic pitch trim.
5. Attitude hold.
6. Mach hold.
7. Command mode.
8. Return-to-level.
9. Control stick steering.

NOTE: A general description of the command and return-to-level modes was given in the flaperon axis discussion and is not repeated in this section.

Selection of the stabilizer functions is controlled by the switches on the controller or the application of manual forces to the aircraft control stick. The stabilizer axis signal flow diagram (fig. 7-21) presents stabilizer signal flow from the sensors to the stabilizer control surface.

As in the other axes, the combined servo- and control-system is a surface-positioning device where sensor inputs to summing junction 13 command position of the control surface.

The stabilizer axis servosystem functions similarly to the rudder and flaperon AFCS servo-systems in that electrical inputs (summing junction 13) result in stabilizer displacement. However, the stabilizer servosystem is physically different from either the rudder or the flaperon servosystem. The single stabilizer electro-hydraulic actuator is capable of manual, series, or parallel operation. The series and parallel modes are the AFCS operating modes of the actuator.

In the series mode, the power actuator operates with mechanical feedback so that electrical or manual inputs result in a proportional actuator (and surface) displacement. In this configuration, stabilizer actuator electrical inputs deflect the stabilizer control surface without moving the control column. Similar to the rudder axis, the stabilizer series mode mechanically sums the manual and electrical inputs to the power actuator (summing junction 14) and has an electrical control surface authority limit (1.2°) about the engaged position. The manual surface authority is mechanically limited to command 2° up, 10.75° down in the clean condition (flaps and gear up), and 2° up, 23.75° down in the landing condition (flaps or gear down).

The parallel mode is assumed when a 28-volt dc solenoid, internal to the actuator, is energized. This action converts the actuator to the parallel mode configuration and allows electrical inputs to control the stabilizer position. Energizing this solenoid activates a hydraulic clamp that centers and locks the manual input linkage to the actuator output and removes the mechanical feedback from around the power actuator. In this configuration, manual inputs can be inserted only by overriding the manual lockout device. Electrical inputs are fed, via the AFCS, to the actuator. The hydraulic clamp deactivates the series sensor. In order to restore the combined servo and control system to a positioning type system, the parallel position sensor is clutched into the servo loop and provides an ac signal proportional to stabilizer position.

This ac signal is fed back to the AFCS servosystem input (summing junction 13). The clutched surface position transducer supplies an output only in the parallel mode configuration. The transducer clutch and the actuator parallel mode solenoid are energized simultaneously by the AFCS interlock system in the g-command or pitch-command phase of the command mode, or when the return-to-level mode is selected. Control signal inputs to the stabilizer AFCS servosystem (summing junction 13) are canceled by the transducer as the surface is deflected proportionately. In this mode the manual control column is connected directly to the surface, and surface deflections resulting from electrical control signals move the control column proportionally.

The stabilizer servosystem has a balance potentiometer (R1071P) similar to that used for the other axes. It is adjusted at initial system installation and at subsequent specified maintenance operations to compensate for electrical and mechanical imbalances. This signal is injected at summing junction 13.

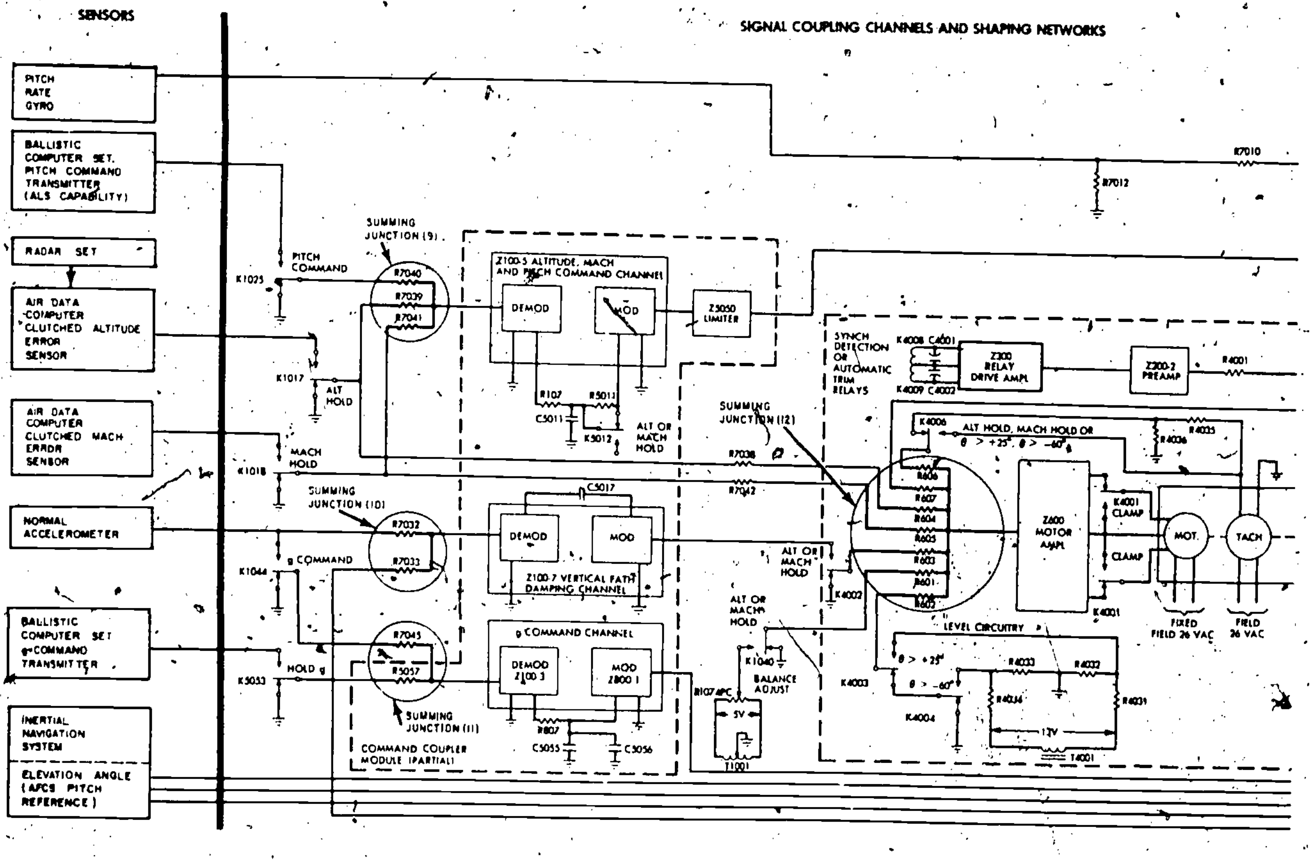

208.160

Figure 7-21.—Stabilizer axis signal flow diagram.

Stability Augmentation Mode

Stability augmentation mode engagement energizes the actuator solenoid valve to permit hydraulic flow and releases the mechanical lock on the stabilizer actuator, allowing series type automatic stabilizer axis control to provide pitch damping. Pitch attitude synchronization operates to automatically synchronize the stabilizer axis to the pitch of the aircraft during the stability augmentation mode and prior to the attitude hold mode.

PITCH DAMPER.—The pitch damper function provides a stabilizer deflection proportionate to and opposing aircraft pitch rate. The primary function of the pitch damper is to dampen pitch-axis oscillation. The stability sensor for the pitch damper is the pitch rate gyro. The sensor output is shaped in the pitch rate gyro wipe-out channel before being inserted into the stabilizer AFCS servosystem (input summing junction 13). The air data computer parameter control is identical in operation as previously discussed.

The wipe-out channel is a high-pass filter that eliminates pitch damper opposition to sustained pitch rates. The wipe-out is accomplished by converting the sensor ac to dc in the demodulator section of demodulator-modulator Z100-2 and applying it to a 2-second RC lead network. The signal is reconverted to 400 Hz in the modulator portion of Z100-2 for parallel summation with other inputs to the actuator drive amplifier (summing junction 13).

PITCH ATTITUDE SYNCHRONIZATION.—The pitch attitude reference for the

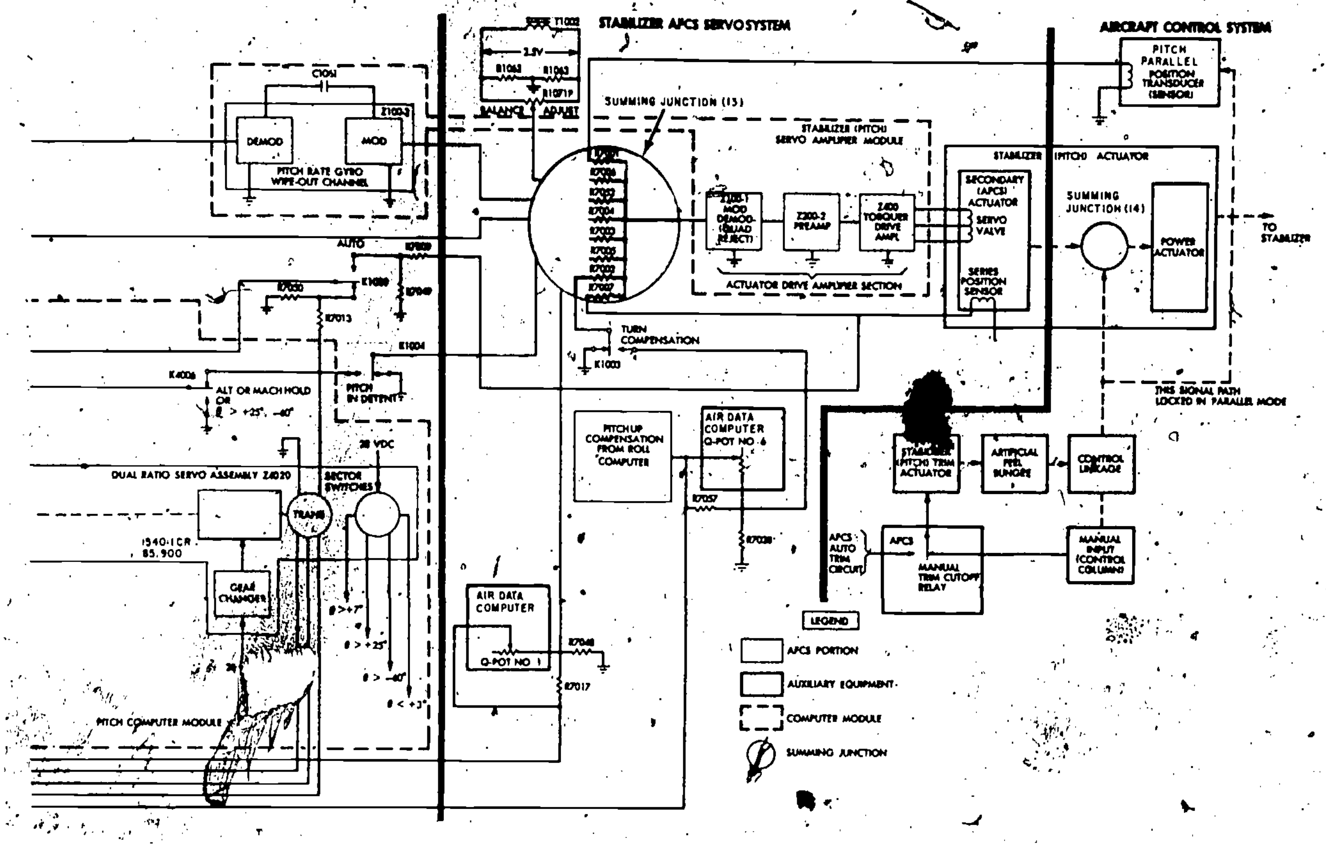

208.160.1

Figure 7-21.—Stabilizer axis signal flow diagram—Continued.

AFCS is obtained from the back-to-back coupling of the inertial navigation system pitch attitude transmitter to the AFCS computer amplifier (pitch computer) control transformer. The pitch computer, consisting of an electromechanical dual ratio servo assembly which drives the pitch control transformer and position sector switches through a dual ratio gear train, provides continuous pitch attitude synchronization prior to and during the stability augmentation mode. The control transformer senses changes in the aircraft pitch attitude and develops a proportionate error signal.

This error signal is fed to the input of the pitch computer motor amplifier (summing junction 12, fig. 7-21) via deenergized relay K4006. The motor amplifier output drives the 2-phase instrument servomotor through the high-speed gear configuration, maintaining the control transformer output at null. Integral with the motor is a tachometer that generates a voltage proportionate to motor speed. The tachometer output voltage is summed with the control transformer input to damp the servo loop. The pitch computer is aligned relative to the INS and position sector switch orientation, so that its shaft position directly corresponds to aircraft pitch attitude from level flight. The functions of the pitch computer sector switches and the low-speed gear configuration are not required in the stability augmentation mode.

In stability augmentation mode, the pitch synchronization function is continuously and automatically monitored within the pitch computer. The control transformer output is coupled to a phase-sensitive relay amplifier via deenergized relay K1009. The relay amplifier energizes either elay K4008 or K4009 (depending on signal input phase) if the pitch computer fails to synchronize to within 2° of the aircraft's pitch attitude as sensed by the control transformer. When either relay is energized, the attitude hold mode cannot be energized. If synchronization is satisfactory and the attitude hold mode is engaged, relay K1009 is energized and the phase-sensitve relay amplifier is then switched to function as the automatic pitch trim control circuitry.

Attitude Hold Mode

Selection of the attitude hold mode allows automatic stabilizer control to provide pitch damping and pitch attitude hold. The attitude hold mode is identical to the pitch damper function previously described for the stability augmentation mode. Pitch attitude synchronization is stopped, and the pitch computer control transformer error signals are applied to the AFCS servosystem. The aircraft pitch attitude is maintained by commanding stabilizer position proportional to pitch attitude displacement and rate errors. Automatic pitch trim functions in this mode and in all subsequent controller-engaged, series-actuator operating modes.

PITCH ATTITUDE HOLD.–The pitch attitude hold configuration is engaged when the attitude hold mode is selected. Aircraft pitch attitude displacement and rate deviations are sensed and used proportionally to position the stabilizer to maintain the reference (engaged) aircraft attitude. Engaging the AUTO/STAB-AUG switch on the controller disables attitude synchronization by clamping the pitch computer. Clamping is accomplished by short-circuiting the servomotor control field (relay K4001 energized). The clamped computer position establishes the reference attitude. Deviations from this attitude are sensed by the locked pitch computer control transformer. The INS pitch attitude transmitter detects the aircraft attitude changes which are then transformed to proportional ac signals by the control transformer.

These pitch attitude deviation signals are fed to the input of the stabilizer AFCS servo system (summing junction 13) through energized relay K1004 and command stabilizer deflection in a sense to maintain the reference attitude. (See fig. 7-21.) The use of relatively high attitude gains, required to maintain tight attitude control, dictates the need for aircraft attitude rate information for mode stabilization. Therefore, a signal proportionate to pitch rate is derived from the pitch rate gyro and summed with the control transformer attitude signals (summing junction 13) to provide the phase lead (and, therefore, damping) required for stable system operation. The pitch rate gyro signal is passed through the pitch rate gyro wipe-out channel ahead of the summing point to eliminate opposition to sustained pitch rate commands. The wipe-out circuitry (high-pass filter) is identical to that used in the rudder and flaperon axes.

The upper limits of pitch attitude hold are +25° pitchup and -60° pitchdown from level flight. If the aircraft pitch attitude is greater than either limit when the attitude hold mode is engaged, it will automatically pitch back to either +25° or -60°, depending on the respective limit exceeded. Attitude synchronization is continuous for all attitudes, thereby aligning the pitch computer shaft with the actual aircraft attitude. When the AUTO/STAB-AUG switch is engaged, the attitude sector switches (connected to the pitch computer shaft) energize relay K4003 if the pitch attitude is greater than +25° up, or relay K4004 if the pitch attitude is greater than -60° down. Relay K4006 is energized, removing the control transformer input to the pitch computer, thereby stopping synchronization and switching to full tachometer feedback. Relay K1004 is energized, inserting the control transformer output into the AFCS servosystem (summing junction 13); and the level circuitry voltage is inserted into the pitch computer (summing junction 12). The phase of the level voltage depends on which relay (K4003 or K4004) is energized.

The level voltage establishes the pitch computer motor rotation rate which commands an aircraft pitch rate towards level via the control transformer input to the AFCS servosystem and the aircraft control system. The level voltages are adjusted to provide a maximum normal incremental acceleration of approximately +2.5 g when leveling to -60° and -0.8 g when leveling to +25° (in the high speed flight condition). The pitch computer is clamped and the level voltage removed when the shaft position of the sector switches indicates +25° or -60°. The aircraft will pitch until its attitude is in agreement with the pitch computer shaft position and the control transformer output is nulled, recentering the AFCS servosystem. The pitch attitude at either +25° or -60° is maintained in the same manner as described for pitch attitude hold.

AUTOMATIC PITCH TRIM.—Pitch trim is provided automatically when the attitude hold mode is engaged. Automatic trim is operative for all series operating modes of the stabilizer actuator with the exception of stability augmentation. The automatic pitch trim function relieves the AFCS from holding a pitch error and from holding AFCS actuator displacement to provide the sustained stabilizer deflections required to compensate for trim shifts due to changing flight conditions. This relief is accomplished by repositioning the control column and linkage to hold the required surface through the action of the stabilizer trim actuator on the stabilizer artificial feel bungee. This automatic pitch trim function assures that the stabilizer control system is trimmed. This reduces the possibility of a disengage transient due to mistrim when the attitude hold mode is disengaged.

When the attitude hold mode is engaged, manual trim cutoff relay and relay K1009 are energized. The manual trim cutoff relay switches the input (excitation) to the stabilizer trim actuator from the stick-manual trim button to the AFCS automatic trim circuitry. (See fig. 7-21.) Relay K1009 switches the input to the pitch computer phase-sensitive relay amplifier circuitry from the pitch control transformer output to the AFCS actuator series position sensor output. When the aircraft trim condition alters, due to changes in flight conditions, a pitch attitude change results. The pitch attitude change is sensed by the pitch computer control transformer, which commands stabilizer surface deflection in a sense to maintain the reference pitch attitude. A pitch attitude error (from the reference) proportional to the attitude change results in a steady-state surface deflection. This deflection is sensed by the series position sensor, which produces a proportional output voltage.

The position sensor output is fed to the input of the pitch computer relay amplifier via relay K1009. When the position voltage exceeds the relay amplifier pull-in voltage (equivalent to approximately 0.1° of stabilizer), and depending on the phase of this input (phase determines direction of surface deflection), either relay K4008 or relay K4009 is energized. Contacts of these relays in turn apply 120-volt ac excitation to the low speed windings of the stabilizer trim actuator. The direction in which the electromechanical screwjack trim actuator moves depends on whether up trim or down trim is energized.

The stabilizer trim actuator output moves the aircraft's control column via the stabilizer artificial feel bungee. As noted in the stabilizer aircraft control system discussion, control column movement is summed with the AFCS output at the input to the power actuator. The control column input due to the trim actuator motion commands surface deflection in the same direction as that resulting from the actuator displacement. The increased surface deflection reduces the attitude error, which decreases the signal input to the AFCS servosystem. This decreased signal input returns the actuator towards its neutral position and decreases the series position sensor output. This action continues until the actuator approaches the neutral position. At this point, the position sensor voltage reaches the relay amplifier dropout voltage, thereby stopping the trim actuator. The net result is that the surface position required for trimmed flight is obtained from control column input and the AFCS servosystem operates about its neutral (no input) position.

The stabilizer trim actuator has separate manual and AFCS input windings to provide a two-speed capability. The AFCS automatic trim input has a trim speed approximately one-twentieth of the manual rate. The slower rate associated with automatic trim is required to assure stable system operation.

Altitude Hold Mode

The AFCS provides longitudinal flightpath control to the barometric altitude existing at the time of altitude hold mode engagement. At altitudes below 5,000 feet, the barometric altitude error signal is modified in the air data computer by a radar altimeter climb-dive signal to correct for altitude hold deviations caused by ambient barometric pressure changes. The altitude hold function is accomplished by commanding pitch attitude proportional to altitude displacement, integral, and rate error inputs. The altitude hold mode is selected via the ALT switch on the controller.

Selection of the altitude hold mode energizes relays K1017, K1040, K1070, K4002, and K4006 (fig. 7-21), engages the air data computer altitude sensor clutch, and converts the pitch computer into an electromechanical integrator. Contacts of relay K1017 switch the engaged altitude sensor output into the input of the altitude, Mach, and pitch command channel (summing junction 9), and into the input of the pitch computer (summing junction 12). Contacts of relay K1040 switch the pitch computer balance adjust potentiometer (R1074PC) into the input of the pitch computer (summing junction 12). Relay K4002 couples the vertical path damping channel output into the pitch computer (summing junction 12). Relay K4006 removes the control transformer input to the pitch computer, enabling it to run open loop (integrate), and switches in the full tachometer signal. In addition to breaking the position feedback (removing the control transformer input), the pitch computer reduction gearing is increased (by applying 28 volts dc to the gear changer) from 1,540:1 to 85,900:1 to achieve the required slow integration rate.

An ac signal proportional to altitude displacement from the barometric reference, derived from the clutched, spring-centered transducer in the air data computer, is used to establish the displacement and integral error control signals. The displacement control is accomplished by commanding pitch attitude proportional to the altitude sensor output. The sensor signal is fed through the altitude, Mach, and pitch-command channel to the input of the stabilizer AFCS servosystem. The altitude, Mach, and pitch-command channel filters, and limits the input error signal.

In this channel, the ac sensor signal is demodulated, filtered (2-second time constant RC lag circuit), and modulated to 400 Hz for signal summation at the input to the AFCS servosystem (summing junction 13). Filtering this signal minimizes the angle-of-attack effects on the altitude displacement control signal. The output response from the AFCS servosystem commands stabilizer displacement, which results in an aircraft pitch rate. The aircraft pitch attitude changes until the attitude error signal input (from the pitch computer control transformer) to summing junction 13 cancels the altitude error input, thus returning the surface to neutral and stopping the pitch attitude change. Pitch attitude change, proportional to altitude error, maintains the barometric reference. The maximum pitch attitude command from the altitude displacement signal is limited to ±13.5° of pitch attitude because of the altitude, Mach, and pitch-command channel limiter.

If the altitude hold mode were engaged with the aircraft in other than level flight, and the altitude displacement error were the only control, a sustained altitude error (standoff from the reference) would result. Assuming the aircraft was in a climb at the time of engagement, the altitude hold function would try to maintain the climb attitude, and the altitude error signal would try to change the attitude sufficiently to return the aircraft to the barometric reference. An altitude error sufficient to change the aircraft pitch attitude to level (no further increase in altitude) would be required to cancel the pitch control transformer output resulting from the attitude change (climb to level). Ultimately, an altitude signal and attitude signal would be summed at summing junction 13 to produce a zero input to the servosystem.

Disengagement of the altitude hold mode deenergizes relays K1040, K1070, and K4002. Relay K1070, however, has a time delay circuit which holds it energized for 2 seconds after interlock voltage is removed. One set of relay K1070 contacts applies the full pitch computer tachometer signal to be summed into the pitch computer (summing junction 12) for 2 seconds. During this 2-second period the pitch computer smoothly synchronizes to a null, thus removing the integrator output and providing altitude hold mode easy disengage. Relay K1070 also holds relay K1004 energized for this 2-second period to prevent the pitch computer control transformer output from being switched out of the AFCS servosystem until it is properly synchronized.

The use of relatively high altitude hold gains (required for tight altitude control) and the added lag contributed by the displacement signal filter dictate the need for aircraft altitude rate information for mode stabilization. An altitude rate signal is developed by integration of aircraft normal (vertical) acceleration, which is summed with the altitude displacement and integral signals to provide the phase lead (and, therefore, path damping) required for stable system operation. The center-of-gravity-mounted normal accelerometer provides the signal proportional to aircraft normal acceleration. This signal is fed to the pitch computer (summing junction 12) via the vertical path damping channel. This channel is a high pass filter that wipes out steady-state input signals such as noise and nulls. It consists of a demodulator (Z100-7), and RC lead network (25-second time constant), and a 400-Hz modulator (Z100-7). In the control frequency spectrum, the output of this channel is proportional to altitude acceleration. This output signal, converted to an altitude rate signal by integration through the pitch computer, commands pitch attitude proportional to altitude rate deviations.

A signal proportional to the aircraft bank angle, derived from the cosine winding of the roll computer resolver, is summed with the normal accelerometer signal at the input to the vertical path damping channel (summing junction 10). This signal is calibrated to provide approximate cancellation of the normal accelerometer output resulting from aircraft turn maneuvers. A turn command (aircraft bank) produces a change in aircraft load factor (normal acceleration) which is sensed by the normal accelerometer, thus causing an output corresponding to a nonexistent change from the reference altitude. Cancellation of this signal eliminates the erroneous altitude change from the reference that this signal would command. The wipe-out action of the vertical path damping channel eliminated the steady-state effects of mismatch between the resolver and accelerometer signals.

In conclusion, the AFCS barometric altitude control commands aircraft pitch attitude. The pitch attitude is proportional to integral plus displacement signals at the low frequency portion of the control spectrum and proportional to only displacement signals in the midfrequencies. It is proportional to displacement plus rate signals in the high frequency portion of the control spectrum.

The AFCS provides longitudinal flightpath control to the Mach number existing at the time of Mach hold mode engagement. The Mach hold function is accomplished by commanding pitch attitude proportional to Mach number displacement and integral, and to vertical path rate deviations. The Mach hold mode is selected via the Mach switch on the controller. The theory of signal operation of the Mach hold mode is the same as for altitude mode and is not repeated.

Control Stick Steering Mode

The AFCS is implemented for control stick steering; that is, pilot-applied stick force reverts the system back to the stability augmentation mode while the aircraft is maneuvered manually. With the attitude hold mode engaged, application of longitudinal stick force (1.1 lb) sufficient to actuate the force-sensitive switches in the pilot's

Table 7-3.—Summary of AFCS operation

Mode of operation	Switching and signal data	Signal input axis
STABILITY AUGMENTATION	Controller: ON-OFF switch—ON AUTO/STAB-AUG switch—STAB-AUG	--------
Damper	Rate gyroscope: Roll, yaw, and pitch rate signals	Rudder, stabilizer, flaperon
Attitude synchronization	Inertial navigation system: Roll angle and elevation angle signals	Rudder, stabilizer, flaperon
Heading synchronization	Inertial navigation system: True heading signal	Flaperon
ATTITUDE HOLD	Controller: ON-OFF switch—ON AUTO/STAB-AUG switch—AUTO	--------
Roll attitude hold	Aircraft: Roll attitude more than 5° but less than 60°	Flaperon
	Inertial navigation system: Roll angle signal	--------
Automatic pitch trim	Stabilizer actuator: Series sensor position signal	Stabilizer
Pitch attitude hold	Aircraft: Pitch attitude between +25° pitchup, and -60° pitchdown	Stabilizer
	Rate gyroscope: Pitch rate signal	--------
	Inertial navigation system: Elevation angle signal	--------
Heading hold	Aircraft: Roll attitude between 0° and 5°	Flaperon
	Inertial navigation system: True heading signal	--------
ALTITUDE HOLD	Controller: ON-OFF switch—ON AUTO/STAB-AUG switch—AUTO ALT button—depressed	Stabilizer
	Normal accelerometer: Normal acceleration signal	--------
	Air data computer: Altitude error signal	--------

Table 7-3.—Summary of AFCS operation—Continued

Mode of operation	Switching and signal data	Signal input axis
MACH HOLD	Controller: ON-OFF switch—ON AUTO/STAB-AUG switch—AUTO MACH button—depressed	Stabilizer
	Normal accelerometer: Normal acceleration signal	--------
	Air data computer: Mach error signal	--------
RETURN TO LEVEL	Controller: ON-OFF switch—ON AUTO/STAB-AUG switch—AUTO RETURN TO LEVEL switch—depressed NOTE: At completion of the return to level maneuver, the flaperon and stabilizer axes revert to the heading hold and pitch attitude hold modes, respectively.	Flaperon and stabilizer
COMMAND	Controller: ON-OFF switch—ON AUTO/STAB-AUG switch—AUTO CMD switch—ON	
Roll command	Ballistic computer set: Discrete (28 volts dc) roll command available signal Roll angle command signal	Flaperon
	Inertial navigation system: Discrete (28 volts dc) 90° flipping signal (inverted flight)	--------
RETURN TO LEVEL	Ballistic computer set: Discrete (28 volts dc) return to level signal	Flaperon and stabilizer
G-command	Ballistic computer set: G-command signal	Stabilizer
GROUND CONTROLLED BOMBING (TPQ-10)	Controller: ON-OFF switch—ON AUTO/STAB-AUG switch—AUTO	Flaperon
	Aircraft: Heading hold configuration	--------
	GCBS control panel: TPQ-10 ENGAGE switch—ON	--------

stick removes the pitch attitude reference from the system (deenergizes relay K1004), and causes the pitch computer to revert to the synchronization phase. Continued force results in a manual input to the stabilizer aircraft control system (summing junction 14), producing stabilizer deflection and an aircraft pitch rate.

While the stick force is applied, the AUTO/STAB-AUG switch on the controller remains engaged and the AFCS stability augmentation mode functions, as described in the stabilizer axis discussions, providing pitch damper control. In the stabilizer axis, the manually commanded pitch attitude is continuously synchronized as described previously. If the altitude or Mach hold mode has been selected prior to the application of longitudinal stick force, the respective engage switch will disengage with stick force application, thus removing the particular control function. Upon release of the stick, the attitude hold mode is automatically reengaged in the pitch attitude hold configuration. If the command mode (via the CMD switch) has been selected prior to the application of longitudinal stick force, it remains engaged and the command mode control function automatically regains control upon release of the stick (except for the ALS data link phase). A summary of AFCS operation is presented in table 7-3.

AFCS INTERLOCK

The interlock provisions of the AFCS establish the system configuration and function consistent with the selected operating mode. Each mode is interlocked to prevent selection of incompatible functions. Visual indication of the current operating mode is presented by controller switch identification.

The AFCS interlock system generally operates off the 28-volt dc supply. The mode select switches on the controller are solenoid-held toggle and pushbutton switches, with the exception of the return-to-level switch which is the momentary-on, pushbutton type. The solenoid-held type of switch is ideally suited to interlock systems in that the solenoid excitation may be applied directly through the respective switch or indirectly through relays and/or other switches. Therefore, the switching voltage and the solenoid voltage may be one and the same, eliminating the possibility of selecting an incompatible mode. Most of the signal and interlock switching is accomplished by operation of standard double-pole, double-throw relays. All the switching relays are in the computer, with the majority of them located in the electrical equipment rack, and the remainder within the various modules of the computer. Detailed theory of operation of the interlock system and circuitry is found in NAVAIR 01-85ADA-2-5.1.

CHAPTER 8

POWER PLANT AND AIRCRAFT ENVIRONMENTAL SYSTEMS

There have been vast improvements in aircraft design, construction, and functional purpose since man's first flight. A man sat in an open seat, had someone else start his engine, and his only means of controlling the aircraft were the engine throttle and a simple surface control lever. We have progressed from this stage of flight to the present ever-changing stages of space flight.

Through necessity, because of increasing complexity of naval aircraft, a pilot must be able to start and control his engine or engines, and monitor their performance. At high level flights and speeds, he must be able to interpret all performance indications and make changes and adjustments to his numerous controls for optimum mission performance, including emergency procedure operations when necessary. To function properly under these circumstances, the pilot must be in a pressurized, temperature-controlled environment.

This chapter includes the description, principles of operation, and application of various power plant and aircraft environmental systems found in modern naval aircraft. Systems covered include engine temperature and variable exhaust nozzle control systems, engine performance indication and warning systems, electrical starting control systems, propeller feathering and synchrophasing systems, and aircraft pressurization and cabin temperature control systems.

VARIABLE EXHAUST NOZZLE CONTROL SYSTEM

The variable exhaust nozzle control system (fig. 8-1) is composed of electrical, hydraulic, and mechanical components which position the variable exhaust nozzle for exhaust gas temperature control and optimum thrust at all power settings of a turbojet engine. Nozzle area is changed according to engine operating conditions in order to obtain the desired thrust while maintaining safe operating conditions throughout the engine.

The nozzle area is scheduled by the nozzle area control. The control uses three signals (power lever position, nozzle position, and exhaust gas temperature (EGT)) to regulate the output of the nozzle pump. The power lever position, transmitted to the nozzle area control by the power lever linkage flexible cable, schedules the nozzle almost full open, up to and at idle rpm. When the power lever is advanced from idle, the nozzle closes to a smaller area (often referred to as the cruise area) following a mechanical schedule.

As the power lever is further advanced, an electrical signal from the temperature amplifier causes the torque motor in the control to override the mechanical schedule. From this point until military temperature is attained, the nozzle modulates according to a schedule determined by exhaust gas temperature and engine speed. This schedule permits rapid acceleration of the engine on a power lever burst. When military operation is reached, the temperature amplifier changes the signal to the torque motor and regulates nozzle area to maintain the desired steady state EGT.

The temperature amplifier receives a millivoltage from the engine thermocouples in order to derive the controlling signal that is transmitted to the torque motor in the nozzle area control. The thermocouples measure the EGT after the exhaust gas exits from the

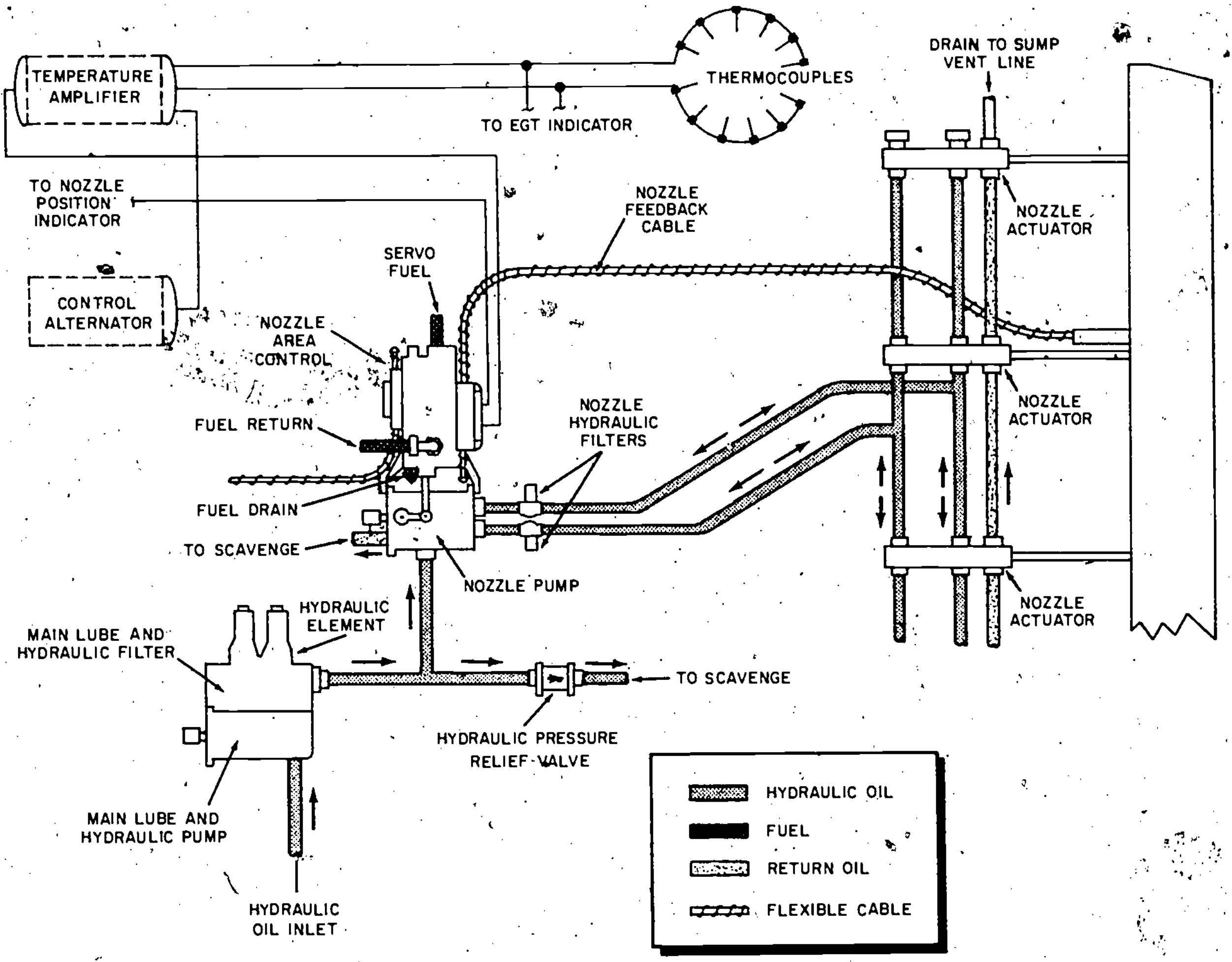

208.210

Figure 8-1.—Variable exhaust nozzle control system.

thirdstage turbine wheel. A signal that varies with temperature is sent to the temperature amplifier, and another signal is sent to the exhaust gas temperature indicator in the cockpit. On an afterburner light, the rate of change of engine speed is sensed in the temperature amplifier through the frequency of the power that operates the amplifier. This power is generated by the control alternator. A circuit in the amplifier modifies the signal to the torque motor according to the rate of change of engine speed. This modified signal schedules the nozzle open to reduce the speed rollback. A potentiometer, mounted on the nozzle feedback shaft in the nozzle area control, transmits a signal voltage of nozzle area to the nozzle position indicator in the cockpit.

The variable exhaust nozzle is a converging-diverging type nozzle which changes the exhaust escape area to control exhaust gas temperature and provide optimum thrust at all power settings. The assembly is composed of an internal primary nozzle of 24 flaps and an external secondary nozzle of 24 flaps. The flaps of the primary nozzle are hinged to the rear flange of the tailpipe. The secondary nozzle is secured by a stationary support shroud which is mounted onto the tailpipe by four brackets. The shroud is slotted to provide for thermal expansion and affords pivot points for the flap actuating mechanism. The primary and secondary flaps are linked together and controlled by four synchronized hydraulic actuators. When the flaps are in any position other than fully open, the primary flaps deflect the exhaust gases to a converging or narrowing stream. At the same time, secondary airflow along the outside of the engine is directed into the area between the primary and secondary nozzles. This forms a cool air cushion on the inside of the secondary flaps and maintains convergence of the exhaust stream. When the nozzle is fully open, the primary flaps do not deflect the exhaust gases and the exhaust stream is unrestricted. For a given power setting, the exhaust gas temperature is increased by decreasing the nozzle area.

CONTROL ALTERNATOR

The control alternator generates the electrical power that is supplied to the temperature amplifier. The control alternator is a single-phase ac generator with an 8-pole, permanent magnet rotor. The drive shaft is provided as part of the gearbox; therefore, the control alternator has no bearings and requires no lubrication. The stator winding is potted to protect the winding if oil leaks across the drive shaft seal. The control alternator is engine driven from the rear face of the transfer gearbox. Output voltage and frequency are proportional to engine speed.

THERMOCOUPLE HARNESS

Thermocouples convert heat energy from the engine exhaust gases into electrical signals which are used to indicate and control the engine operating temperature. The thermocouple harness consists of two half-sections. Each section contains six probe assemblies connected by formed, rigid piping. A probe assembly is comprised of a junction box, a harness mounting nut and flange, two loop-junction thermocouples, insulation and a housing to support the thermocouple wiring, and a cylindrical shield to protect the thermocouples.

The assembled half-sections make up two independent thermocouple circuits, with each circuit consisting of 12 thermocouples connected in parallel. The harness is mounted on the turbine frame so that the probes extend into the exhaust gas flow slightly downstream from the No. 3 turbine wheel. In the thermocouple harness the thermocouples are combined into two circuits. The output of one circuit is routed to the temperature amplifier for use in controlling exhaust gas temperature. In this circuit the reference junction (needed for proper thermocouple circuit operation) is located at the temperature amplifier connector. The second circuit supplies a signal to the exhaust gas temperature indicator in the cockpit.

For a review of thermocouple circuit operations, refer to *AE 3 & 2,* NAVEDTRA 10348 (Series).

TEMPERATURE AMPLIFIER

The temperature amplifier transmits an electrical signal to the torque motor in the nozzle area control. This signal varies according to changes of engine speed and exhaust gas temperature in order to actuate the mechanism of the nozzle area control which, in turn, schedules the area of the variable nozzle. During engine operation, fuel flows through a manifold on the underside of the amplifier to cool the internal components.

During operation of the temperature amplifier several separate units or modules inside the amplifier, and two components outside the amplifier, function to produce the final output signal that is transmitted to the torque motor.

The temperature amplifier is shown schematically in figure 8-2. The amplifier contains a power supply transformer, a rectifying and voltage regulating circuit, and magnetic amplifiers to control the exhaust gas temperature. The thermocouple signal, which is a millivolt signal, is proportional to the exhaust gas temperature. This millivolt signal is fed into the amplifier at J1.

The control alternator supplies a voltage which is applied to the primary of the power transformer. The output of one secondary

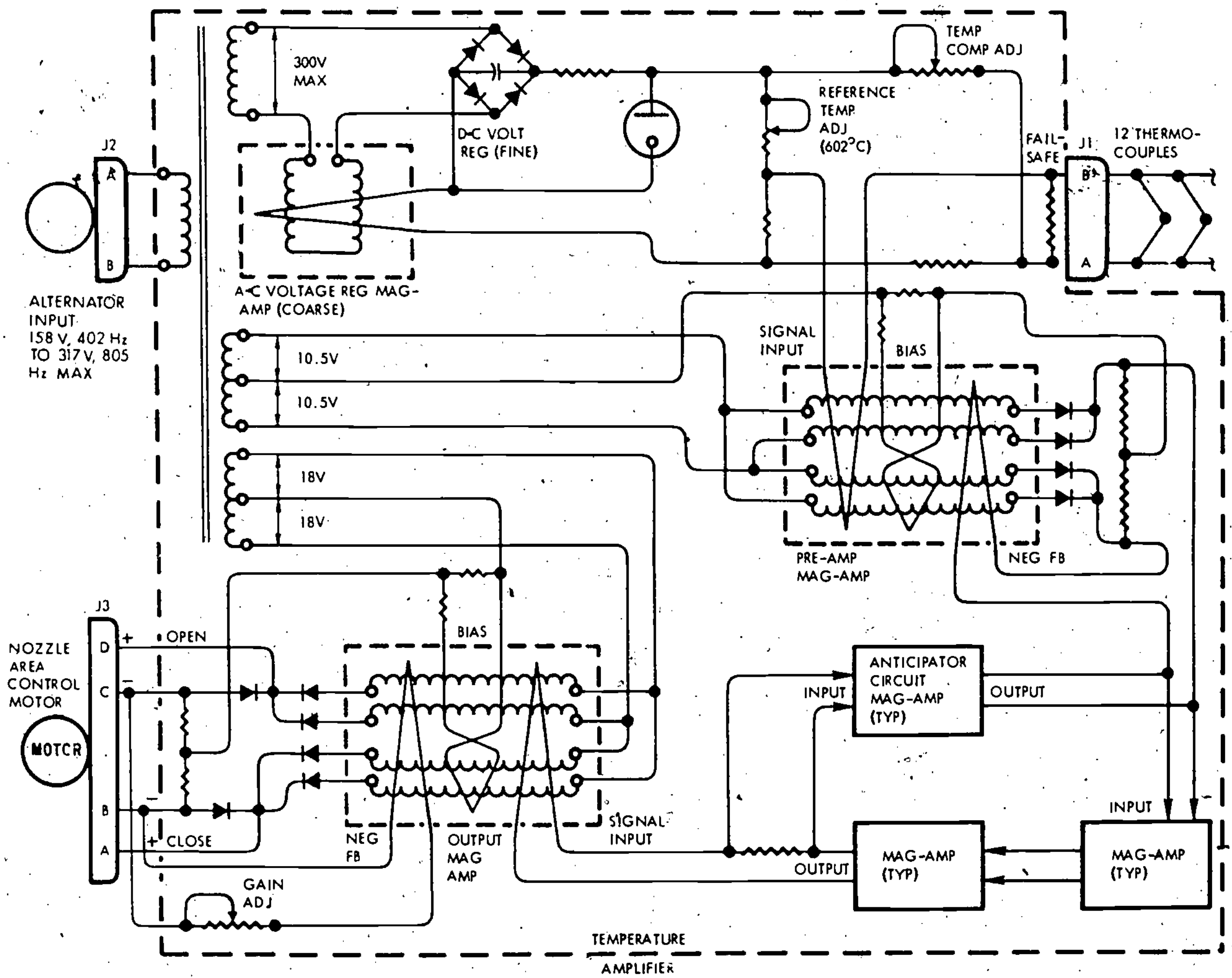

208.211

Figure 8-2.—Schematic diagram of a temperature amplifier.

winding is rectified and used as a reference voltage. This voltage is regulated before and after rectification by a saturable reactor and a voltage regulating tube. The reference voltage is compared to the thermocouple signal; the difference is then amplified and a signal is sent out through J3 to the nozzle area control motor.

If the thermocouple voltage is less than the temperature reference voltage, a signal is sent to the nozzle area control causing the nozzle area to be decreased. If the thermocouple voltage is greater than the temperature reference voltage, the signal sent to the nozzle area control is of opposite polarity, and the nozzle area is increased.

A temperature compensating resistor in the thermocouple input circuit compensates for changes in ambient temperature. A resistor across the thermocouple input connection is a fail-safe feature in the event of an open circuit in the thermocouple harness. Should this occur, the resistor provides a complete path for the reference voltage, causing a [illegible]ch closes the nozzle to preven[illegible]ne thrust.

The variable exhaust nozzle control system just discussed pertains to turbojet engines. In comparison, the variable exhaust nozzle control system used on our newest turbofan engines (TF 30 used in the F-14A aircraft) is used for maximum thrust efficiency while in flight during afterburner operation; and when the engine is at ground idle on the deck, the nozzle is scheduled wide open to reduce engine residual thrust. Opening of the nozzle during afterburner operations is basically controlled by throttle position and the turbine pressure ratio of the engine. Engine temperature is controlled by the fuel control. Since this is a hydromechanically controlled unit, the only electrical component is the nozzle position transmitter, which is used for a cockpit indicator, located on the exhaust nozzle control.

AUTOMATIC TEMPERATURE CONTROL SYSTEMS

As previously mentioned, a control device is a device which governs in some predetermined manner the electric power delivered to an apparatus to which it is connected. An automatic temperature control system is an example of such a device. Automatic temperature control systems are used on modern aircraft to control engine temperatures and cabin and vent suit temperatures.

Engine temperatures are usually controlled through the use of fuel trimming circuits, while cabin and vent suit temperatures are regulated through the use of sensors and transistorized bridge ciruits. Cabin and vent suit temperatures are covered later in this chapter. A typical engine temperature control system is discussed in the following paragraphs.

ENGINE CONTROL SYSTEM

The engine control system used on a turboprop engine permits the operator to control engine speed (in the taxi range only), turbine inlet temperature, and torque through the use of power and condition levers. These levers are connected to each engine coordinator by pushrods, sectors, cables, and pulleys. When the engine is operating in the flight range, engine speed is constant. Engine power is controlled by increasing or decreasing fuel flow, which results in a corresponding change in turbine inlet temperature. The system installed in the E-2 aircraft is electromechanical and provides electronic fuel trimming.

The main components of the engine control system are as follows:

1. Power levers.
2. Condition levers.
3. Engine coordinators.
4. Temperature datum controls.
5. Turbine inlet thermocouples.
6. Temperature datum switches.

The block diagram of an engine control system is shown in figure 8-3.

Power Levers

The power levers (one of each engine) can be moved separately or both at the same time to control engine power, within a range of settings from REVERSE (reverse thrust) to MAX POWER (takeoff). Switches within the cockpit pedestal are actuated by the power levers to supply electrical power to other systems. A detent at the FLT IDLE position prevents inadvertent movement of the power levers below FLT IDLE (while airborne). To move the power levers to the taxi range, the levers must be raised from the detent. During a catapult-assisted takeoff, a retractable catapult grip aids the pilot in maintaining the power levers at MAX POWER.

Condition Levers

The condition levers (fig. 8-3) are next to the power levers on the cockpit pedestal and have FEATH, GRD STOP, RUN, and AIRSTART positions. Switches actuated at each condition lever position complete electrical circuits for other systems. Each condition lever has a detent release handle which must be lifted to move the levers to different positions. A detent holds the lever at FEATH, GRD STOP, or RUN. When the condition lever AIRSTART

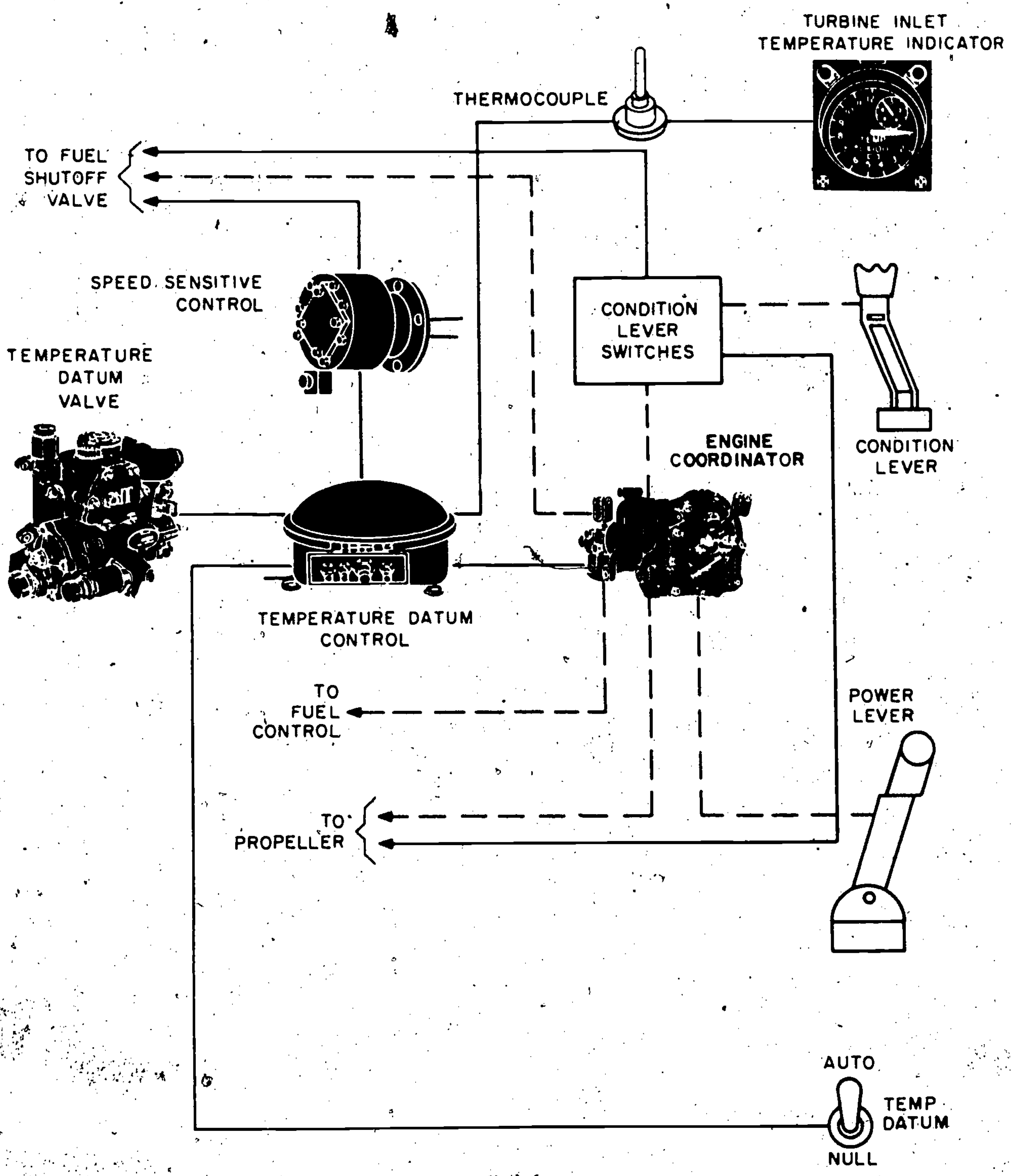

228

208.212

Figure 8-3.—Engine control system block diagram.

position is selected, the propeller unfeathers and the engine starting cycle begins. The lever must be held in the AIR START position until the engine speed reaches 100 percent rpm; when released, the lever springs back to RUN and remains there for all normal operation. When set to RUN, the condition lever positions the mechanical linkage to open the fuel shutoff valve. A mechanical stop in the pedestal prevents both condition levers from being set to FEATH at the same time. When set to FEATH, the condition lever electrically and mechanically closes the corresponding fuel shutoff valve and feathers the propeller. At GRD STOP, the condition lever electrically closes the fuel shutoff valve to shutdown the engine.

Engine Coordinators

The coordinators (fig. 8-3) are mechanical devices that coordinate the power and condition levers, the propeller, the fuel control, and the electronic fuel trimming circuit. One engine coordinator is mounted on each fuel control. The main components of a coordinator are a variable potentiometer, a discriminating device, and a cam-operated switch. A scale calibrated from 0° to 90° is attached to the outside case; a pointer is secured to the main coordinator shaft. Pushrods connected from the coordinator to a cable sector transmit power and condition lever movement to the coordinator. Power lever movement transmitted to the coordinator changes the resistance of the variable potentiometer and changes the desired temperature reference signal to the temperature datum control. The cam-operated switch switches the temperature datum control from temperature limiting to temperature controlling when the power lever is moved above 66° coordinator indication and if engine speed is above 94 percent rpm. Movement of the power lever is transmitted to the coordinator and then to the propeller and fuel control through a series of rods and levers. When the condition lever is moved to FEATH, the discriminating device mechanically positions the propeller linkage toward feather and closes the fuel shutoff valve in the fuel control, regardless of power lever setting.

Temperature Datum Controls

The temperature datum controls (fig. 8-3) are electronic units that automatically compensate for changes in fuel density, manufacturing tolerances in fuel controls, and variations in engine fuel requirements between engines. With the power lever above 66° coordinator (temperature controlling range) and the TEMP DATUM switch in AUTO, the temperature datum control compares the actual turbine inlet temperature signal and the desired temperature reference signal. If the difference is greater than 1.9°C (4.5°F), the control electrically signals the temperature datum valve to reduce or increase fuel flow to the engine, as required, to bring the turbine inlet temperature to the desired value. A damping voltage is fed back to the control from a generator within the temperatue valve motor to prevent overcorrection and stabilize the system. When the engine speed is above 94 percent rpm and the power lever is below 66° coordinator (temperature limiting range), the normal limiting temperature is automatically set at 978°C (1,792°F). However, when the engine speed is below 94 percent rpm, regardless of power lever position, the limiting temperature is set at 830°C (1,524°F) to prevent excessive turbine inlet temperature during starting and acceleration when the compressor bleed valves are open.

Turbine Inlet Thermocouples

Dual-unit thermocouples (fig. 8-3) are radially mounted in the turbine inlet case of each engine. The junction portion of the thermocouples protrudes through the case to sense the gas temperature before the gas enters the turbine section. Four leads, two of Chromel and two of Alumel, connect to each thermocouple to form two independent parallel circuits. One circuit is connected to the cockpit turbine inlet temperature indicator; the other circuit supplies the temperature datum control with temperature signals for the electronic fuel trimming circuit. As the gases heat the thermocouples, an electromotive force generated in the thermocouples is transmitted through the connecting wiring harness to the cockpit indicator and the temperature datum control. Because the thermocouples are wired in parallel, the average temperature of the thermocouples is transmitted. If one parallel circuit fails, the other circuit is not affected.

Temperature Datum Switches

The left and right engine temperature datum (TEMP DATUM) switches are on the engine control panel in the cockpit. Each switch has AUTO and NULL positons. (See fig. 8-3.) When the switch is set to AUTO and the engine rpm is above 94%, and the engine coordinator is above 66°, the temperature datum control compares the turbine inlet temperature (represented by the output of the turbine inlet thermocouples) to a reference temperature (represented by the output of the potentiometer in the coordinator). If the temperatures differ, the temperature datum control electrically signals the temperature datum valve to bypass more or less fuel from the engine to keep turbine inlet temperature at the selected value.

If the electronic fuel trimming circuit malfunctions, the TEMP DATUM switch must be set to NULL. The circuit is thereby deenergized and turbine inlet temperature is controlled by the fuel control through movement of the power lever. Overtemperature protection is locked out and the turbine inlet temperature indicator must be continually monitored to prevent excessive turbine inlet temperatures.

ENGINE PERFORMANCE INDICATING AND WARNING SYSTEMS

In the S-3 aircraft numerous engine performance indications are grouped in such a way that the observer can easily monitor and compare the operations of both engines at a glance. Some of the vertical scale indicators illustrated in figure 8-4 not only show comparative scales between number 1 and number 2 engines, but have monitor circuits that activate warning lights when out-of-tolerance conditions arise. Refer to *AE 3 & 2*, NAVEDTRA 10348 (Series), for internal vertical scale indicator operations.

FUEL FLOW INDICATION

The fuel flow indicator (fig. 8-4, (1)) contains two independent channels that indicate the rate of fuel flow of each engine in pounds per hour (pph X 1000). A fuel flow transmitter, located on each engine, senses the fuel consumption rate.

Each fuel flow transmitter contains two pulse generation pickups. The two pickup exciters are mechanically coupled by a spring. One pulse generator provides the reference pulse and the second pulse generator provides a lagging pulse when fuel is flowing through the transmitter unit.

The amount of time lag between the two pulses (a pulse train) is proportional to the amount of fuel flow. Each channel of the indicator contains the necessary circuits to monitor this pulse train signal from the fuel flow transmitter. This signal is applied to an electromechanical servoamplifier circuit that moves the indicator display tape to the proper position.

RPM INDICATIONS

Two engine speed indicators are used in the S-3 (fig. 8-4, (2) and (6)). Gas generator speed indicator N_G indicates the speed of the engine gas generator. The gas generator is made up of the compressor, combustor, and the two-stage pressure turbine of the engine.

A tachometer generator, mounted on the engine, has an ac output with a frequency that is proportional to gas generator rpm. The indicator has a separate channel for each engine that converts this signal into indicator output readings expressed in percent of total rpm (% X 10). When an engine's gas generator speed exceeds 100%, a yellow warning light for that engine (3) illuminates at the top of the indicator.

Fan-speed indicator N_F indicates the speed of the engine's fan. A fan-speed transmitter is mounted on the front frame assembly of the engine. The transmitter consists of a permanent magnet surrounded by a coil of wire. This pickup unit is positioned near ferrous nuts on the fan shaft. The proximity of these nuts, rotating past the magnetic field of the pickup

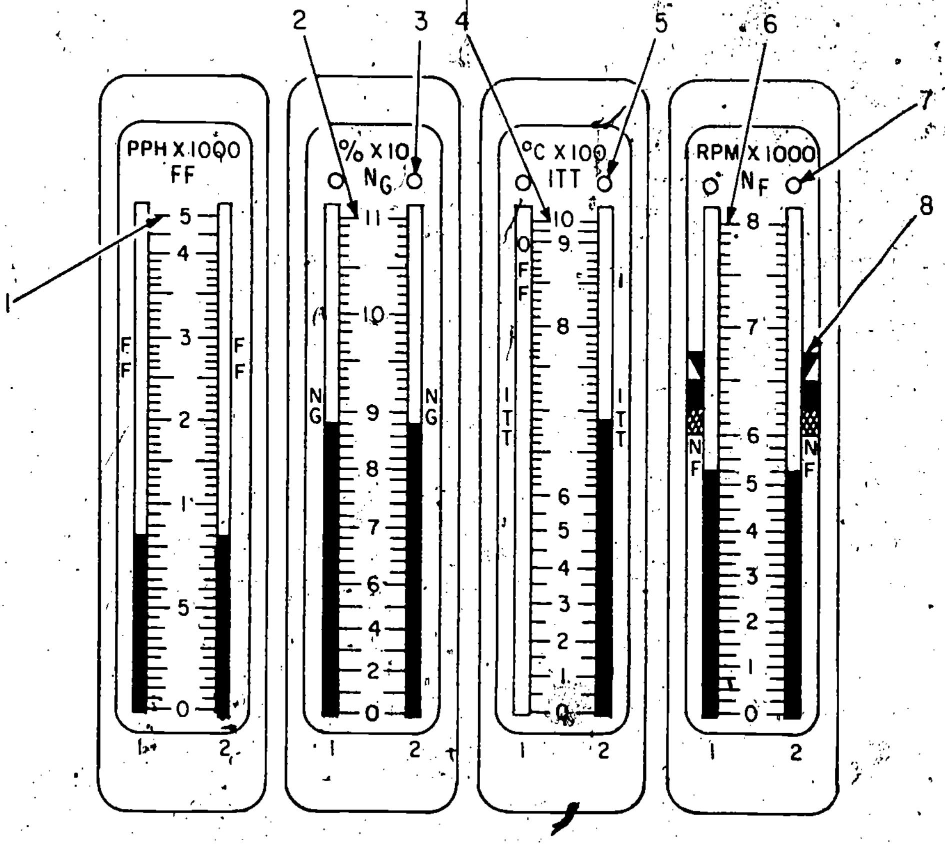

1. (FF) Fuel flow indicator.
2. (NG) Gas generator speed indicator.
3. (NG) Overspeed caution light (yellow).
4. (ITT) Interturbine temperature indicator.
5. (ITT) Overtemperature warning light (red).
6. (NF) Fan speed indicator.
7. (NF) Overspeed caution light (yellow).
8. Takeoff rpm indicator marks.

208.284

Figure 8-4.—Engine performance indicators.

transmitter, generates 28 pulses for each revolution of the shaft.

The pulse train output from the fan-speed transmitter is applied to the proper channel of the indicator for that engine. This signal is processed and converted to a proper indication output display (RPM X 1000). Also contained in the indicator is a reference generator and tuned logic circuit that illuminates a yellow warning light (7) in the event of a fan overspeed.

The takeoff rpm indicator marks (8) are movable markers that are mechanically adjusted before takeoff. They are used by the flight crew to emphasize the rpm limit. This is necessary because of different fan-speed maximums for different takeoff power settings.

INTERTURBINE TEMPERATURE INDICATION

Interturbine temperature indicator ITT indicates to the pilot and copilot the interturbine temperature of both the left and right engines. An assembly of five thermocouples on the left side of the engine is used for engine temperature sensing. The thermocouples are connected in parallel; thus, the voltage transmitted to the interturbine temperature indicator is the average output of the thermocouple assembly.

Each channel of the indicator contains the necessary electronic and mechanical devices, including a cold junction compensation circuit, for proper indicator display in degrees Celsius (°C X 100). A monitoring circuit also illuminates a red overtemperature warning light (5) if the interturbine temperature exceeds specified limits.

FIRE WARNING SYSTEM

Fire detection systems have become an essential warning device in almost every naval aircraft. The system warns the pilot by illuminating a "fire warning light" whenever there is a fire or an overheat condition in engine nacelles or cavities. Figure 8-5 shows a typical jet engine fire detection sensing circuit.

A schematic diagram of a fire detection system is shown in figure 8-6. A typical fire warning sensing element consists of an Inconel (nickel, chromium, iron alloy) tube enclosing two Inconel wires that are separately embedded in a specially formulated ceramic electrolytic substance. This ceramic substance has physical and electrical properties such that it has a high resistance at temperatures below an overheat condition temperature, has a marked decrease in resistance at temperatures approaching an overheat condition, and can withstand heat transients of 3,000°F and above.

When the temperature reaches an overheat condition, the resistance of the ceramic core decreases so that a small current flows between the wires. The control units, which are rate-sensitive and transistor operated, monitor the resistance of the sensing elements and are triggered by a drop in resistance of the sensing element.

The control unit circuit consists of a relay controlled by a bistable multivibrator and a regulated power supply. Transistors Q101 and Q102 make up the vibrator circuit which causes

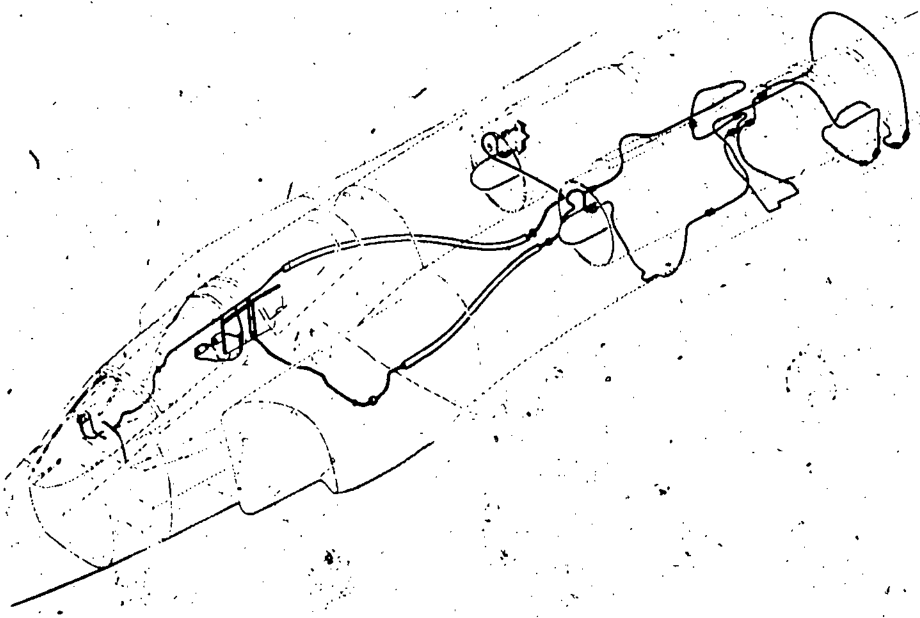

208.206

Figure 8-5.—Jet engine fire detection sensing circuit.

relay K101 to energize when the circuit is triggered. Transistor Q103, resistor R107, and diode CR108 are used to maintain voltage regulation because the circuit is sensitive to any voltage variations at the sensing elements. Capacitor C101 is the circuit element which provides rate sensitivity.

When the fire detection test switch is actuated, 115-volt ac power is routed to the fire detector test relay. Energizing the fire detector test relay shorts the inner conductors together, simulating a resistance reduction in the sensing elements. All the control units then function as if an actual fire or overheat condition existed.

ENGINE START CONTROL SYSTEM

In discussing an engine start control system, what is commonly referred to as engine starting, ignition, and fuel control systems will be combined. This will give a better picture of how these systems interrelate than if discussed separately. The T-56 engine used in the P3C aircraft is used as the training vehicle in this discussion. Refer to figure 8-7 and table 8-1 throughout this discussion.

DESCRIPTION OF MAJOR COMPONENTS

Air Turbine Starter

The air turbine starter (not shown in fig. 8-7) is pneumatically driven and mechanically connected to the engine through a gear box. The air turbine starter is operated by compressed air from an external gas turbine compressor (GTC), the internal auxillary power unit (APU), or bleed air from an operating engine. The

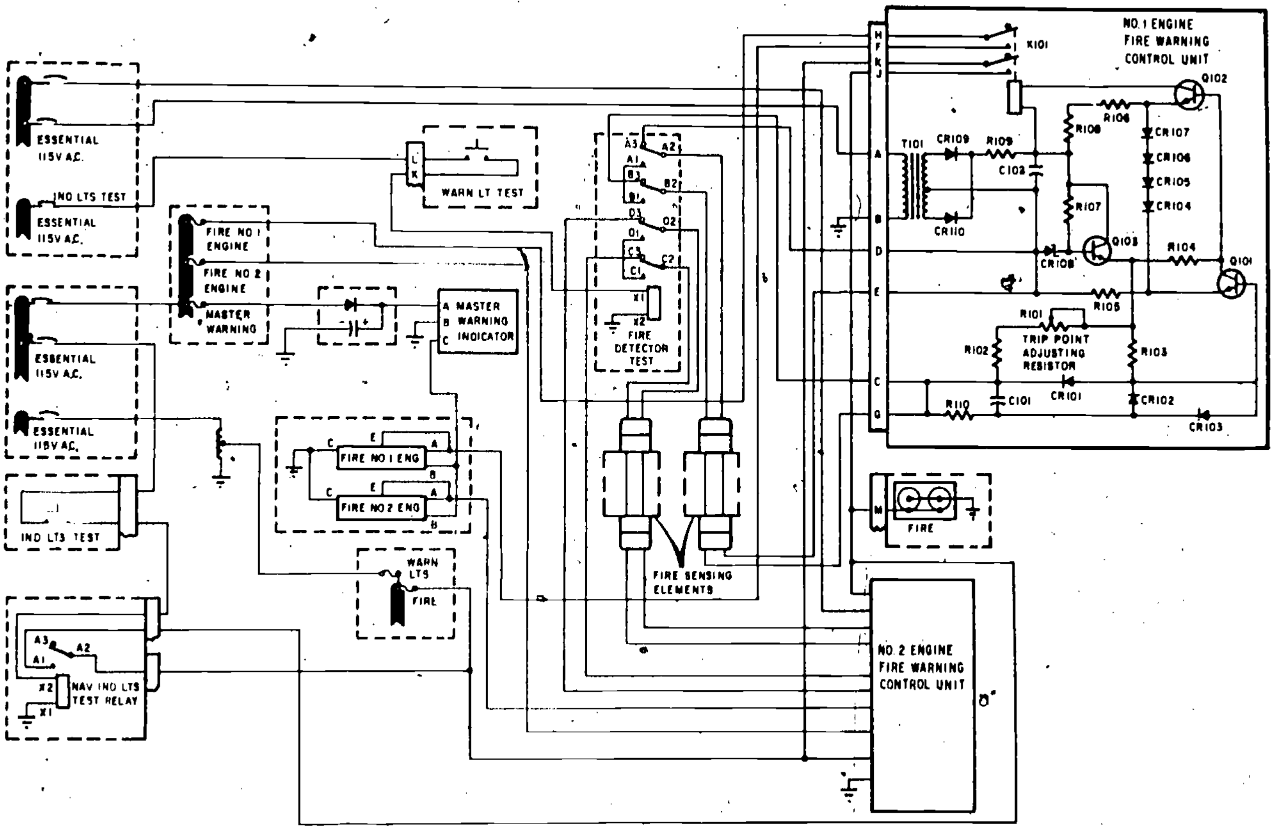

208.207

Figure 8-6.—Fire detection schematic diagram.

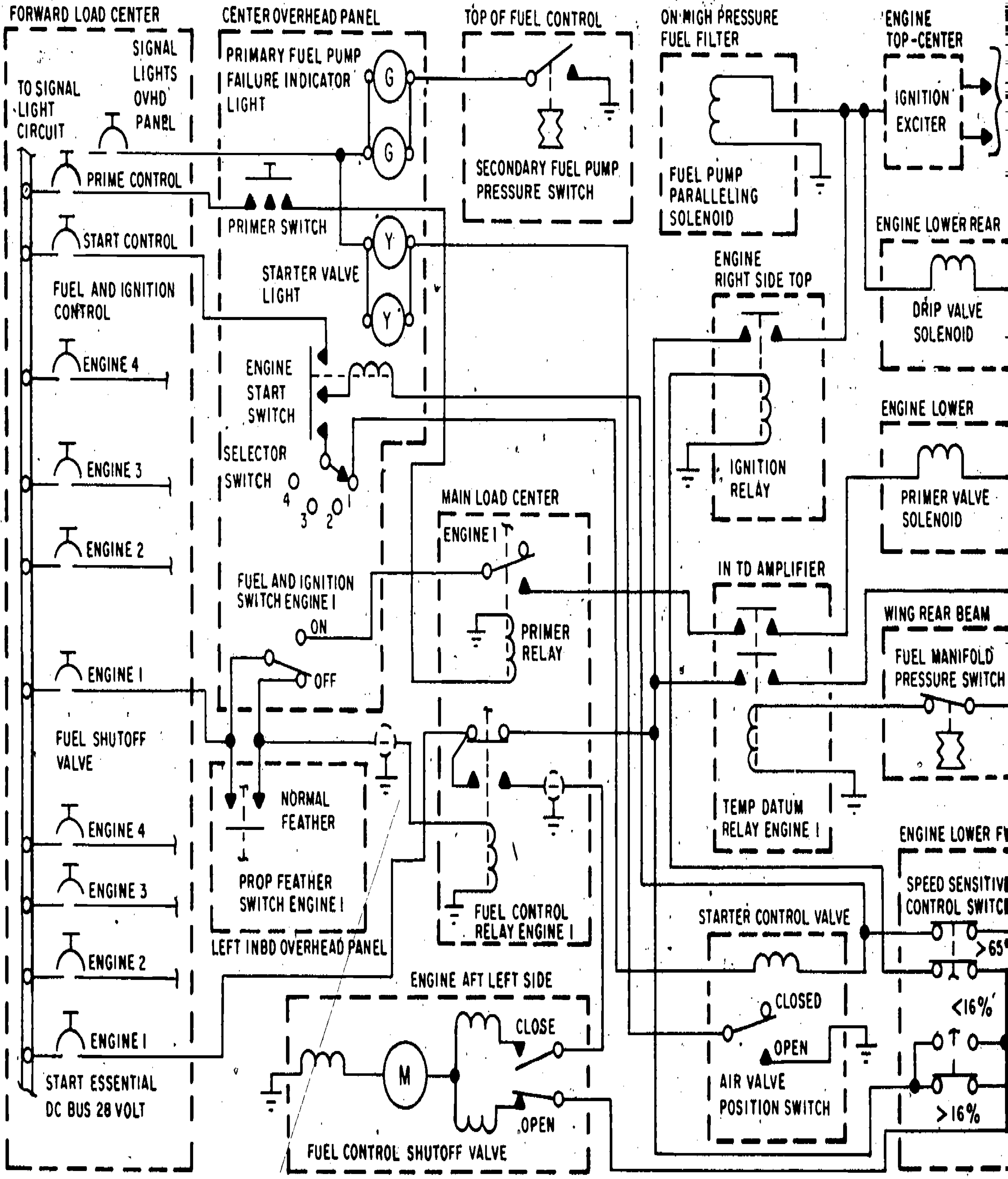

Figure 8-7.—Engine start control system.

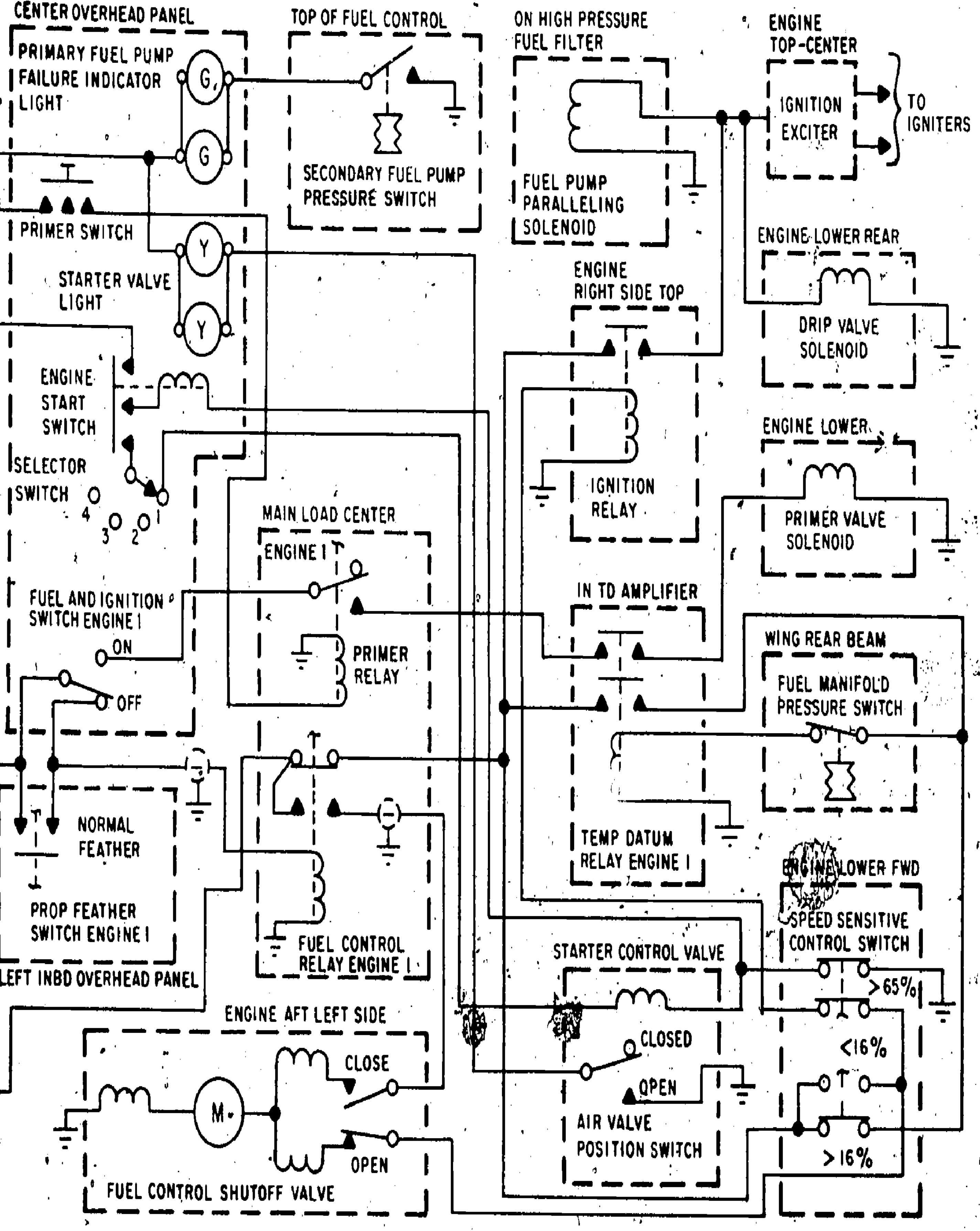

208.285

Figure 8-7.—Engine start control system.

Table 8-1.—Engine starting sequence

		16%		65%	94%
ENGINE RPM	*0% 10%*	*20%*	*30% 40% 50% 60%*	*70% 80% 90%*	
STARTER	CRANKING ENGINE			NOT CRANKING ENGINE	
STARTER CONTROL VALVE	ENERGIZED			DE-ENERGIZED	
FUEL CONTROL SHUTOFF VALVE	DE-ENERGIZED	ENER-GIZED	DE-ENERGIZED		
FUEL FLOW TO FUEL NOZZLES	NO	YES			
IGNITION RELAY	DE-ENERGIZED	ENERGIZED		DE-ENERGIZE	
IGNITION EXCITER	DE-ENERGIZED	ENERGIZED		DE-ENERGIZE	
MANIFOLD DRAIN VALVE SOLENOID	DE-ENERGIZED	ENERGIZED		DE-ENERGIZE	
MANIFOLD DRAIN VALVE	OPEN	CLOSED BY SOLENOID AND HELD CLOSED BY FUEL PRESSURE			
PARALLELING VALVE SOLENOID	DE-ENERGIZED	ENERGIZED		DE-ENERGIZE	
PARALLELING VALVE	OPEN	CLOSED		OPEN	
FUEL PUMP OPERATION	SERIES	PARALLEL		SERIES	
PARALLELING LIGHT	OFF	ON, WHEN SECONDARY PRESSURE EXCEEDS 150 PSIG		OFF	
ENRICHMENT VALVE SOLENOID	DE-ENERGIZED	ENER-GIZED	DE-ENERGIZED		
ENRICHMENT VALVE	CLOSED	OPEN	OPENED BY SOLENOID AND CLOSED WHEN FUEL PRESSURE EXC 50 psig		
T.D. VALVE TAKE SOLENOID		ENERGIZED			DE GI
% TAKE POSSIBLE		50%			2
TEMP. LIMIT		START LIMIT 830°C			10
5TH & 10TH STAGE BLEED AIR VALVES		OPEN			CL

Table 8-1.—Engine starting sequence

	16%		65%		94%
	~~0%~~ 10%	20%	30% 40% 50% 60%	70% 80% 90%	100%
	CRANKING ENGINE			NOT CRANKING ENGINE	
LVE	ENERGIZED			DE-ENERGIZED	
FF	DE-ENERGIZED	ENER-GIZED	DE-ENERGIZED		
L	NO	YES			
	DE-ENERGIZED	ENERGIZED		DE-ENERGIZED	
	DE-ENERGIZED	ENERGIZED		DE-ENERGIZED	
	DE-ENERGIZED	ENERGIZED		DE-ENERGIZED	
VE	OPEN	CLOSED BY SOLENOID AND HELD CLOSED BY FUEL PRESSURE			
E	DE-ENERGIZED	ENERGIZED		DE-ENERGIZED	
E	OPEN	CLOSED		OPEN	
N	SERIES	PARALLEL		SERIES	
	OFF	ON, WHEN SECONDARY PRESSURE EXCEEDS 150 PSIG		OFF	
	DE-ENERGIZED	ENER-GIZED	DE-ENERGIZED		
	CLOSED	OPEN	OPENED BY SOLENOID AND CLOSED WHEN FUEL PRESSURE EXCEEDS 50 psig		
		ENERGIZED			DE-ENER-GIZED
		50%			20%
		START LIMIT 830°C			1083°C
		OPEN			CLOSED

compressed air is routed through a manifold, through an engine isolation bleed air valve, and through a starter control valve into the starter's turbine.

The engine start switch, located in the cockpit, controls the opening of the starter control valve which allows compressed air to enter the air turbine starter. A holding solenoid connected through the speed sensitive control holds the engine start switch on until the engine speed reaches 65% rpm.

Speed Sensitive Control

The speed sensitive control, located on the engine, contains internal switches which activate at three predetermined intervals relative to the engine's normal speed—16%, 65%, and 94% of engine rpm. Activation of these switches controls numerous operations in the engine start cycle.

Ignition Exciter

The ignition exciter is a dual electronic ignition unit which utilizes 28-volts dc through the ignition relay and steps up the voltage to a proper level for firing the igniter plugs. (If necessary, refer to *AE 3 & 2*, NAVEDTRA 10348 (Series) for igniter plug operation.) The exciter unit contains two identical circuits, each one independently capable of firing its own igniter plug. The ignition relay is energized through the speed sensitive control so that the exciter is in operation between 16% and 65% rpm.

Engine Fuel Pump and Filter

The fuel pump and high-pressure filter assembly is attached to the rear of the accessories case and consists of a centrifugal boost pump, two gear-type pressure elements, and a high-pressure filter.

Fuel entering the pump assembly passes through the centrifugal boost pump which raises the pressure to a minimum value. Fuel passes through the low-pressure filters before going to the secondary element. There is a differential pressure switch connected across the inlet and outlet of the filters. If the pressure differential exceeds 7.5 psi, the switch closes and completes a circuit to a filter light at the flight deck. Fuel then flows to the primary element and through the high-pressure filter assembly before entering the fuel control. Both the low- and high-pressure filters have bypass valves which open if the filters become clogged.

The capacity of the pump primary elements is 10 percent greater than that of the secondary element. If the primary element should fail, the secondary element will provide sufficient flow to operate the engine.

During engine starting, the elements operate in parallel to provide sufficient fuel flow at low rpm; at other times they operate in series. Parallel operation occurs during starting when engine speed is between approximately 16% and 65% rpm. If both elements are operating properly, the paralleling light will be on between 16% and 65% rpm only. If the secondary element has failed, the light will never come on; if the primary element has failed, the light will be on above 65% rpm.

Fuel Control

The fuel control is mounted on the accessories drive housing and is mechanically linked to the coordinator. The fuel control provides a starting fuel flow schedule which, in conjunction with the temperature datum valve, prevents overtemperature and compressor surge.

The fuel control is scheduled 20 percent richer than the nominal engine requirements to accommodate the temperature datum valve which bypasses 20 percent of the control output when in the null position. This excess flow to the temperature datum valve gives it the capacity to add as well as subtract fuel to maintain the temperature scheduled by the coordinator and the temperature datum control.

The fuel control includes a cutoff valve for stopping fuel flow to the engine. It can be actuated either manually or electrically. When starting the engine, the cutoff valve remains closed until the engine reaches 16% rpm. The speed sensitive control then opens the cutoff valve, permitting fuel to flow to the engine.

Fuel Nozzles

The fuel output from the temperature datum valve flows through the fuel manifold to the six fuel nozzles. Fuel flows through both the primary and secondary nozzle orifices during normal operation, and through only the primary orifice at low fuel flow rates.

Fuel Control Relay

The fuel control relay is a FAILSAFE-type relay that is energized when the FUEL and IGNITION SWITCH is in the OFF position, or when the propeller is feathered. With this arrangement, the engine can still operate if electrical power is lost during flight. If the pilot wishes to shut the engine down, he can do so by placing the FUEL and IGNITION SWITCH in the OFF position, or by feathering the propeller. Power is then directed to the FUEL CONTROL SHUTOFF VALVE which closes and stops all fuel to the engine.

Starting Fuel Enrichment

The primer switch (with two positions, ON and springloaded OFF) operates the fuel enrichment (primer) valve to provide increased fuel flow during engine starting. In addition to the normal fuel flow through the fuel control, a bypass line allows pump discharge fuel to enter the system downstream of the metering portion of the fuel control, but upstream of the fuel control cutoff valve. This fuel is directed to the temperature datum valve, and then to the fuel manifold and nozzles. The primer switch must be placed in the ON position and held there prior to the engine reaching 16% rpm. Further, it must be kept ON until the fuel control cutoff valve opens at 16% rpm or enrichment will not occur. The enrichment (primer) valve closes when fuel pressure in the fuel manifold reaches 50 psi. Fuel enrichment is needed only in very cold climates.

Temperature Datum Valve

The temperature datum valve is located between the fuel control and the fuel nozzles. It is a motor-operated bypass valve which responds to signals received from the temperature datum control. In power lever positions between 0° and 66° the valve remains in a null position and the engine operates on the fuel flow scheduled by the fuel control. The valve remains in the null position unless it is signaled by the temperature datum control to limit turbine inlet temperature. The valve then reduces the fuel flow (up to 50 percent during starting, 20 percent above 94% rpm) by returning the excess to the fuel pump. When turbine inlet temperature is lowered to the desired level, the temperature datum control signals the valve to return to the null position.

In power lever positions between 66° and 90° the temperature datum valve acts to control turbine inlet temperature to a preselected schedule corresponding to power lever position. This is the temperature controlling range. In this range the valve may be signaled by the temperature datum control to allow more (higher temperature desired) or allow less (lower temperature desired) fuel to flow.

Drain Valves

A spring-loaded, solenoid-operated manifold drain valve is located at the bottom of the fuel manifold. It drains the fuel manifold when fuel pressure drops below 8 to 10 psi, minimizing the amount of fuel dropping into the combustion liners while the engine unit is being stopped.

Compressor Bleed Air Valves

To reduce the compressor load on the starter, air is bled from the fifth and tenth stages of the compressor through eight ports on the compressor housing. During starting, the bleed valves are held open up to 94% rpm by compressor air pressure. At 94% rpm the speed sensitive valve ports compressor discharge air to close the bleed valves.

ENGINE START CYCLE OPERATION

The following sequence of events are typical of a normal engine start cycle. External compressed air and electrical power are being applied to the aircraft, and all other system switches are in the proper position for an engine start.

The operator places the ENGINE START SELECTOR SWITCH to the ENGINE NUMBER 1 position. FUEL and IGNITION SWITCH, ENGINE 1 is placed in the ON position, deenergizing the FUEL CONTROL RELAY. This allows power to pass through the contacts of the FUEL CONTROL RELAY, the 16% SPEED SENSITIVE CONTROL SWITCH, and the FUEL MANIFOLD PRESSURE SWITCH to energize the TEMPERATURE DATUM RELAY.

When the ENGINE START SWITCH is depressed, current flows through the ENGINE START SWITCH, the ENGINE START SELECTOR SWITCH, the STARTER CONTROL VALVE, and the 65% switch in the SPEED SENSITIVE CONTROL to ground. Current also flows through the ENGINE START SWITCH holding coil to ground through the same 65% switch in the SPEED SENSITIVE CONTROL.

With power applied to the STARTER CONTROL VALVE, the valve is opened. This allows compressed air to flow to the air turbine starter, and also closes the contacts of the AIR VALVE POSITION SWITCH. The yellow STARTER VALVE LIGHTS illuminate to show the operator the STARTER CONTROL VALVE is open. The air turbine starter now causes engine rotation.

If fuel enrichment is needed the PRIMER SWITCH must be depressed and held in the ON position until the engine reaches 16%. Power is then supplied through the PRIMER RELAY contacts and the TEMPERATURE DATUM RELAY contacts, energizing the PRIMER VALVE SOLENOID.

When the engine reaches approximately 16% rpm, the SPEED SENSITIVE CONTROL mechanically actuates the 16% switch from <16% to >16%. Power is then routed through the <65% switch contacts, energizing the IGNITION RELAY. Power then flows through the IGNITION RELAY contacts, energizing the FUEL PUMP PARALLELING SOLENOID, the DRIP VALVE SOLENOID, and the IGNITION EXCITER. Power is also sent to the FUEL CONTROL SHUTOFF VALVE, allowing fuel to enter the engine fuel manifold. Extra fuel for fuel enrichment (if used) is sent to the temperature datum valve. The TEMPERATURE DATUM RELAY is maintained energized by a holding circuit that consists of the lower TEMPERATURE DATUM RELAY contacts and the FUEL MANIFOLD PRESSURE SWITCH.

As engine speed increases, the fuel pressure increases. When the fuel manifold pressure reaches 50 psig the FUEL MANIFOLD PRESSURE SWITCH opens, causing the TEMPERATURE DATUM RELAY to deenergize, stopping fuel enrichment. When the secondary fuel-pump pressure exceeds 150 psig, a paralleling light is illuminated to show the operator that the fuel pump is operating in parallel.

At approximately 65% rpm the 65% switches in the SPEED SENSITIVE CONTROL open to deenergize the IGNITION RELAY. The IGNITION RELAY removes power from the IGNITION EXCITER, the FUEL PUMP PARALLELING SOLENOID, and the DRIP VALVE SOLENOID. The fuel pump now operates in series and the DRIP VALVES are held closed by fuel pressure in the fuel manifold. The STARTER CONTROL VALVE and the ENGINE START SWITCH lose their common ground, and current flow ceases through those circuits. The STARTER CONTROL VALVE closes, stopping air flow to the air turbine starter, and the ENGINE START SWITCH opens. The AIR VALVE POSITION SWITCH opens, causing the STARTER CONTROL VALVE LIGHT to go out. This completes the engine-start cycle.

When engine speed increases above 94%, contacts in the SPEED SENSITIVE CONTROL (circuit not shown) deenergize the temperature datum valve take solenoid, reducing the amount of fuel take capability from 50% to 20%. The fifth and tenth stage bleed air valves are also closed at this time. When the power lever is advanced above 66° of coordinator travel, the temperature datum system is switched from the temperature limiting range of operation to the temperature controlling range of operation.

AIRCRAFT PROPELLER SYNCHROPHASING

The propeller synchrophaser system discussed here is common to the P-3 and C-130 aircraft, which use T-56 turboprop engines. The purpose of this discussion is to explain the electrical operation of controlling and synchrophasing the hydromatic propellers of multiengine aircraft.

PROPELLER GOVERNOR

A propeller governor is a control device that is used to control engine speed by varying the pitch of the propeller. Increasing the propeller pitch adds load on the engine in terms of increased thrust of the propeller, thereby reducing engine speed; conversely, decreasing the propeller pitch reduces engine load and therefore increases its speed. Hence, engine speed is a function of propeller pitch. Furthermore, if the propeller governor setting remains unchanged, any variation of power produced by the engine is translated into a corresponding variation of propeller thrust by varying the propeller pitch while engine speed remains constant. Optimum efficiency of an engine is best realized when its speed is constant; therefore, the propeller governor serves in achieving engine efficiency.

The pitch of hydromatic propeller blades is varied hydraulically by porting oil that has been boosted to the required pressure onto the propeller piston which is located in the propeller dome. The action on the piston is transmitted through a geared cam mechanism which rotates the propeller blades to the pitch desired.

The governor is the constant speed control device used in conjunction with the hydromatic propeller. The output oil of the pump can be directed to either the inboard or the outboard side of the propeller piston.

Propeller operation is divided into two separate ranges—the flight range, which includes the takeoff roll after the power levers are moved forward for takeoff, and the ground operating range in which the power levers are aft of the flight—idle gate. In the ground operating range (taxi range), propeller blade angle is determined directly by the power lever position through a hydromechanical system which meters oil pressure to either the increase or decrease side of the propeller dome. As the power lever is moved forward, toward FLIGHT IDLE, there is a simultaneous increase in blade angle and increase in fuel flow to the engine to provide the increased power demanded. As the power lever is moved aft from FLIGHT IDLE, blade angle decreases and fuel flow decreases, thus reducing power. As blade angle decreases to the point at which the propeller is delivering negative thrust, fuel flow begins to increase. Reverse power continues to increase until the power levers reach the full aft position. During operation in the ground operating range there is no electronic governing.

In the flight range of operation, when the power lever is forward of the flight-idle gate, a flyweight governor driven by propeller rotation mechanically controls propeller speed. In normal operation the pitch-change oil is directed through the feather valve to either the increase-pitch or decrease-pitch portion of the propeller, so that approximately 100 percent rpm is maintained.

SYNCHROPHASING

The synchrophaser has different functions, depending upon the mode of governing selected by the flight crew. In a mechanical governing mode, the synchrophaser does not function and the mechanical governor controls blade pitch, and hence propeller rpm, during flight. In a normal governing mode, the synchrophaser supplements the mechanical governor by limiting engine transient speed changes from rapid power lever movement, or to changes in flight conditions affecting propeller speed.

In a synchrophasing governing mode, the synchrophaser supplements the mechanical governor by maintaining all propellers at the same rpm and, furthermore, by maintaining a preset phase relationship between the No. 1 blade of the master propeller and the No. 1 blades of each of the slave propellers. This serves to reduce noise and vibration in the aircraft. In the synchrophasing mode, the synchrophaser also provides the limiting of transient speed changes as it does in normal governing.

DESCRIPTION OF MAJOR COMPONENTS

The synchrophaser system consists of four main units: (1) the pulse generator, (2) the phase and trim control, (3) the speed-bias servo assembly, and (4) the synchrophaser. (See fig. 8-8.)

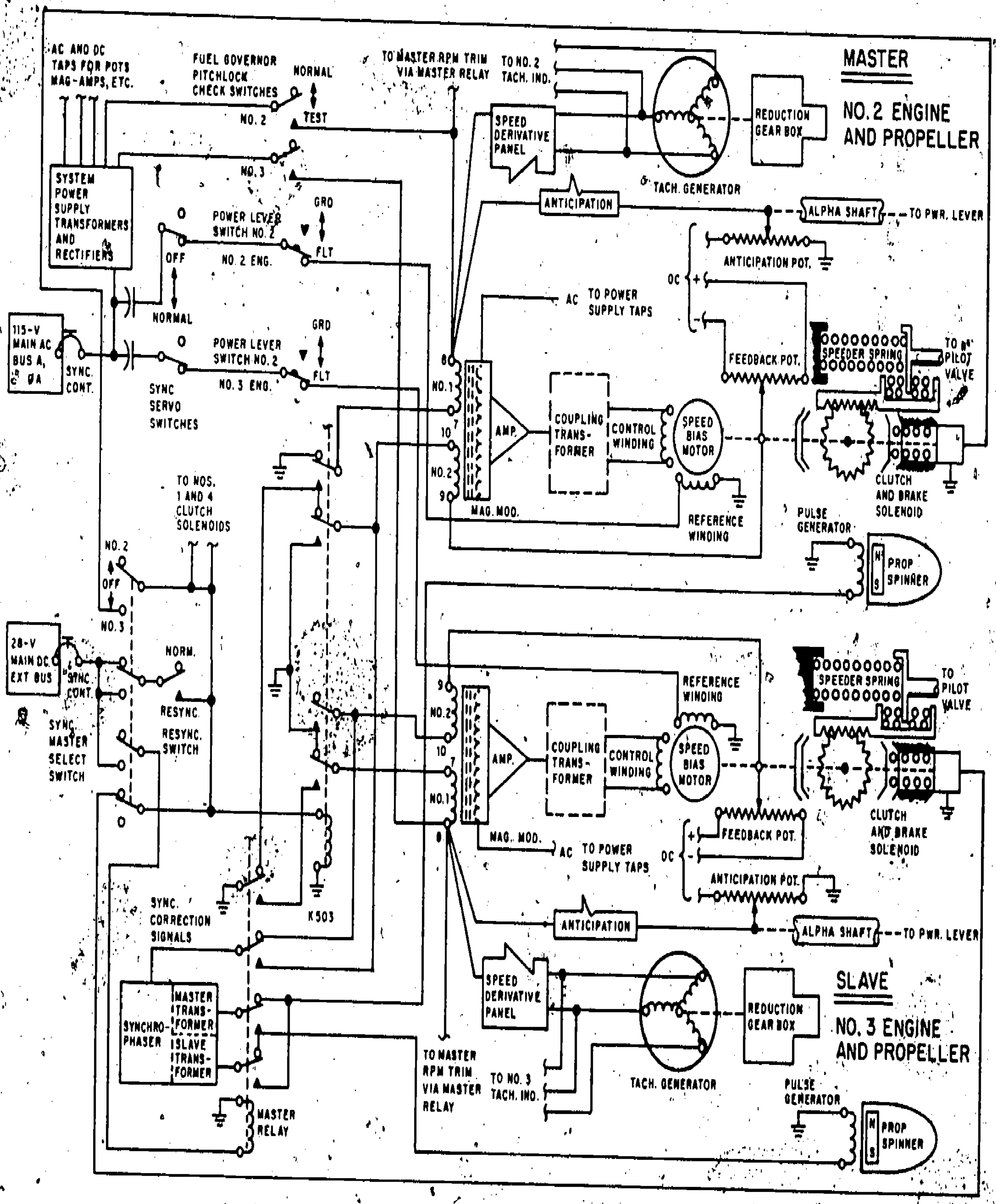

Figure 8-8.—Synchrophaser control schematic diagram.

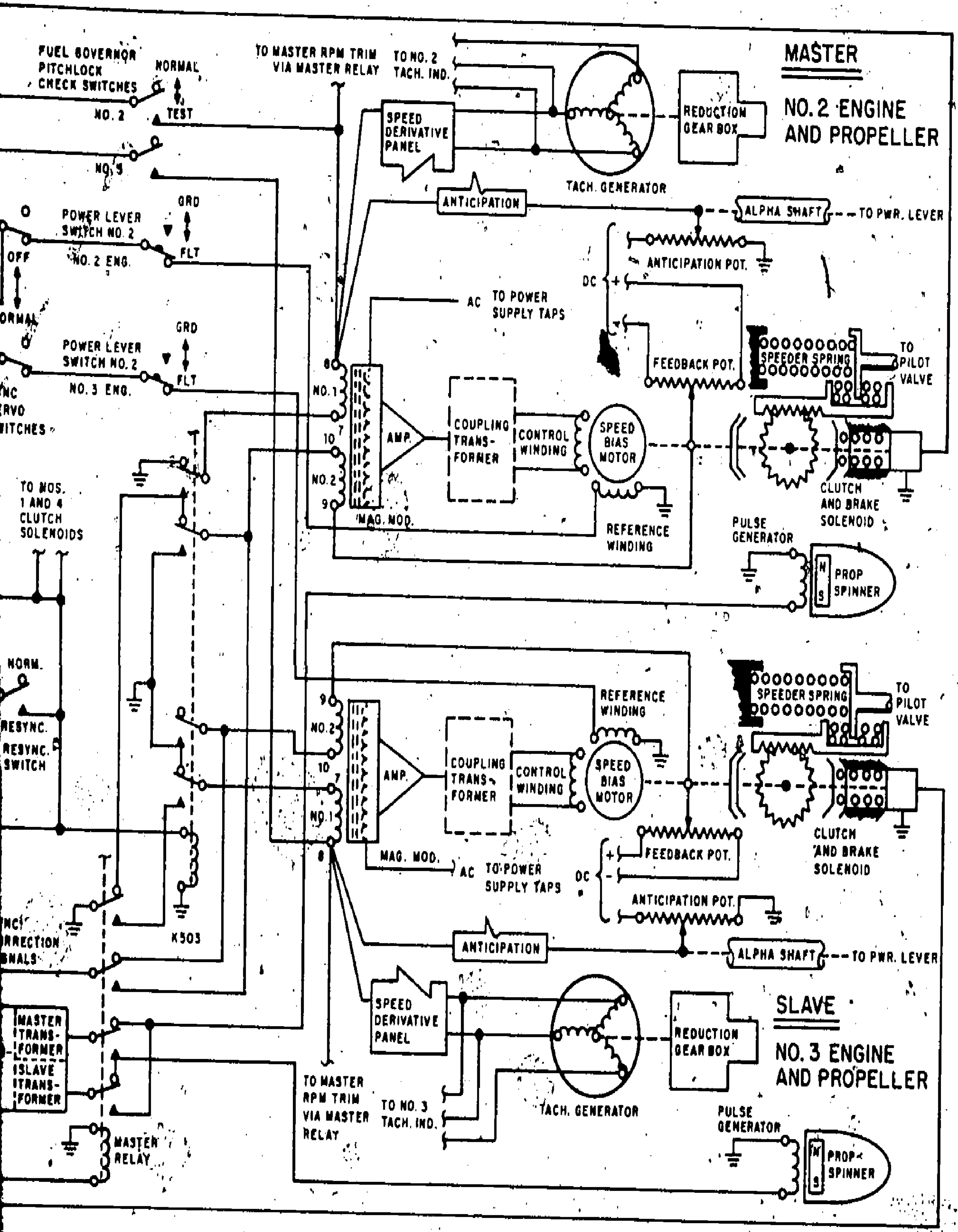

Figure 8-8.—Synchrophaser control schematic diagram.

208.225

Pulse Generators

The pulse generator provides the information needed by the synchrophaser system to produce speed and phase control of the aircraft propellers. Each propeller has a pulse generator which consists of a permanent magnet mounted on the propeller spinner and a stationary coil mounted in the governor control in close proximity to the rotating permanent magnet. A pulse is generated each time the permanent magnet passes by the coil; in other words, one pulse is generated for each revolution of the propeller.

Phase and Trim Control

The phase and trim control functions as a means of setting the phase relationships between master and slave propellers, and as a means of trimming the master engine.

The phase and trim control consists of seven potentiometers which receive a fixed dc voltage from the synchrophaser. The wiper of the master trim potentiometer supplies a voltage through the master select switch to the synchrophaser to trim the speed of the master engine. The other six wipers are connected to relay contacts which separate the wipers into two groups of three per group, corresponding to engines 1, 3, and 4 when engine 2 is master and engines 1, 2, and 4 when engine 3 is master. These wipers supply bias voltages to the phase correction circuits of the synchrophaser to set propeller phase angles of other than 0°

Speed-Bias Servo Assembly

The speed-bias servo assembly functions as a means of translating synchrophaser electrical signals into a mechanical bias on the speeder spring in the mechanical governor.

The synchrophaser supplies the electric motor with a reference voltage which is 90° out-of-phase with the aircraft 400-Hz source. The synchrophaser also supplies a control voltage which is either in-phase or 180° out-of-phase with the aircraft 400-Hz source. Hence, the in-phase control voltage lags the reference voltage by 90° and results in counterclockwise motor rotation when viewed from the output gear of the electric brake. The 180° out-of-phase control voltage leads the reference voltage and causes clockwise rotation. The amplitude of the control voltage determines motor speed and torque output.

The motor drives a reduction gear train which in turn drives a potentiometer wiper and the electric brake. The potentiometer receives a fixed dc supply from the synchrophaser across its resistive element. When the motor rotates, the wiper transmits a corresponding feedback voltage to signal winding No. 2 of the magnetic modulator. The electric brake has a clutch controlled input and output shaft. The output shaft drives a lever which biases the speeder spring in the propeller governor. Energizing the clutch decouples the two shafts, locking the output shaft and leaving the input shaft free to turn.

The Synchrophaser

The synchrophaser has four channels (only two channels are shown in fig. 8-8) which correspond to the aircraft's four engines. Each channel has a push-pull power amplifier which feeds the control winding of its corresponding servomotor in the speed-bias servo assembly. The inputs to the push-pull amplifiers are furnished by magnetic modulators which use dc control current to provide a phase and amplitude controlled ac output to the amplifiers. Accordingly, all synchrophaser signal inputs are changed by the synchrophaser to dc voltages proportional to the error before being applied to the modulator. The modulators are the signal summing devices for the two operational modes of the synchrophaser.

The magnetic modulators function on a core saturation basis. Each modulator consists of a dc bias winding, a 400-Hz excitation winding, and two control windings (signal winding No. 1 and signal winding No. 2). With no signals applied elsewhere, the 400-Hz excitation voltage appears as a 400-Hz output of negligible amplitude due to the current in the bias winding. Any current in either or both signal windings will change the output. The magnitude of the current in the signal windings controls the amplitude of the output; the direction of the current controls the phase of the output. Thus, current from pin 10 to 9 in winding No. 2, and current from pin 8 to 7 in winding No. 1 of any modulator produces a 180° out-of-phase voltage with respect to the excitation voltage. Current in the opposite direction in the signal windings produces an in-phase voltage. Simultaneous currents flowing in opposite directions in the two signal windings produces a signal which is the algebraic sum of the two generated signals. The moudlator thus produces a 400-Hz signal which is either in-phase or 180° out-of-phase with the excitation voltage. This signal is amplified and fed to the servomotor control winding. The 400-Hz voltage in the reference winding of the servomotor is applied through a series capacitor which gives the voltage a 90° phase shift with respect to the aircraft power source. Appropriate signals to the modulators can cause clockwise or counterclockwise rotation of the motor because of the phase difference in the motor windings. The use of the two signal windings in the modulators along with appropriate relay switching permits the two modes of operation of the synchrophaser—normal governing mode and synchrophasing mode.

OPERATIONAL MODES

The normal governing mode is used to provide improved engine response to transient rpm changes. In this mode, the synchrophaser receives signals from the power lever anticipation potentiometers and the engine tachometer generators. Signals from these result in a temporary resetting of the mechanical propeller governor to compensate for power lever changes and engine speed changes, thus limiting engine overspeeds or underspeeds.

The synchrophasing mode is used to synchronize engine speeds, to regulate propeller phase angles, and to maintain the limiting features of normal governing mode. In the synchrophasing mode, one engine (2 or 3) is selected as the master. The master engine operates in normal governing mode while the other three engines (slaves) follow changes in speed or phase of the master within preset limits. (Fig. 8-8 shows the synchrophaser control schematic diagram with engine No. 2 selected as master and engine No. 3 is slave. Slave engines 1 and 4, which operate the same as slave engine No. 3, are omitted for clarity.)

Normal Governing Mode

In normal governing mode, the propeller governor switch is in the NORMAL position and the power lever switch is closed, thus providing reference voltages to the servomotors. The synchrophase master switch is OFF and the PROP RESYNCH switch is in NORMAL. All relays are deenergized, resulting in the speed and phase error circuits being grounded. Each phase- and speed-error signal side of every magnetic modulator signal winding No. 2 (pin 10) is terminated on a dummy load (fig. 8-9) within the synchrophaser, while the other side (pin 9) is connected to the feedback circuit in the speed-bias servo assembly. The controlling signals are applied to signal winding No. 1 (pin 8) of each modulator. All channels function identically while in the normal governing mode.

THROTTLE LEVER ANTICIPATION.—Any power lever movement causes a change in dc voltage at the anticipation potentiometer wiper which serves as a voltage divider for the RC circuit. The charging voltage for the capacitor is directly proportional to the position of the power lever. The change in charge on the capacitor is directly proportional to the rate at which the power lever is moved. If the power lever is moved to decrease engine power, the capacitor charges up to a more positive voltage value, resulting in a current from pin 7 to pin 8 in signal winding No. 2 of the magnetic modulator. A lagging voltage surge appears in the servomotor control winding, causing counterclockwise rotation which resets the mechanical governor towards decrease pitch to compensate for the reduced power setting. As the servomotor rotates, the feedback potentiometer begins cancelling the error signal by causing a current in signal winding No. 2 such that its magnetic field is in opposition to the magnetic field produced by the signal current in winding No. 1. This stops the servomotor. As the anticipator capacitor continues to charge to its new peak value, the current in signal winding No. 1 decays to zero. The feedback potentiometer, still applying voltage to signal

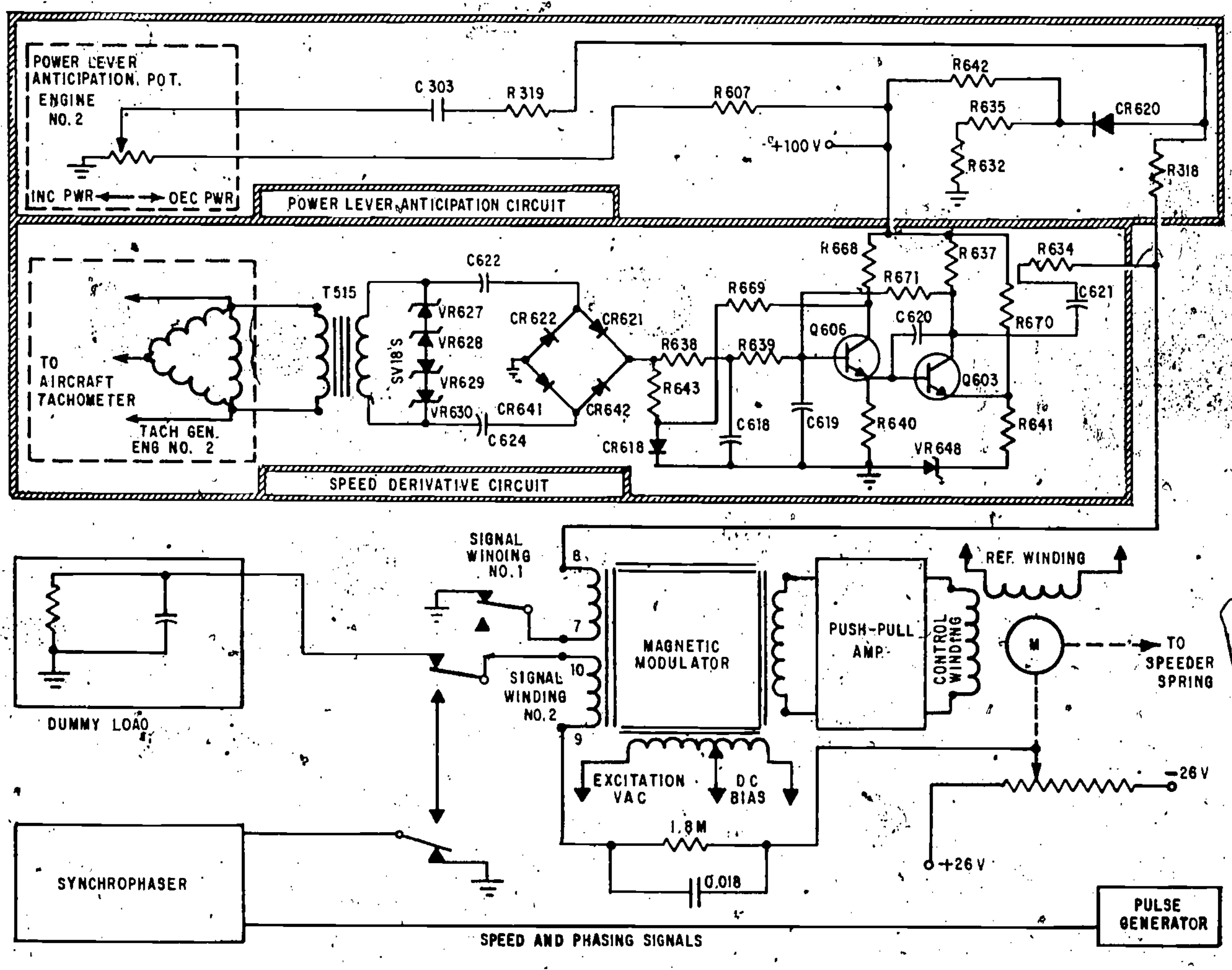

208.226

Figure 8-9.—Power lever anticipation and speed derivative circuits in normal governing mode.

winding No. 2, results in a leading voltage to the servomotor control winding and returns the motor to its original position, which corresponds to a zero-volt feedback potentiometer position. Had the throttle lever been retarded very rapidly, the peak voltage would have overcome the reverse bias on diode CR620 (fig. 8-9), which would limit the signal value to prevent overcompensation toward a flat blade pitch. For an increase in engine power the capacitor discharges, causing a current in the opposite direction in signal winding No. 1, which results in a temporary resetting toward increase pitch. The amount of reset in either case depends on the rate at which the lever is moved. Mechanical stops in the speed-bias servo assembly limit speed resets to plus 10 and minus 10 percent regardless of the applied signal. Furthermore, stops in the propeller control valve housing linkage reduce the limits to plus 6 and minus 4 percent.

LIMITING ENGINE TRANSIENT SPEED CHANGES.—The speed derivative circuit in the synchrophaser (fig. 8-9) senses changes in engine rpm and produces output signals which dampen the engine rpm changes. The speed derivative circuit does this by translating the frequency changes received from one phase of the tachometer generator into signal voltages. The magnitudes of the signal voltages vary at the rate the tachometer generator frequency changes. The signal voltage is fed to signal winding No. 1 of the magnetic modulator where it is summed and sent to the push-pull amplifier. It is then amplified and fed to the servomotor control winding. The servomotor adjusts the tension of the speeder spring which initiates a change in propeller pitch, thus dampening the change in engine rpm.

The action of the speed derivative circuit is further described as follows: The voltage produced on the collector of transistor Q603 is proportional to the output frequency of the tachometer generator. When engine rpm is constant, the voltage on the collector is constant and capacitor C621 is charged through resistor R634 and signal winding No. 1 of the magnetic modulator. Current in signal winding No. 1 decays to zero as the charge on capacitor C621 reaches the potential on the collector of transistor Q603. When engine rpm changes, a change in the collector voltage of transistor Q603 proportional to the change in tachometer generator frequency causes capacitor C621 to change its charge at the rate in which the tachometer generator frequency is changing. This produces a current in signal winding No. 1 whose magnitude varies at the rate at which the engine is varying offspeed, and whose direction is such that the amplified signal in the servo-bias assembly control winding drives the servomotor in a direction to dampen the drift in engine rpm.

Speed error signals in signal winding No. 1 from the speed-derivative circuit are canceled in the same manner as anticipation signals from the anticipation circuit are canceled.

The speed-derivative and power-lever anticipation circuits are much more sensitive to engine rpm changes than the flyweight speeder spring in the mechanical governor. Therefore, the governing action of the flyweight and speeder spring improves the mechanical governor's response to changes in power-lever settings and to changes in engine rpm.

Synchrophaser Mode

In adding synchrophasing to normal governing mode, either ENG 2 or ENG 3 is selected by the synchrophase master switch (fig. 8-8). When the master engine is selected, relays are energized which remove the dummy loads from signal winding No. 2 of all magnetic modulators, except the modulator of the master channel. Also, the outputs of the speed-error and phase-error circuits of each synchrophaser channel (except the master) are removed from ground and connected to signal winding No. 2 of their respective modulators. While the slave engines are in synchrophasing mode, the master engine remains in normal governing mode only. Essentially, pulses from the master engine are formed into sawtooth waves and [illegible] compared with the pulses from each of the slave engines in the respective slave channel sampling circuits. If slave pulses are not in phase with the master pulse (sawtooth), errors are detected in the respective synchrophaser channel. The errors are then fed to signal winding No. 2 of the channel magnetic modulator where they are summed with any error signals that may exist in signal winding No. 1. The resultant of the error signals is amplified and fed to the control winding of the respective speed-bias servomotor, which alters the tension of the slave governor speeder spring, thus correcting for engine speed differences and propeller blade angle errors. (One channel of the synchrophasing circuit is shown in figure 8-10.)

Phase- and speed-error sensing is described in the following paragraphs.

SAWTOOTH FORMER.—The pulse from the master pulse generator is transformer-coupled to the sawtooth former, whereas the slave pulse generators are trasformer-coupled to the channel sampler circuits. Figure 8-11 (A) and (B) illustrates the master pulse and the resultant sawtooth formed in the sawtooth former.

SAMPLING CIRCUITS.—Pulses from the three slave engines are coupled to the grids of the sampling circuit tubes, while the sawtooth voltage is applied to the plate of one tube and the cathode of the other tube in all sampling circuits. The positive going portion of the slave pulse places the tubes in a conductive state. (Since sampling is the same in all channels, only one channel is discussed.) Referring to figure 8-10, if the sawtooth is at zero potential at the

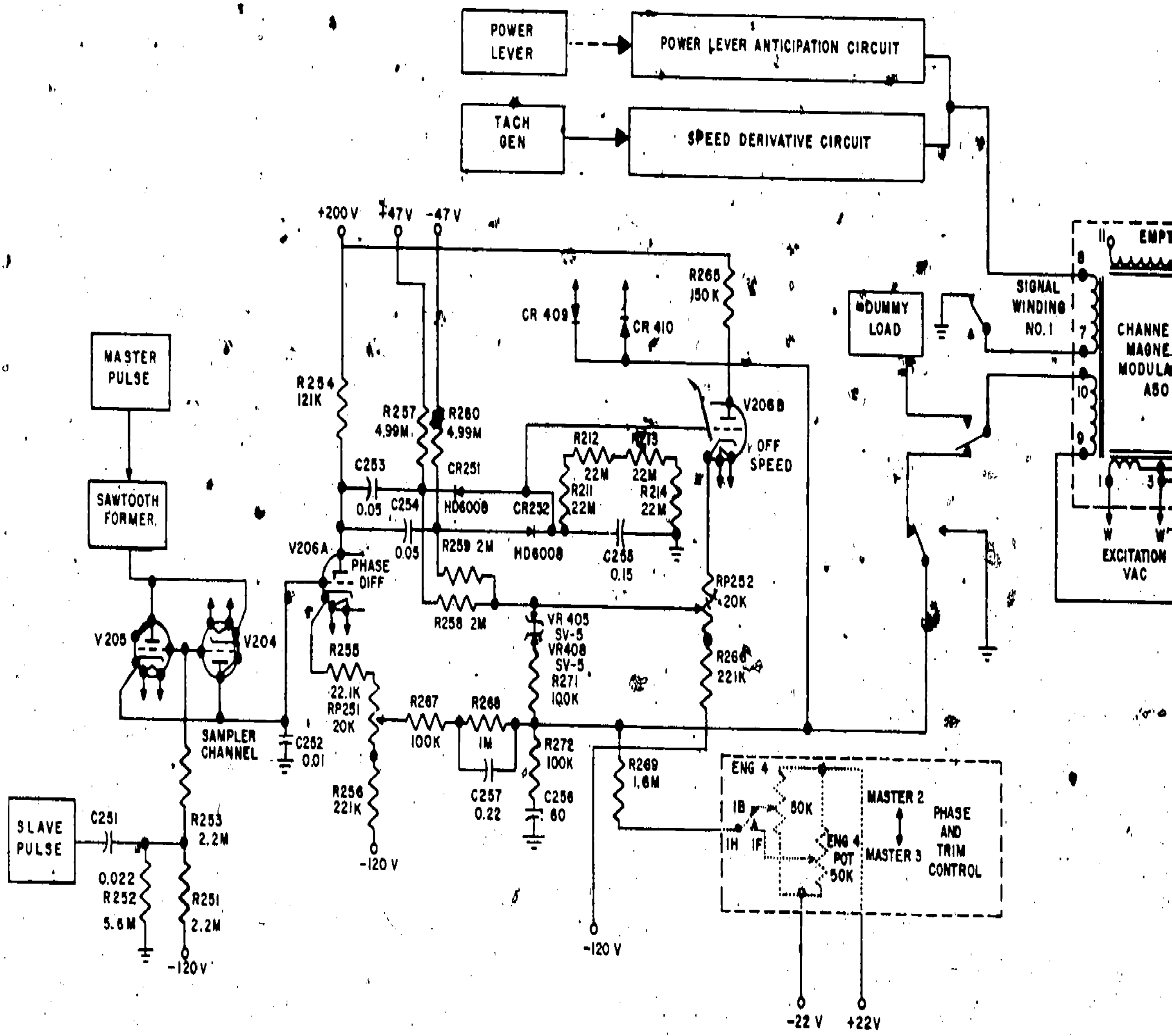

Figure 8-10.—Synchrophaser schematic diagram, synchrophaser mode (slave channel).

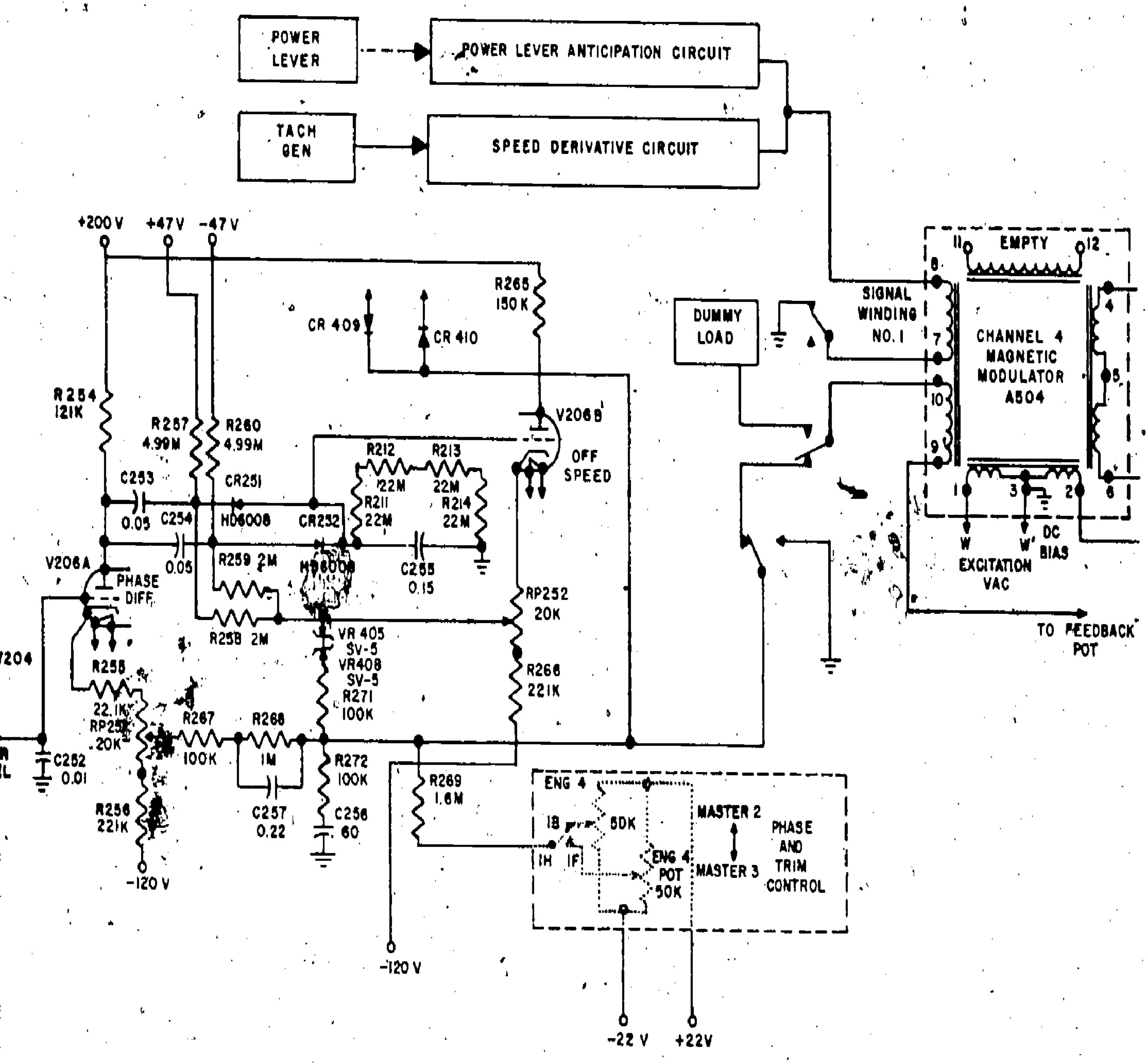

208.227

Figure 8-10.—Synchrophaser schematic diagram, synchrophaser mode (slave channel).

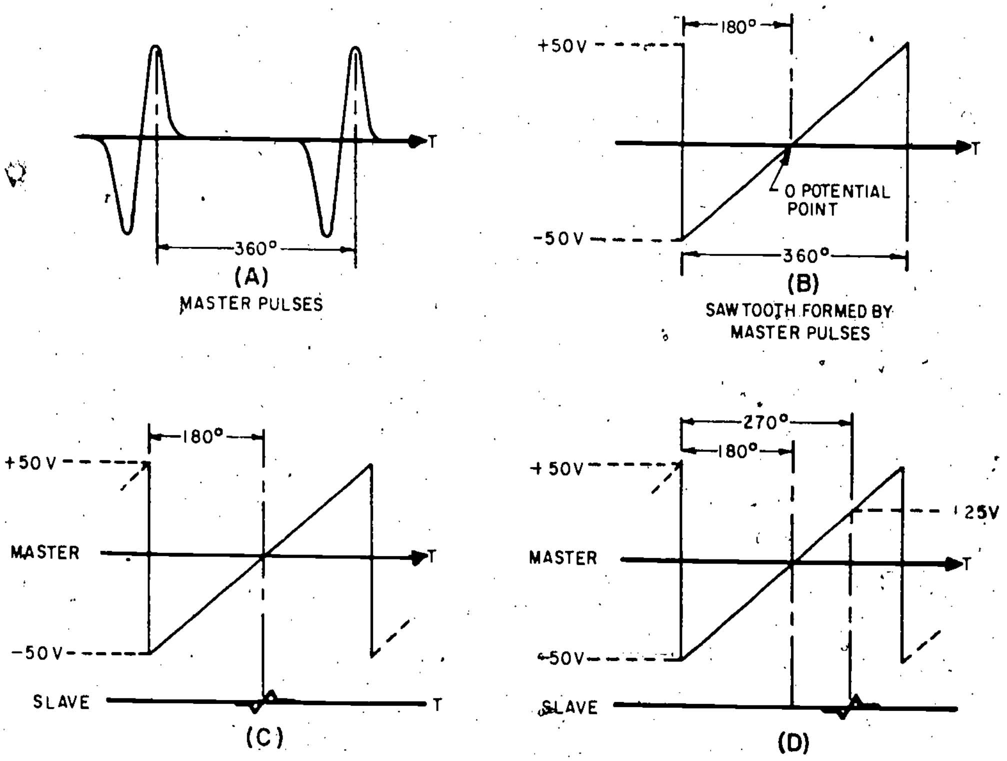

208.228

Figure 8-11.—Master and slave pulse comparisons.

time the slave pulse occurs, neither tube conducts and no signal is applied to the phase difference and speed-error circuits. If the sawtooth is in the positive region at this time, tube V205 conducts. The corresponding voltage changes are applied to the grid of phase difference tube V206A.

The nature of the sampling action can be seen by referring to figure 8-11. The time interval between master pulses is the time interval for 360° of propeller rotation as shown in figure 8-11(A). The time interval of the sawtooth which is generated by the master pulse is 360° as shown in (B). The half-time interval, or 180° position, is the sawtooth zero potential point as shown in (C). When the slave pulse occurs at the zero point, the propellers are on-phase and there is a 180° phase difference between them. All references to slave pulses are given with respect to the 360° interval, and the point of occurrence of the slave pulse determines the magnitude of signal developed in the sampler circuit as shown in (D). This signal represents the phase difference between propellers.

NOTE: Since the propellers are four bladed, the relative blade position between the master and slave propellers is exactly the same when the slave propellers differ from the master by one-half revolution. Therefore, a 180° phase difference is considered as an on-phase condition in pulse comparisons.

PHASE DIFFERENCE CIRCUITS.—The phase difference circuits receive the voltages generated in the sampling circuit at the grids of the respective tubes. With a 180° phase difference signal at the grid of V206A (fig. 8-10), the voltage at the wiper of potentiometer RP251 is adjusted to null or zero volts. This voltage changes proportionally with the grid signal from the sampling circuit, and hence represents the phase difference between propellers. The effect of this voltage on synchrophaser output is discussed subsequently.

OFF-SPEED CIRCUITS.–When the propeller goes offspeed, the sampling circuit senses the condition as a sharp voltage change. (When the slave propeller is on-speed, the slave pulses occur at the same time interval in each successive sawtooth cycle.) When an underspeed or overspeed condition develops, the slave pulse occurs at a different position for each sawtooth cycle until, at one point, the slave pulse falls up or down the sawtooth (fig. 8-12). This can be thought of as a phase error which occurs too rapidly for the phase-error circuit to compensate for. During an underspeed condition, the voltage applied to the phase difference tube suddenly changes from positive to negative. (See fig. 8-12(A).) For an overspeed condition, the voltage suddenly changes from a negative to a positive.

The action of the off-speed circuit is described as follows: The underspeed voltage change registered in the plate circuit of the phase difference tube is coupled to the offspeed circuit by capacitors C253 and C254. (Refer to fig. 8-10.) The voltage change in the plate circuit is positive and the reverse bias on diode CR251 is reinforced, but the reverse bias on diode CR252 is momentarily overcome, allowing capacitor C255 to charge positively. Capacitor C255 discharges slowly through its parallel resistive network and maintains a grid bias on the off-speed tube V206B. (For an overspeed, diode CR251 conducts and charges capacitor C255 negatively.) Successive sharp voltage changes add to the charge on capacitor C255 until the off-speed condition is corrected. Like the phase difference circuit, the off-speed circuit has a zero-volt adjustment potentiometer in the

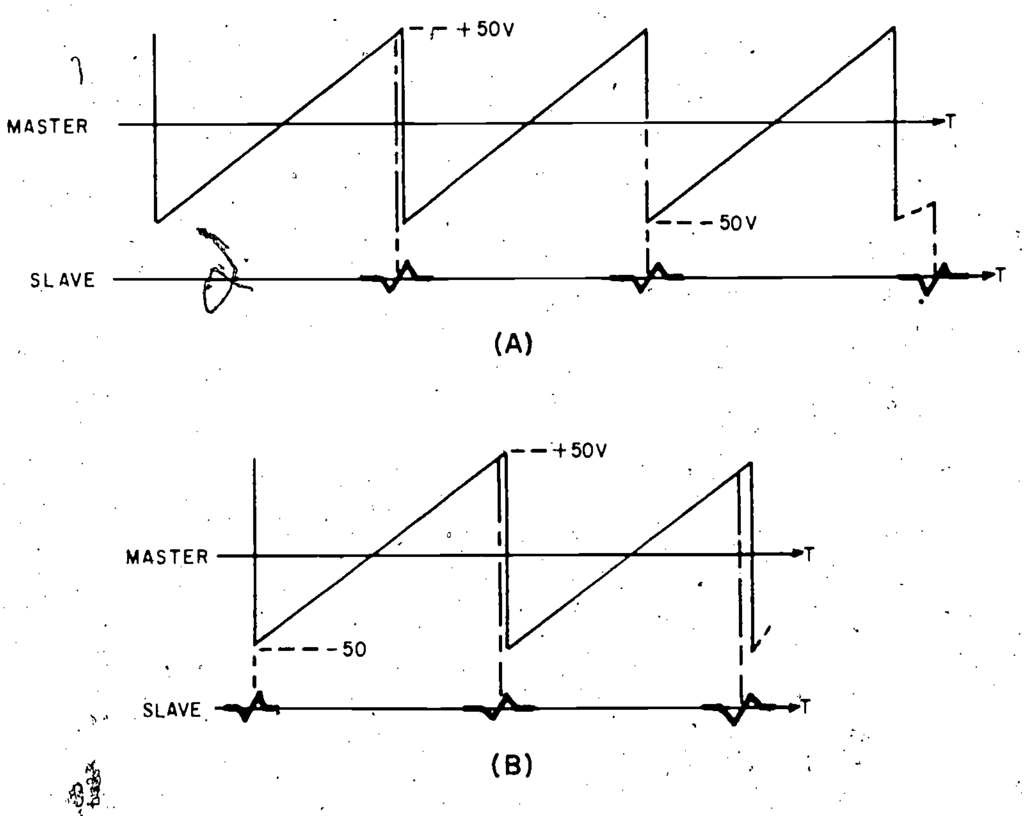

Figure 8-12.–Off-speed pulse comparison. (A) Slave underspeed; (B) Slave overspeed.

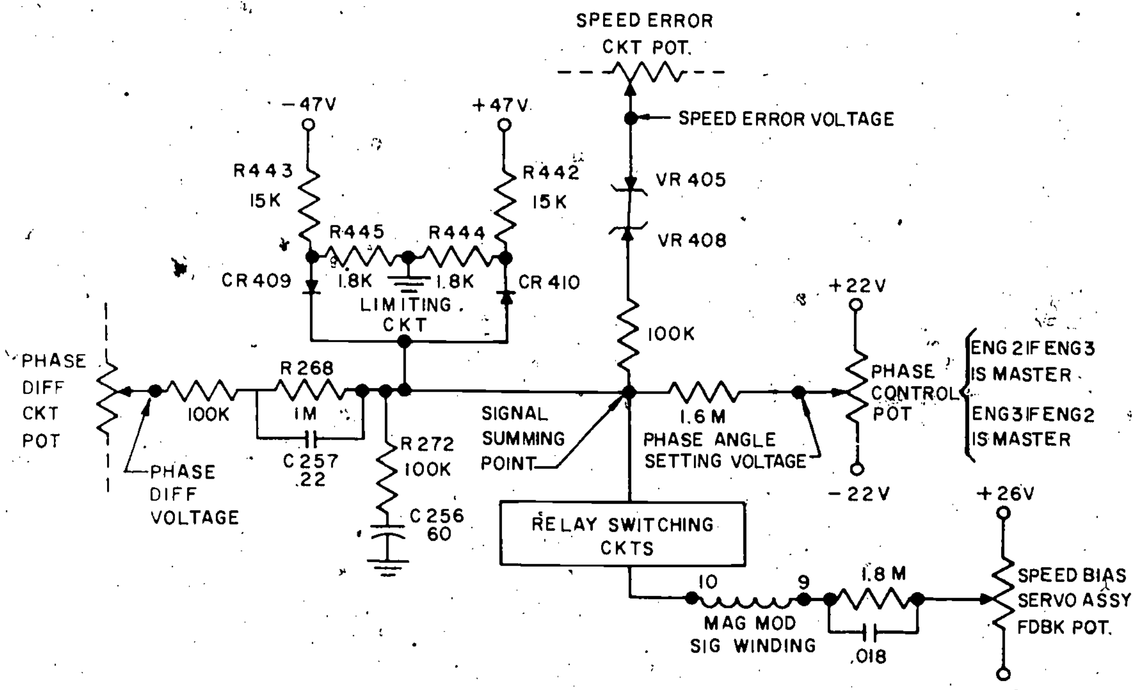

208.230

Figure 8-13.—Simplified schematic of signal summing.

cathode circuit. The pulsating voltage generated at the wiper by the changing grid bias on the tube is called speed-error voltage. The effect of this voltage is discussed subsequently.

SIGNAL SUMMING.—As shown in figures 8-10 and 8-13, the phase difference and speed-error voltages are coupled to the signal summing point. Also connected to this point are the limiting circuit, the phase-control potentiometer, and magnetic modulator signal winding No. 2. Any difference in potential between the signal summing point and the feedback potentiometer causes a current in the modulator winding. This results in motor movement which, in turn, causes the feedback potentiometer to null whatever potential is at the summing point.

PHASE-ERROR CORRECTION.—When the slave propellers are not on-phase, the phase difference voltage acting through the averaging circuit to the summing point causes speed-bias servomotor rotation to correct the off-phase condition, provided the phase control potentiometer (fig. 8-13) is set for zero volts. In this case the phase difference voltage actually represents phase error. However, if it is desirable to have a slave propeller maintain a specific angle of lead or lag with the master propeller, then the phase control potentiometer is adjusted to cancel the phase difference voltage at the summing point. For example, to maintain a slave lead of 10° from the 180° position of the master pulse, the phase control potentiometer is adjusted to cancel the phase difference voltage which is generated when the slave propeller leads the master propeller by 10°. Thus, when the slave propeller leads by 10°, the net potential at the summing point is zero and the speed bias servomotor will not move. When the slave propeller changes from the 10° lead condition, the phase difference voltage changes, and the net potential at the summing point is the difference between the phase control potentiometer setting and the phase difference voltage. This is how the phase-error voltage and its magnitude depends on the slave propeller's degree of lead or lag from the 10° lead condition. The manual phase control is adjustable to allow a slave lead or lag of 45°.

SPEED-ERROR CORRECTION.–During the phase-error correction, Zener diodes VR405 and VR408 isolate the speed-error potentiometer from the signal summing point. When an off-speed occurs, these diodes conduct, connecting the speed-error circuit to the summing point. For large speed errors, the speed-error signal is a pulsating dc of very low frequency. At the same time, the phase-error signal is a rapid dc step voltage consisting of sharp potential changes which trigger the speed-error circuit. The dc step voltage changes developed in the cathode circuit of V206A (fig. 8-10), are averaged and effectively blocked by resistor R268 and capacitor C251. The sharp potential changes passing resistor R268 and capacitor C251 are leaked to ground by resistor R272 and capacitor C256, leaving the speed-error signal in control. When the engine reaches on-speed condition, but is still out-of-phase, the speed-error signal drops off until a point is reached where the Zener diodes stop conducting and the phase error signal assumes control.

TWO-PERCENT LIMITING.–The potential at the summing point is limited to plus or minus 5 volts by the limiting circuit (fig. 8-13, R442, R443, R444, R445, CR409, and CR410) which clips any signal outside of the range limit. In the case of the off-speed circuit, this limited signal provides only enough amplified output to drive the speed bias servomotor to correct for a two-percent speed change. This occurs because the motor movement results in a feedback voltage which cancels the speed-error signal. Thus, the slave propeller cannot follow large speed changes of the master engine, preventing a slave from following an overspeeding or underspeeding master.

Resynchrophasing

The need for resynchrophasing arises from the nature in which phase angle correction circuits operate. As phase errors occur, the servomotor rotates to correct the error. At the same time, the feedback potentiometer moves and cancels a portion of the error signal. As the phase error is corrected, the phase-error signal decreases until it matches the feedback signal. When this occurs, the potential at the summing point is zero and the motor stops moving, leaving a portion of the error uncorrected. This is insignificant for errors which occur about a set point–leading and lagging errors. However, for errors that continually occur in one direction, the uncorrected error accumulates and it can become large enough to reduce the efficiency of the system. To overcome this, a procedure is provided whereby the bias on the mechanical governor is locked while the servomotor recenters at a zero-volt feedback position. This is called resynchrophasing.

The resynchrophasing operation is as follows: While in synchrophase mode, the prop resynchrophase switch is placed in the RESYNCH position. This energizes the electric clutch-brakes on the slave engine speed-bias servo assemblies. The brakes lock the output shafts and the clutches decouple the input and output shafts, leaving the input shafts free to turn. Locking the output shaft retains whatever mechanical bias is present on the mechanical governor. At the same time, relay K503 (fig. 8-8) is energized, which opens the signal winding No. 1 circuits in the magnetic modulators. (The master channel remains in normal governing mode through a parallel ground provided by the master relay to signal winding No. 1 of the master channel modulator.) An instant later (a time delay sufficient to assure brake and clutch actuation before allowing the recentering action), relays are deenergized to remove the phase- and speed-error circuits from the slave channel magnetic modulators and connect the dummy loads. The only input to the slave channel magnetic modulators is now the feedback potentiometer acting into the dummy load through signal winding No. 2. A signal is then generated, driving the motors until the feedback voltage is zero. When the prop resynchrophase switch is released, all circuits return to the synchrophasing mode. The accumulated phase error can now be corrected.

TROUBLESHOOTING HINTS

When a trouble occurs in the electrical controls of the propeller system, the first step of troubleshooting is to determine which part of the system is malfunctioning. This can be determined by completing an operational check. The next step is to refer to the electrical schematic and the troubleshooting chart found in the Maintenance Instructions Manual for the aircraft, and then proceed to analyze the trouble.

Table 8-2 is a typical troubleshooting chart which illustrates a systematic approach for isolating faulty components or wiring in the synchrophaser system.

PROPELLER CONTROL SYSTEM

The propeller control system on the P-3 aircraft uses systems similar to those already discussed in this chapter. It is an integral part of, or works in conjunction with, the temperature datum control system, the propeller synchrophaser system, and propeller governing system. The discussion that follows is primarily concerned with propeller pitchlock, negative torque system, feathering, unfeathering, and autofeathering operations. Refer to figure 8-14 throughout this discussion.

PROPELLER

The four-bladed propeller converts engine shaft horsepower to thrust. The propeller consists of two principal sections: the rotating section comprises the blades, hub, spinner, and the dome which houses the pitch changing mechanism; the nonrotating section contains the

Table 8-2a.—Synchrophaser system troubleshooting

Trouble	Probable cause	Remedy
1. Steady overspeed or underspeed on one or more engines in synchrophasing mode.	Pulse generators.	a. If condition exists on a slave engine, check slave pulse input to synchrophaser. Adjust coil to magnet clearance replace parts, or correct aircraft wiring problem. b. If condition exists on all three slaved engines, check master pulse input to synchrophaser. Adjust coil to magnet clearance, replace parts, or correct aircraft wiring problem. c. If there is no problem with pulse inputs, replace the synchrophaser.
2. Steady overspeed or underspeed on one engine in normal governing.	Speed bias servo assembly feedback potentiometer.	a. Open circuit to feedback potentiometer on troublesome engine. Check for continuity from the synchrophaser connector to the potentiometer. Resistance into the feedback potentiometer should be approximately 7 to 10 kilohms.

254

Table 8-2b.—Synchrophaser system troubleshooting

Trouble	Probable cause	Remedy
2. Steady overspeed or underspeed on one engine in normal governing—Continued.		b. Wiring reversal in feedback potentiometer circuit. Remove propeller control valve housing cover. Check voltage polarity at potentiometer. Voltage at blue lead terminal should be positive with respect to ground. Voltage at the red/white lead terminal should be negative with respect to ground.
	Synchrophaser.	Replace synchrophaser.
	Resynchrophaser circuit.	Brake-clutch not being energized or not operative. Check for approximately +28 volts across red/yellow and gray (gnd) leads to brake-clutch. The voltage must be present on engine No. 2 when master No. 3 is selected, and on engine No. 3 when No. 2 is selected. The voltage must be present on engine No. 1 and No. 4 when either master is selected and the resynchrophase switch is actuated. If voltage is not present, check switches and aircraft wiring and repair or replace. If voltage is present, check to see if the brake lever is locked in position when voltage is applied and is released when voltage is removed. If not, replace propeller control valve housing.
3. Slave will not synchophase with one of the masters.	Pulse generator.	Check pulse input to synchrophaser from the troublesome master. Adjust coil to magnet clearance, replace parts, or correct aircraft wiring problems.
	Synchrophase master switch.	Check switch for correct wiring and transfer of circuits. Repair and replace.
	Synchrophaser.	Replace synchrophaser.
4. Slaves will not synchrophase with either master. (Does not follow master speed changes.)	Power source.	Check to see that synchrophaser is receiving 115-volt, 400-Hz operating voltage. If not, check aircraft wiring and circuit breakers. If voltage is present, check fuse on the front of the synchrophaser.
	Synchrophaser.	Replace synchrophaser.

Table 8-2c.—Synchrophaser system troubleshooting

Trouble	Probable cause	Remedy
5. One slave will not synchrophase (stays at one speed).	Speed bias servo, synchrophaser, propeller governor, or throttle lever switch.	The trouble must be isolated. Perform a fuel topping and pitch lock test on the affected engine. If engine overspeeds as normal for the test, the switches for the servomotor reference winding is good, the servo is good, and the synchrophaser amplifier is good. The servo feedback potentiometer circuit or the pulse generator may be causing trouble. Check pulse input from affected engine to synchrophaser. Check feedback potentiometer per trouble No. 2 in this table. If these check good and the fuel topping check is good, replace the synchrophaser. If fuel topping test is not normal, perform continuity checks on aircraft wiring and switches to the servomotor reference winding. If this is good, replace the synchrophaser and perform another fuel topping test. If response is not normal, check continuity to servo control winding. If good, replace the propeller control valve housing.
6. Master cannot be trimmed with phase and trim control.	Phase and trim control or synchrophaser.	Select other master. If this master can be trimmed, replace the synchrophaser. If both masters cannot be trimmed, replace phase and trim control. If replacement does not correct trouble, check aircraft wiring.
7. Overspeed or underspeed for throttle chop or burst. Response same as or worse than mechanical governing.	Throttle anticipation potentiometer or synchrophaser.	Remove propeller control valve housing cover. Observe that servomotor responds to throttle movements by driving the output lever. If no action is present, run a continuity check from the synchrophaser connector to the throttle anticipation potentiometer. Resistance across potentiometer should be approximately 250 kilohms. Check wiper to ground resistance using a 2-kilohm resistor in series with the meter. Set the throttle at full reverse. Resistance should be approximately 252 kilohms. Slowly advance the throttle to takeoff. Resistance should decrease smoothly to a value of approximately 2 kilohms. Slowly retard throttle to reverse. Resistance should follow by increasing smoothly to approximately 252 kilohms. If open is found,

Table 8-2d.—Synchrophaser system troubleshooting

Trouble	Probable cause	Remedy
		check aircraft wiring. If good, replace propeller control valve housing. If resistance change is not smooth and continuous, replace valve housing. If no problem can be found, replace the synchrophaser.
8. No speed stabilization. Cycles required to settle at governing rpm are the same as in mechanical governing after a speed change.	Tachometer generator or synchrophaser.	Check for tachometer generator voltage at synchrophaser connector with propeller at 100 percent rpm. Voltage should be approximately 16- to 23 volts rms. If no voltage or out-of limit voltage, check aircraft wiring or replace tachometer generator. If voltage is present, replace synchrophaser.
9. Erratic governing in synchrophasing mode or in normal governing.	Intermittent open or short in circuits.	a. This type of trouble must be found by carefully checking for loose contacts on all accessible connectors and components of the system. Poor connections are a likely cause of the trouble. b. Other possible causes are in intermittent throttle anticipation potentiometer, servo feedback potentiometer or phase and trim control potentiometer. c. When erratic governing is noted on all engines, it is possible that voltage transients in the 115-volt, 400-Hz supply to the synchrophaser are causing the trouble. Check supply voltage.
10. Small steady-state changes of 1/2 to 2 percent in engine speed in synchrophasing or normal governing.	Phase and trim control.	a. If changes occur in synchrophasing on all engines, phase and trim control or wiring between phase and trim control and synchrophaser may be the problem. Check wiring. If wiring is good, replace phase and trim control or the synchrophaser. b. If changes occur in synchrophasing on one engine, check pulse to synchrophaser for affected engine.

257

Table 8-2e.—Synchrophaser system troubleshooting

Trouble	Probable cause	Remedy
10. Small steady-state changes of 1/2 to 2 percent in engine speed in synchrophasing or normal governing—Continued.	Synchrophaser.	If changes occur in synchrophasing or normal governing on all engines regardless of selected master, replace synchrophaser.
	Speed bias servo assembly.	If changes occur in synchrophasing or normal governing on one engine, servo assembly clutch may be slipping. This can be determined by performing a fuel topping and pitch lock test. A shift in governing rpm after the test is completed indicates a slipping clutch. Replace the propeller control valve housing if this is the case.
11. Oscillations in engine speed in synchrophasing or normal governing.	Pulse generator.	If oscillations occur on all engines and only with one master, check the pulse from that particular master. Adjust coil to magnet gap or replace parts.
	Tach generator.	If oscillation occurs on one engine when in synchrophasing or normal governing, check tachometer generator. Excessive wear or play in the shaft or rough bearings can cause a variable frequency input which the synchrophaser interprets as change in engine speed. Replace the tachometer generator if any of the foregoing conditions exist.

pressure and scavenge oil pumps, the governor control mechanism, and the spinner afterbody. It is a constant-speed, full-feathering, reversing propeller, having the added features of pitchlock (to prevent excessive overspeed) and a combination synchronizing and synchrophasing system.

LOW-PITCH STOP ASSEMBLY

A mechanical stop assembly in the propeller dome is set to maintain a minimum desired low-pitch blade angle. When the power levers are positioned below 28 degrees, a cam operated backup valve in the propeller housing directs control oil pressure to collapse the low-pitch stop levers. The blades move toward the reverse position as directed by the power lever Beta schedule.

BETA FOLLOWUP SYSTEM

The Beta followup system provides a variable hydraulic low-pitch stop. At the FLIGHT IDLE power lever position, the Bet followup stop is set at about 10 degrees blac

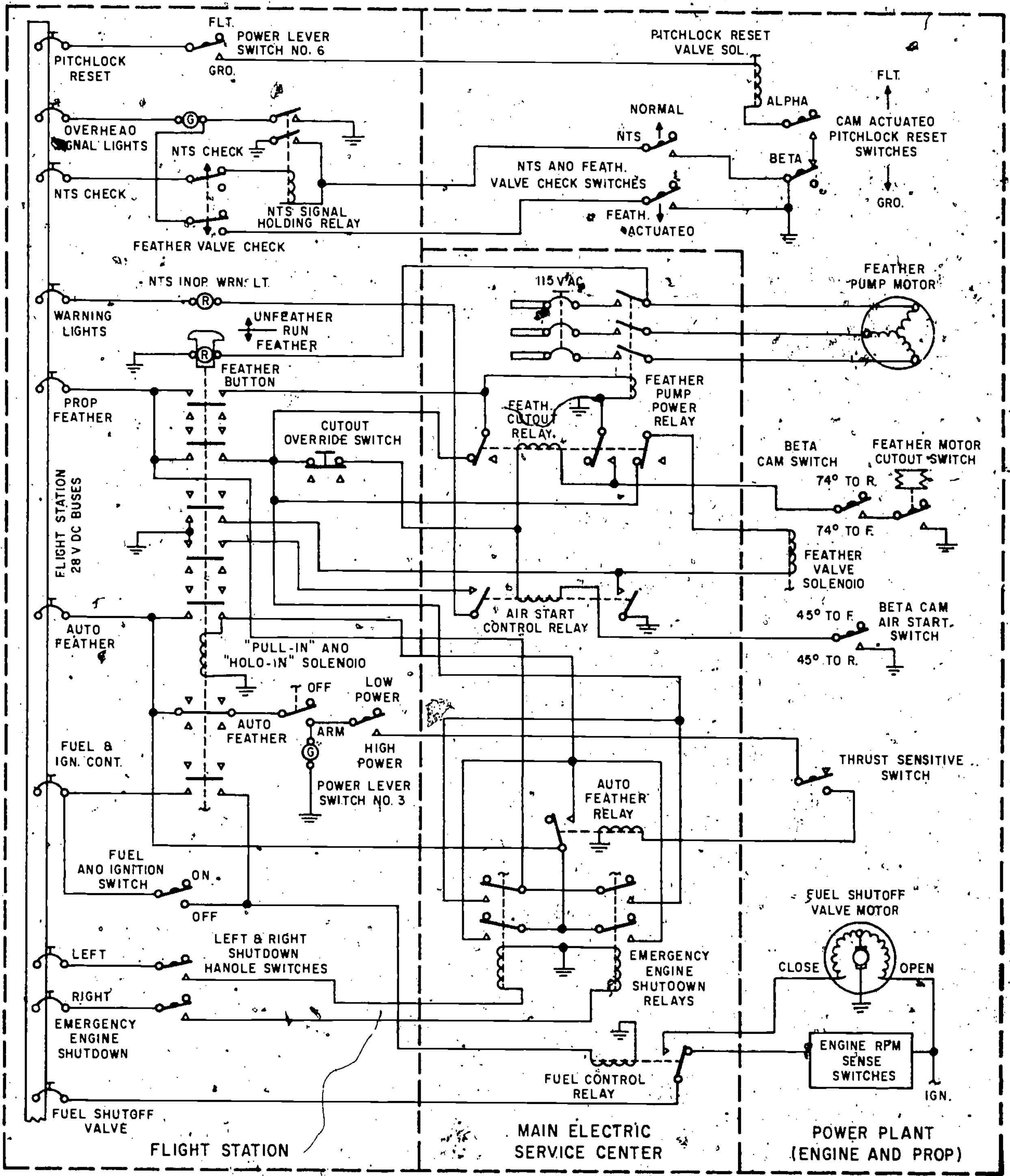

208.286

Figure 8-14.—Propeller control circuit.

angle; the mechanical low-pitch stop is set at 13 degrees. The purpose of the Beta followup stop is to provide a secondary low-pitch stop. As the power lever is moved toward TAKEOFF position and the blade angle increases, the mechanical low-pitch stop remains fixed at 13 degrees, but the Beta followup control programs the hydraulic stop in relation to power lever position to a maximum of 22 1/2 degrees. At this point, if a sudden engine failure occurs and the negative-torque system fails to operate, an excessive reduction in blade angle and associated violent yawing is prevented.

PITCHLOCK

A hydraulic, speed-sensitive pitchlock mechanism is contained in the propeller assembly to prevent overspeeding. It is completely automatic and prevents further decrease in blade angle when engaged. Automatic engagement can occur in two ways: first by loss of control oil pressure, and second, when rpm exceeds approximately 103.5%. The pitchlock governor, sensing the overspeed, allows the pitchlock teeth to engage, preventing further decrease in blade angle. Due to the design of the teeth, the blade angle can increase if the normal governing control is restored.

Blockout Ranges

There are certain blade angles where pitchlock does not operate. The pitchlock teeth are mechanically held apart from a plus 17 degrees to minus 14 degrees. This allows for rpm surges as blade angles are reduced during approach and landing. Also, pitchlock is blocked out at blade angles between 57 degrees and 86 degrees (full feather). This is necessary in order to decrease blade angle for air starting. Blade angles will be less than 57 degrees at 405 knots or limit Mach speed.

Pitchlock Reset

A reset system is incorporated to reset pitchlock up to 109% rpm at blade angles above 10 degrees with the power lever below 28 degrees coordinator. This 109% rpm setting of the pitchlock is momentary and necessary when the power lever is retarded very rapidly into the Beta range and the blade angle decrease is not quick enough, as in the case of an aborted takeoff and landing. In this condition the amount of fuel scheduled will cause engine speed to increase above 103% rpm.

Fuel Governor and Propeller Pitchlock Test Switch

Four two-position (TEST-NORMAL) switches, one for each propeller, are located on the engine check panel. When a switch is actuated to TEST position, the propeller speed-bias servo motor receives a continuous overriding signal which drives the mechanism full travel toward decrease pitch. This effectively resets the propeller governor to a speed of approximately 106% rpm to permit a ground check of the pitchlock and fuel governor functions.

NEGATIVE TORQUE SYSTEM

The negative torque system (NTS) protects the aircraft from excessive drag by limiting the negative torque from the propeller to a predetermined value range of -150 to -500 indicated horsepower. During a negative torque condition the NTS provides a mechanical signal, overriding the governing action of the propeller and increasing the blade angle. When the propeller blades reach a position where the propeller no longer is developing negative torque, the propeller governor retains control and maintains 100% rpm. In the event the negative torque condition persists, a cycling action will continue from the mechanical signal to propeller governor, and vice-versa, until some corrective action is taken.

NTS INOP Warning Light

An NTS INOP warning light illuminates when the 45-degree airstart blade angle circuit is energized. The airstart blade angle system is installed to limit negative horsepower during in-flight unfeather operations with failed NTS. The blades, upon reaching 45 degrees, energize the airstart blade limit circuit, actuating the feather valve to the feather position. The blades moving toward the feather position open the circuit, deenergizing the feather solenoid valve. The result of this action is a cycling of the blades around the airstart blade angle switch. For ground unfeather operation, the airstart blade limit switch is bypassed by actuating the feather pump pressure cutout override switch to the OVERRIDE position while the propeller is unfeathering.

PROPELLER FEATHERING

Feathering is initiated by pulling the engine emergency shutdown handle, by autofeathering, or by depressing the feathering switch button. It is accomplished hydraulically by the feather valve directing oil directly to the propeller. All other control functions are bypassed.

Normal Feathering

Feathering is normally accomplished by pulling the engine emergency shutdown handle. Pulling the handle mechanically positions the feathering valve and electrically energizes the feathering button solenoid. Also, current is furnished to the auxiliary pump, and to the feathering solenoid which hydraulically positions the feathering valve to feather the propeller. When the propeller has feathered fully, feathering oil pressure buildup operates a pressure cutout switch, causing the auxiliary pump and feathering solenoid to be deenergized. The feathering button light then goes out.

FEATHER PUMP PRESSURE CUTOUT OVERRIDE SWITCH.–A pushbutton type switch is located adjacent to each feather button. Actuating the override switch bypasses the feather pump pressure cutout switch, permitting continued operation of the feather pump in the event the feather pump operation terminates before the propeller blades reach the full feather position.

FEATHERING SWITCHES (BUTTONS).–Four guarded feathering switches (buttons), one for each engine, provide an alternate method for feathering the propellers. Pressing a button to FEATHER cuts off fuel electrically, energizes the feather solenoid, and energizes the feather pump motor to feather the propeller. The propeller is unfeathered when the button is pulled to unfeather. The center position is for normal propeller operation. A light in the feather button lights when the circuit to the feather pump is energized.

Automatic Feathering

The automatic feathering system performs its function by energizing the feathering button holding coil (pulling in the feathering button). This occurs when the autofeather arming switch is in ARMED and loss of engine power results in a large decrease in propeller thrust. This system is used during takeoff only, and functions above 60 (±2) degrees coordinator setting. Only one propeller will feather automatically.

AUTOFEATHER ARMING SWITCH.–An autofeather ARMED-OFF switch, located on the autofeather and rpm control portion of the pilot's overhead control panel, provides the control for the autofeather system. During normal operations, with the switch in the ARMED position, all power plants are protected by the autofeather system. With the switch in the ARMED position, the autofeather armed lights are illuminated and electrical power is supplied to the power lever quadrant autofeather arming switches. Both the arming switch and the power lever quadrant switch (activated at 60 degrees) must be closed before the thrust sensitive signal device can cause propeller autofeathering.

AUTOFEATHER-SYSTEM INDICATORS.–Four green indicator lamps, one for each propeller, illuminate to indicate that each individual propeller autofeathering circuit is armed. They are located on the pilot's overhead control panel. Also, should a propeller autofeather, its light will remain illuminated and the others will go out.

Unfeathering on the Ground

The propeller is unfeathered by holding the feathering button in the unfeather position. The airstart switch (in the propeller) limits the blade angle decrease to 45 degrees. For further decrease in blade angle, the pressure cutout override button must be held in.

PROPELLER CONTROL OPERATION

In illustrating typical propeller control operation, it will be assumed that the engines have been started and are operating in the taxi range (throttles between 0 degrees and 34 degrees). Each power lever controls propeller blade pitch and engine fuel flow through hydromechanical linkages. If a throttle is below 28 degrees and the blade pitch angle is above 10 degrees, the PITCHLOCK RESET VALVE SOLENOID (fig. 8-14) is activated, resetting pitchlock up to 109% rpm.

As the throttles are advanced above 34 degrees into the flight-idle range, propeller pitch is controlled by the flyweight propeller governor. This governor increases or decreases blade pitch to maintain 100% rpm by directing fluid through the feather valve. The temperature datum system controls proper engine temperature operation.

When the pilot is ready for takeoff he places the AUTOFEATHER SWITCH in the ARMED position. As the throttles are advanced beyond 75 degrees the NUMBER 3 POWER LEVER SWITCHES close to the HIGH POWER position. If a propeller's thrust drops below 500 pounds, the THRUST SENSITIVE SWITCH closes. This energizes the AUTOFEATHER RELAY. Power is routed through the AUTOFEATHER RELAY contacts to energize the FEATHER SWITCH PULL-IN AND HOLD-IN SOLENOID. The AUTOFEATHER RELAY loses its power from the FEATHER SWITCH, but the FEATHER SWITCH remains energized through a holding circuit. Power is routed from the energized FEATHER SWITCH through the contacts of the FEATHER CUTOUT RELAY to the FEATHER PUMP POWER RELAY, supplying 115V, 3-phase power to the FEATHER PUMP MOTOR. Power is also supplied to the FEATHER VALVE SOLENOID through the FEATHER CUTOUT RELAY. The FEATHER VALVE SOLENOID causes oil to be routed in such a way that the propeller begins to feather. The fail-safe-type FUEL CONTROL RELAY is also activated by power from the FEATHER SWITCH, causing the ENGINE FUEL SHUTOFF VALVE to close.

As the propeller feathers, the BETA CAM SWITCH closes when the blade angle goes past 74 degrees. The FEATHER MOTOR CUTOUT SWITCH closes when the propeller reaches full feather, and the oil pressure increases. This completes a circuit which causes the FEATHER CUTOUT RELAY to energize, deenergizing the FEATHER VALVE SOLENOID. Besides cutting out the FEATHER PUMP POWER RELAY, the energized FEATHER CUTOUT RELAY maintains its own holding circuit. This completes the autofeathering cycle. The FEATHER SWITCH will remain energized as long as the engine is feathered.

If the engine is shut down by pulling the EMERGENCY ENGINE SHUTDOWN HANDLE, power from the EMERGENCY ENGINE SHUTDOWN RELAYS (there are two switches and two relays for each engine's EMERGENCY SHUTDOWN HANDLE) is directed to the FEATHER SWITCH PULL-IN AND HOLD-IN SOLENOID. The engine is shut down and feathered as described above. Also, if the FEATHER SWITCH is pressed in, its own holding circuit is activated, causing the feather cycle operation to take place.

If the flight crew chooses to restart the engine during flight, the FEATHER SWITCH is pulled out to the UNFEATHER position and is held there. The FEATHER CUTOUT RELAY is deenergized, and power is provided to the FEATHER PUMP POWER RELAY. The FEATHER PUMP MOTOR pressure builds up and oil is directed to the decrease pitch side of the propeller dome, causing the propeller to start unfeathering (the FEATHER VALVE SOLENOID is not energized).

When the pitch of the blades decrease to less than 45 degrees, the BETA CAM AIR START SWITCH closes, completing the path for current through the AIRSTART CONTROL RELAY. With the AIRSTART CONTROL RELAY energized, a circuit is completed for the FEATHER VALVE SOLENOID. This causes the propeller blades to start back toward the feather position. The BETA CAM AIRSTART SWITCH opens, causing the AIRSTART CONTROL RELAY and FEATHER SOLENOID VALVE to open. This causes cycling of the blade pitch around the airstart blade angle (45 degrees), and causes the NTS INOP warning light to flash. The light blinks because of the blade pitch cycling action. This is an indication to the flight crew that the FUEL AND IGNITION SWITCH should be turned on for engine starting.

PRESSURIZATION AND AIR CONDITIONING

The air conditioning and pressurization systems of modern aircraft maintain the cabin and equipment at specific pressure and temperature levels during flight. The system supplies conditioned air for heating and cooling the cabin, crew spaces, and various electronic equipment.

The majority of air conditioning systems installed in modern aircraft utilize the air cycle system. Some aircraft utilize the vapor cycle system, which uses a liquid refrigerant similar to that used in a common household refrigerator. Operation of the air cycle and vapor cycle systems are discussed in *AE 3 & 2*, NAVEDTRA 10348 (Series).

A brief discussion of the cabin and equipment air conditioning and pressurization system installed in the A-6 aircraft is presented in the following paragraphs.

CABIN SYSTEM

The primary function of the cabin air conditioning and pressurization system is to maintain cockpit temperature and pressure within certain parameters for crew safety and comfort. To accomplish this, the system forces a mixture of dehumidified refrigerated air and hot engine bleed air through cockpit diffusers. The temperature of the mixture is automatically maintained through a continuously selective range by a temperature control system consisting of temperature sensors with associated flow control valves and an electronic controller. Cabin pressure is controlled by a pressure regulator and a safety valve, with a manual dump control associated with the safety valve. The block diagram for the airflow of the cabin air conditioning and pressurization system is shown in figure 8-15.

System Controls

The air conditioning control panel is shown in figure 8-16. Three switches and one control knob on the panel control the air conditioning operation.

The air conditioning master switch is a two-position, (NORM and OFF) toggle switch guarded to the NORM positon. Placing the switch to NORM opens the main bleed air shutoff valves, if the engine is providing air at 8 psi or more, and causes the air conditioning caution light to go off. Hot engine bleed air is now available for operation of the various environmental systems. Placing the switch in the OFF position closes the shutoff valve, thus shutting off the supply of hot engine bleed air to the environmental system. A spring-loaded guard over the air conditioning master switch prevents inadvertent operation of the switch to the OFF position.

The cockpit switch is a three-position toggle switch marked ON, OFF, and RAM AIR. With an engine running and the air conditioning master switch at NORM, placing the cockpit switch ON engages the air conditioning and pressurization system by energizing the dual temperature control valve and opening the cabin bleed air shutoff valve. Depending upon the setting on the automatic temperature control thumbwheel, conditioned air flows into the cockpit. Placing the cockpit switch OFF closes the cabin bleed air shutoff valve and drives the dual temperature control valve to the full hot position. This prevents any airflow to the cockpit. The RAM AIR position closes the cabin bleed air shutoff valve and drives the dual temperature control valve to the full hot position. Ram airflow is then controlled manually using the MAN/RAM AIR switch.

The MAN/RAM AIR switch is a four-position toggle switch marked AUTO, HOLD, COLD, and HOT. The AUTO position is selected to enable the dual temperature control valve to accept inputs from the automatic temperature control thumbwheel. Placing the switch to HOLD removes the dual temperature control valve from automatic control. The switch is spring-loaded to HOLD when AUTO is not selected. Momentarily holding the switch in COLD or HOT alters the positions of the hot

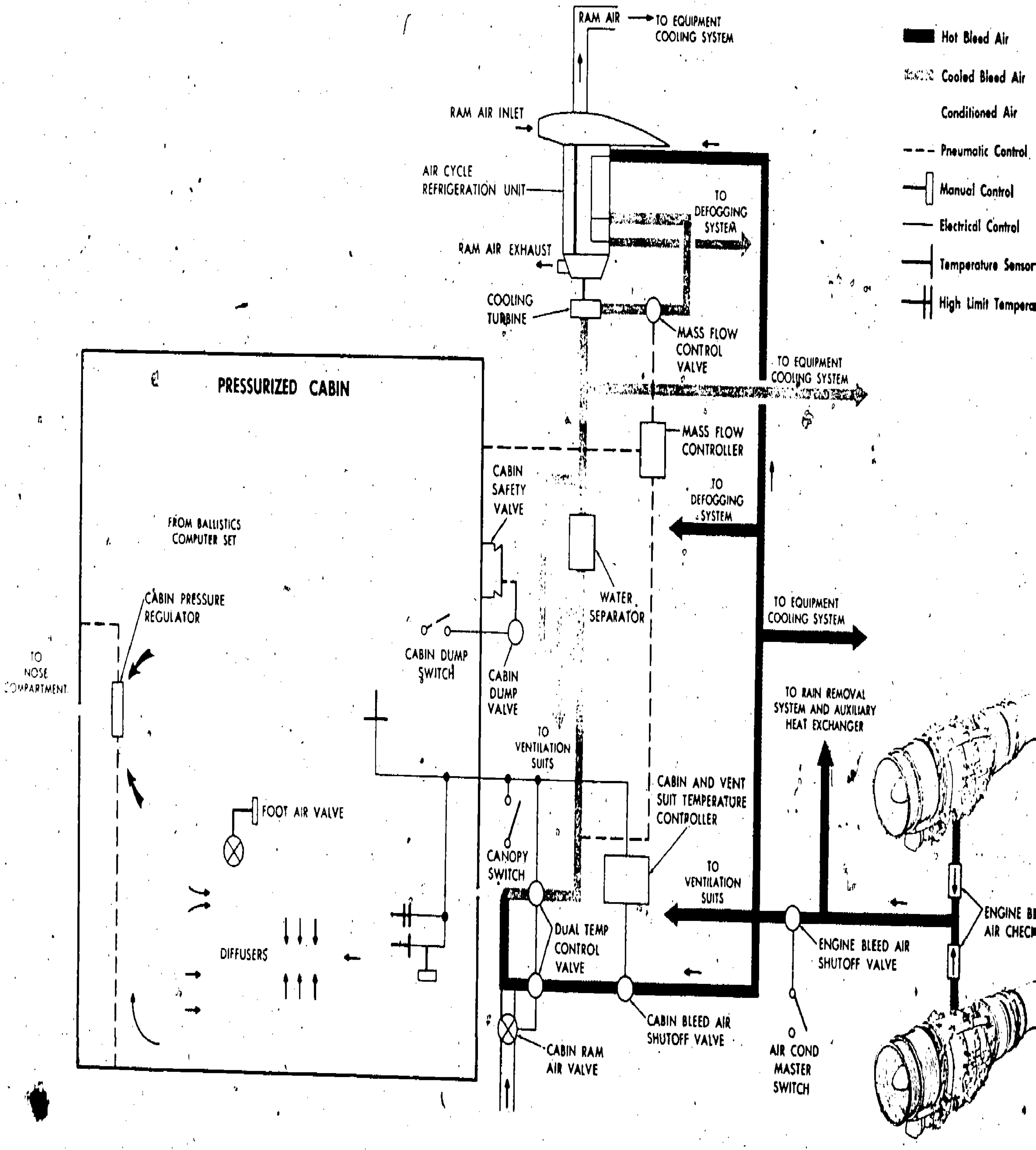

Figure 8-15.—Cabin air conditioning and pressurization diagram.

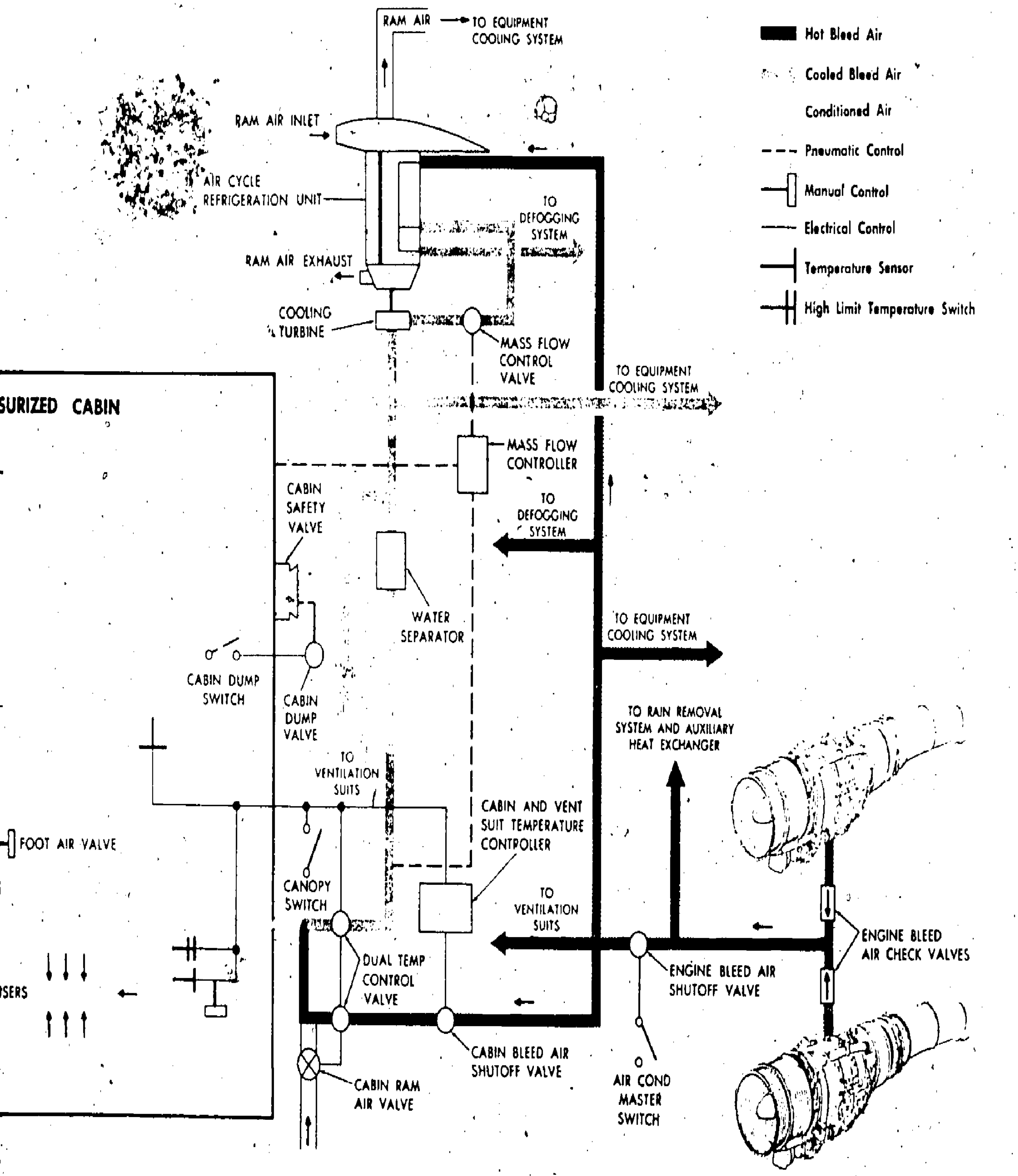

208.215

Figure 8-15.—Cabin air conditioning and pressurization diagram.

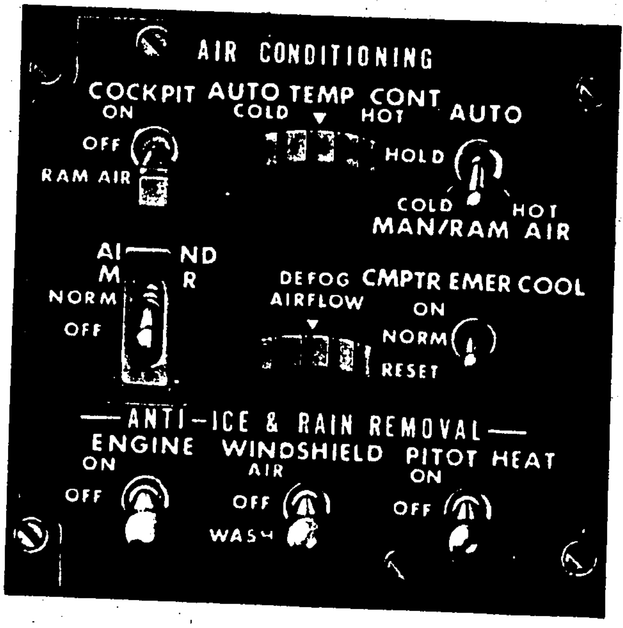

208.287

Figure 8-16.—Air conditioning control panel.

and cold sides of the dual temperature control valve to change the cockpit air temperature. When released, the switch springs back to HOLD and the dual temperature control valve remains fixed. The COLD and HOT positions should be toggled intermittently to avoid overshooting the desired temperature. With RAM AIR selected on the air conditioning cockpit switch, airflow is controlled manually by the ram air switch which opens and closes the ram air valve.

The automatic temperature control thumbwheel enables the crew to adjust the cockpit air temperature. With the air conditioning controls appropriately positioned, the thumbwheel may be moved to any setting between 0 and 14. Rotating the thumbwheel automatically regulates the openings of the hot and cold sides of the dual temperature control valve, thus varying the cockpit air temperature. The temperature may be selected within a range of 60° to 80°F.

System Operation

When the cockpit switch (fig. 8-17) is placed in the ON position, contact 3 removes power from the cabin bleed air shutoff valve which opens, allowing hot air to flow to the dual temperature control valve. Simultaneously, a second portion of the cockpit switch, which is ganged to the first, connects the center tap of the MAN/RAM AIR switch through energized contact 3 of the air conditioning control relay through the COLD side of the cabin duct thermal switch, through contact 4 of the COCKPIT SWITCH, to the control phase of the dual temperature control valve. Contact 1 of the cockpit switch supplies power to the coil of the air conditioning control relay when the cockpit switch is in either the ON or OFF position. Contact 2 of the cockpit switch (in either the ON or OFF position) supplies 120 volts to the close winding of the cabin ram air valve. A phase shifting capacitor supplies power to the open winding of the same valve, which drives the two-phase induction motor to the full close position.

In the air conditioning mode (cockpit switch ON), hot engine bleed air flows through the cabin shutoff valve to the dual temperature control valve where it is mixed with refrigerated, dehumidified air. The cabin temperature control system automatically maintains the cabin at a selected temperature by continuously modulating the dual temperature control valve. The modulating signals are cabin temperature errors that are translated into error voltages by the cabin temperature sensor. These signals are modulated and amplified by the cabin and ventilation suit temperature controller, and transmitted to the control winding of the dual temperature control valve; the hot side of the valve starts to close and the cold side opens until the selected cabin temperature is achieved. In order to prevent temperature hunting by the cabin temperature sensor, the cabin duct dual temperature sensor anticipates changes in cabin temperature by sensing changes in the duct inlet temperature.

The dual temperature sensor transmits error signals to the cabin and ventilation suit temperature controller whenever the temperature of the cabin air supply changes. The magnitude of the transmitted signals depends upon the rate of temperature change. When the cabin duct inlet temperature exceeds 121.1°C (250°F), the over-temperature sensor portion of

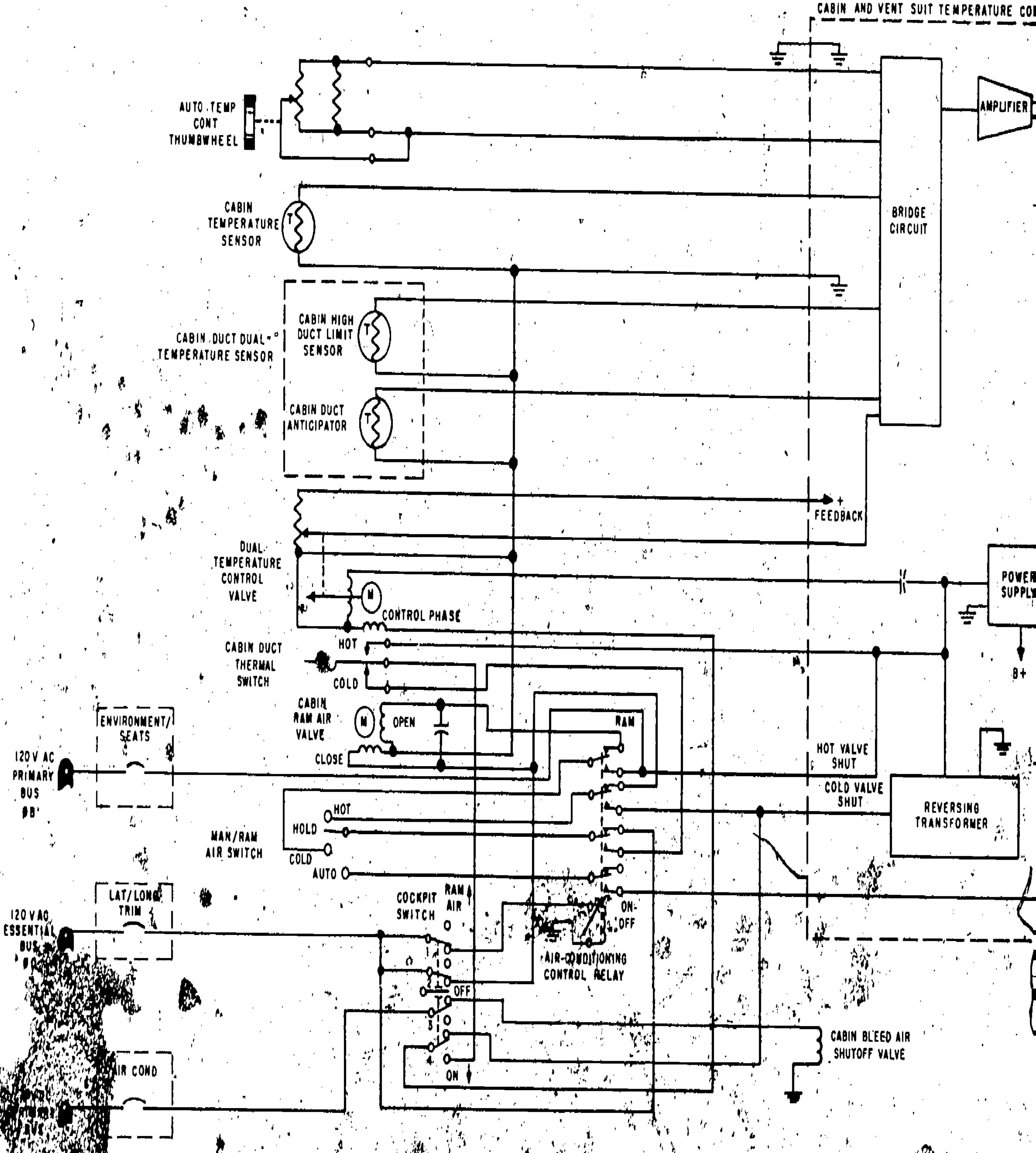

Figure 8-17.—Cabin air conditioning and pressurization schematic diagram.

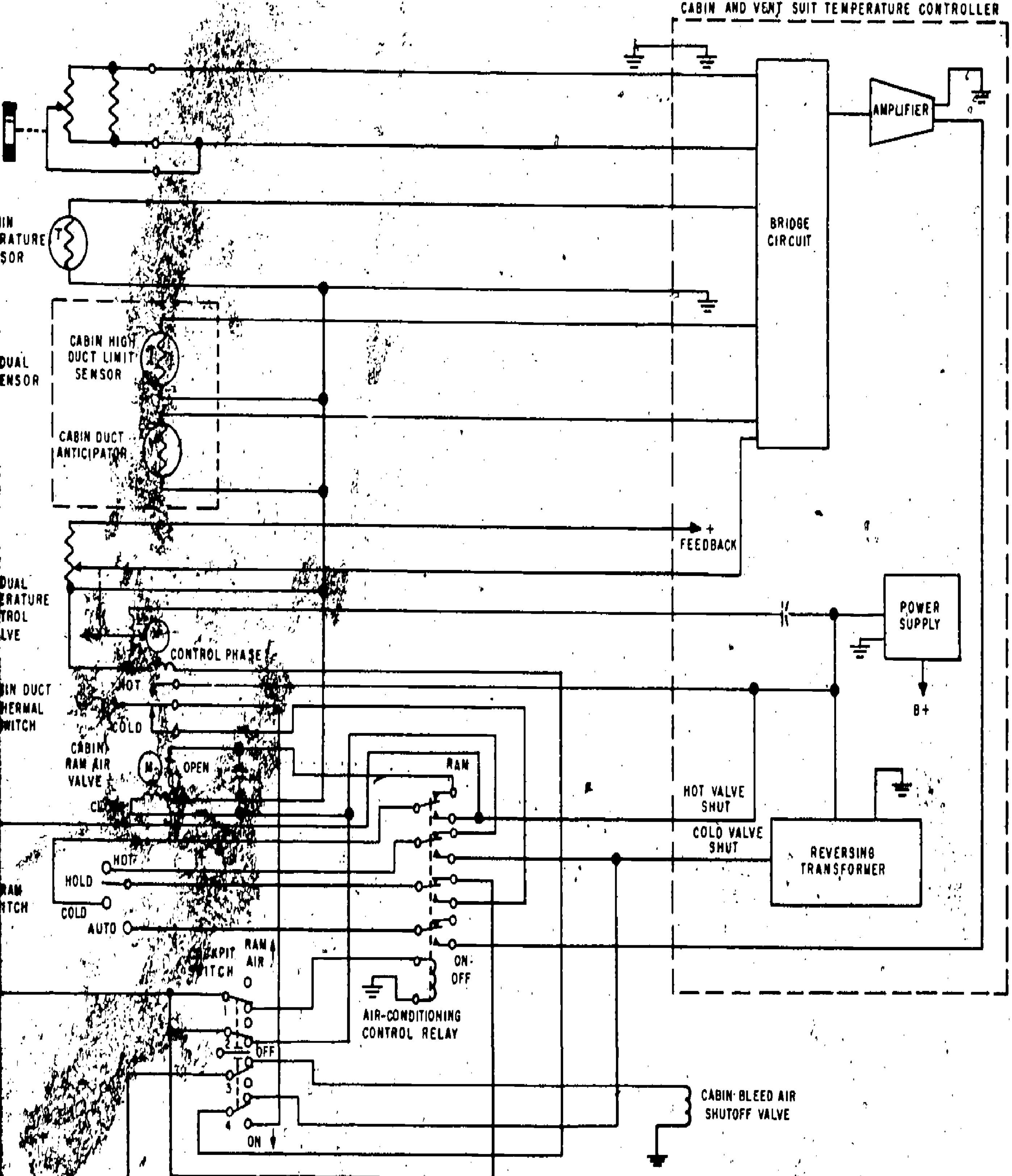

208.216

ure 8-17.—Cabin air conditioning and pressurization schematic diagram.

this sensor transmits a fixed signal through the temperature controller to the control winding of the dual temperature control valve. The valve is driven to the full cold position until duct temperature returns to normal, then automatic control is resumed.

An additional override to the cabin temperature sensor is provided by the cabin duct thermal switch. This temperature-sensitive switch closes when the duct inlet temperature exceeds 121.1°C, or the dual temperature sensor malfunctions. During these conditions, 120 volts ac is supplied from the ENVIRONMENT/SEATS CB (fig. 8-17) through the HOT side of the cabin duct thermal switch, through contact 4 of the cockpit switch, to the control winding of the dual temperature control valve. The valve is driven to the full cold position. When the cabin duct inlet temperature is reduced to 121.1°C the switch goes to the cold position and automatic temperature control is again resumed.

In the automatic mode, cockpit temperature is selected by positioning the AUTO TEMP CONT thumbwheel. This fixes the output voltage of the bridge circuit in the cabin and ventilation suit controller. The signal is amplified in the controller and transmitted through contact 4 of the air conditioning relay to the AUTO position of the MAN/RAM AIR switch. The signal travels back through contact 3 of the air conditioning relay to the COLD side of the cabin duct thermal switch, then through the cockpit switch to the control winding of the dual temperature control valve.

Manual control of the cabin air conditioning system is acquired by momentarily positioning the MAN/RAM AIR switch at COLD or HOT. In the COLD position, power is supplied from the ENVIRONMENT/SEATS CB through contact 1 of the air conditioning control relay, through the MAN/RAM AIR switch, through contact 3 of the air conditioning control relay, through the COLD contacts of the cabin duct thermal switch, and through contact 4 of the cockpit switch to the control winding of the dual temperature control valve. This voltage lags the fixed phase voltage by 90° and drives the two-phase induction motor so that more refrigerated air and less hot air is allowed to enter the cabin. The valve will continue to move until the switch is released, after which the switch returns to HOLD and the valve remains fixed.

When the MAN/RAM AIR switch is toggled to the HOT position, power is taken from the ENVIRONMENT/SEATS CB through the reversing transformer, through contact 2 of the air conditioning control relay, through the MAN/RAM AIR switch, through contact 3 on the air conditioning control relay, through the COLD contacts on the cabin duct thermal switch, and through contact 4 of the cockpit switch to the control winding of the dual temperature control valve. Because the voltage is routed through the reversing transformer it is shifted 180° and the control winding voltage leads the fixed-phase voltage by 90°. This causes the valve to drive in a direction so as to decrease cold air and increase hot air to the cockpit. When the switch is released, the valve remains fixed.

Under any of the previously described conditions—in either the automatic or manual mode—failure of electrical power to the cabin and ventilation suit temperature controller, or to the dual temperature control valve, will cause the valve to remain in the position it was maintaining at the time of electrical failure.

The cabin may be ram air ventilated by placing the cockpit switch at RAM AIR. With the canopy closed, this action deenergizes the air conditioning control relay, closes the cabin bleed air shutoff valve, and drives the dual temperature control valve to the full hot position. This effectively blocks the flow of both hot and cold bleed air to the cabin. Either crewmember may control the degree of ram air ventilation by depressing the MAN/RAM AIR switch to either HOT OR COLD. The HOT position drives the cabin ram air valve toward the closed position, restricting the ram air flow, and the COLD position drives the cabin ram air valve toward the open position, increasing the ram air flow. Any position of the cabin ram air valve from full open to full closed may be selected.

Cabin pressurization is automatically initiated at 8,000 feet; the cabin pressure is maintained at 8,000 feet until a pressure differential of 5 psi is reached. Thereafter, the pressure differential is maintained at 5 psi.

The pressure schedule is maintained by the cabin pressure regulator. This valve allows the air passed into the cabin air conditioning system to exhaust into the nose compartment. From sea level to 8,000 feet, the exhaust flow is unrestricted. Above 8,000 feet, the valve closes down, restricting the exhaust flow until a cabin pressure equivalent to 8,000 feet altitude is maintained. The cabin remains at this pressure as the aircraft climbs until a cabin-to-ambient pressure differential of 5 psi is reached. Beyond this altitude, the valve regulates the exhaust flow to maintain this constant pressure differential throughout the remaining altitude range.

A cabin pressure safety valve is provided to limit cabin pressure in the event of regulator malfunction. This valve limits the cabin-to-ambient pressure differential to 5.5 psi. The CABIN DUMP switch permits either crewmember to dump cabin pressure through the cabin safety valve. Placing the CABIN DUMP switch at ON completes a circuit to the solenoid on the cabin dump valve which opens the cabin safety valve.

EQUIPMENT COOLING SYSTEM

Ram air is the primary means of ventilation for the forward and aft equipment compartments. Ventilation of these compartments is controlled by the ram air thermal switch, the equipment cooling valve, the forward compartment ram air valve, and the aft compartment ram air valve.

When the aircraft is in flight, the equipment cooling valve is closed and the forward and aft compartment ram air valves are open. Under these conditions, the right forward and aft equipment compartments are ram air ventilated. When the temperature in the right wing ram air duct reaches 46.1°C (115°F), the equipment cooling valve opens and the forward and aft compartment ram air valves close. This permits moist, cooled bleed air to flow into the right forward and aft equipment compartments and ensures adequate cooling when ambient air temperatures are excessive.

The equipment cooling system flow diagram is shown in figure 8-18.

System Operation

With an engine running, the equipment cooling system is automatically engaged when the AIR COND MASTER switch is placed at NORM. (See fig. 8-19.) Under these conditions, the circuit from the 28-volt dc essential bus through the AIR COND circuit breaker to the solenoid of the engine bleed air shutoff valve is complete, and bleed air flows to the air cycle refrigeration unit. The discharge from the cooling turbine supplies the cooled bleed air used by the equipment cooling system.

When the aircraft is airborne and the ram air temperature is below 46.1°C (115°F), voltage from the 120-volt primary bus is fed through the EQUIP COOL circuit breaker, the overpressurization relay, and the unoperated ram air thermal switch to the equipment cooling valve, the forward compartment ram air valve, and the aft compartment ram air valve. The equipment cooling valve is operated to the fully closed position and the forward compartment and aft compartment ram air valves are operated to the fully open position. Ram air flows to the right forward and aft equipment compartments and the cooled bleed airflow is shut off.

When the ram air temperature exceeds 46.1°C, the ram air temperature thermal switch operates. Voltage from the 120-volt primary bus is fed through the EQUIP COOL circuit breaker, the overpressurization relay, and the operated ram air thermal switch to the equipment cooling valve, the forward compartment ram air valve, and the aft compartment ram air valve. The equipment cooling valve is operated to the fully open position and the forward compartment and aft compartment ram air valves are operated to the fully closed position. Undried, cooled bleed air flows to the forward and aft equipment compartments and the ram air to these compartments is shut off.

When an overpressurization condition occurs the pressure switch operates, closing the overpressurization relay. Voltage from the 120-volt primary bus is fed through the EQUIP COOL circuit breaker and the overpressurization relay to the equipment cooling valve, the forward compartment ram air valve, and the aft compartment ram air valve. The equipment cooling valve is operated to the fully open

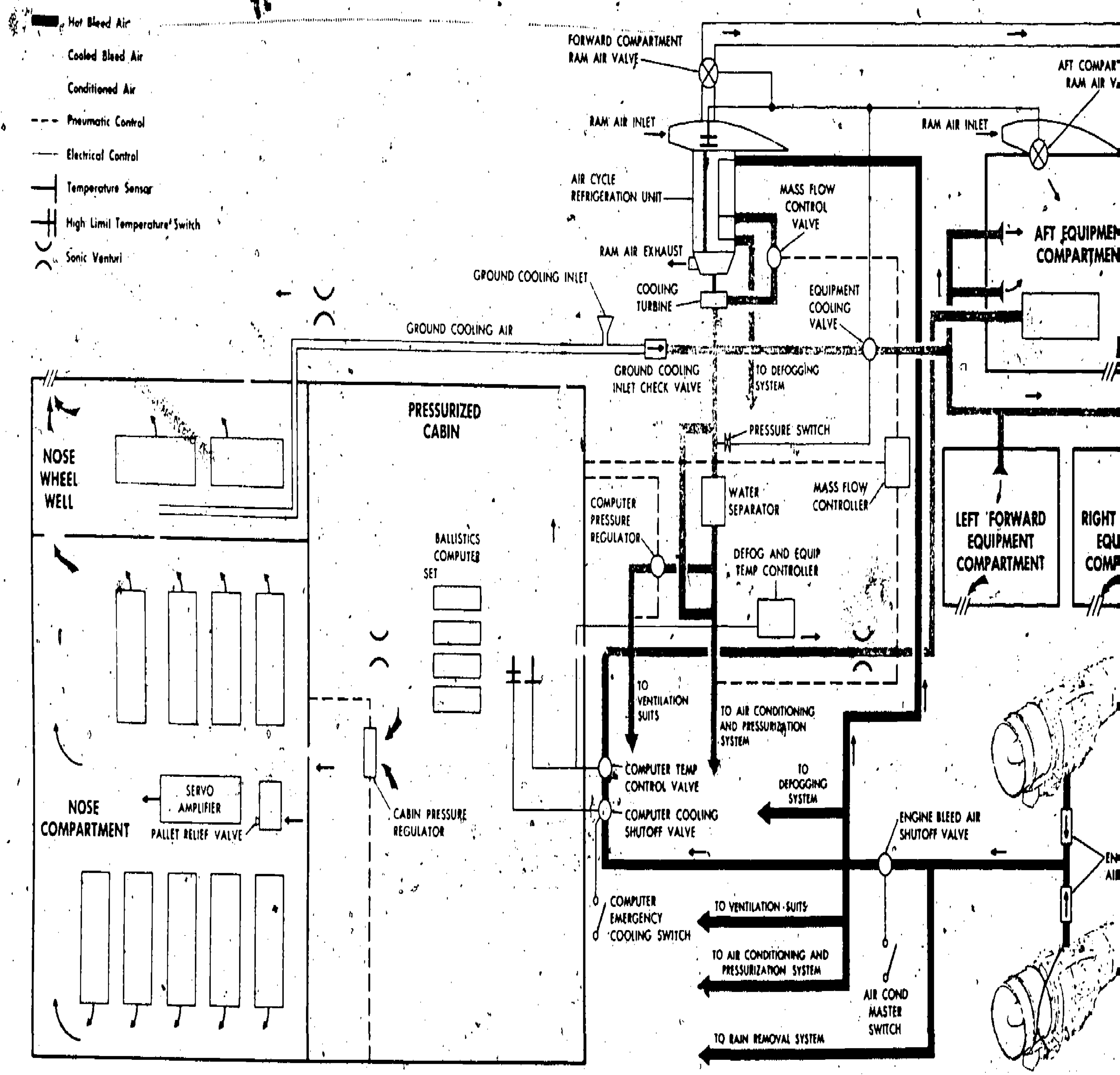

Figure 8-18.—Equipment cooling flow diagram.

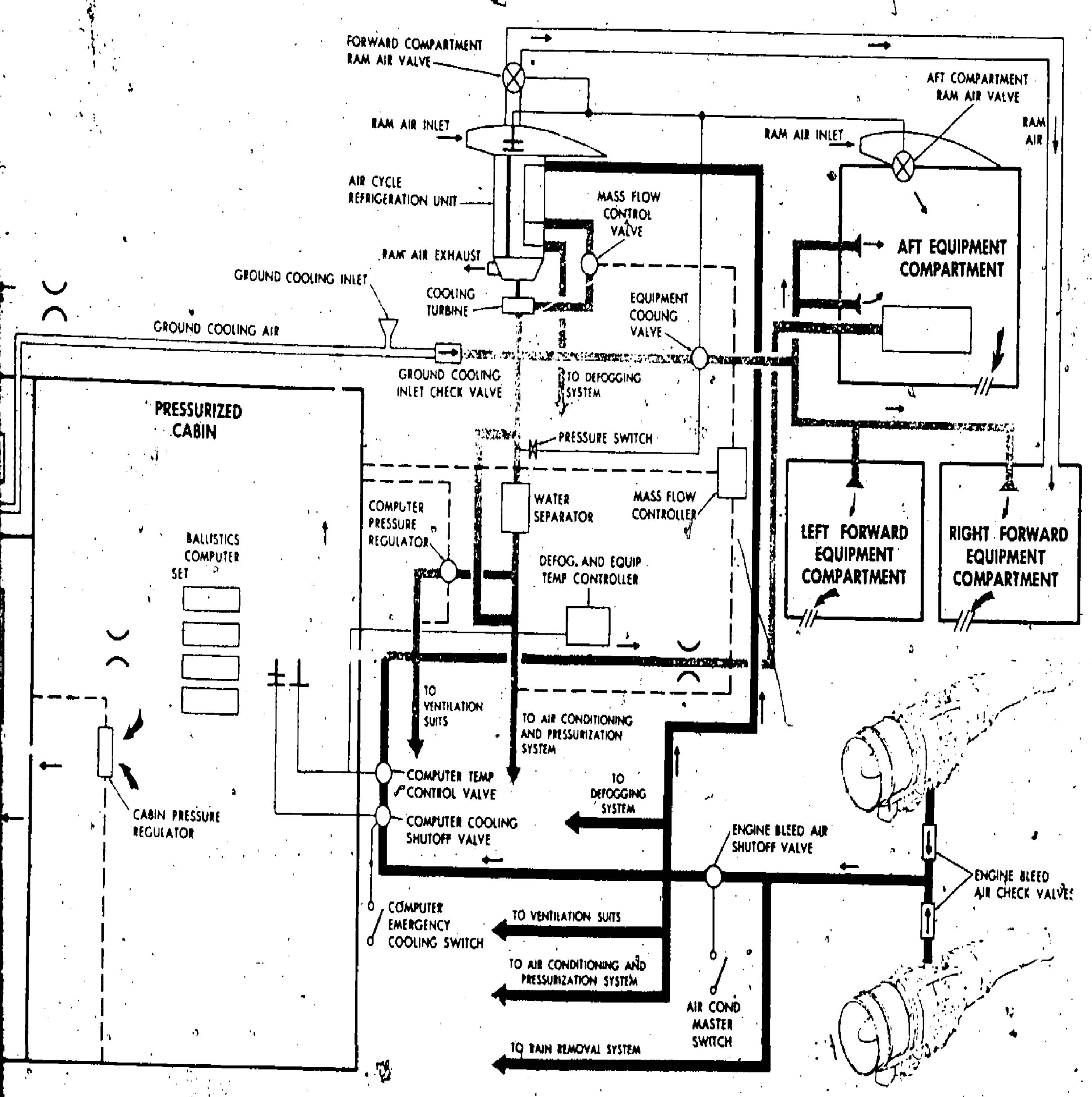

208.217

Figure 8-18.—Equipment cooling flow diagram.

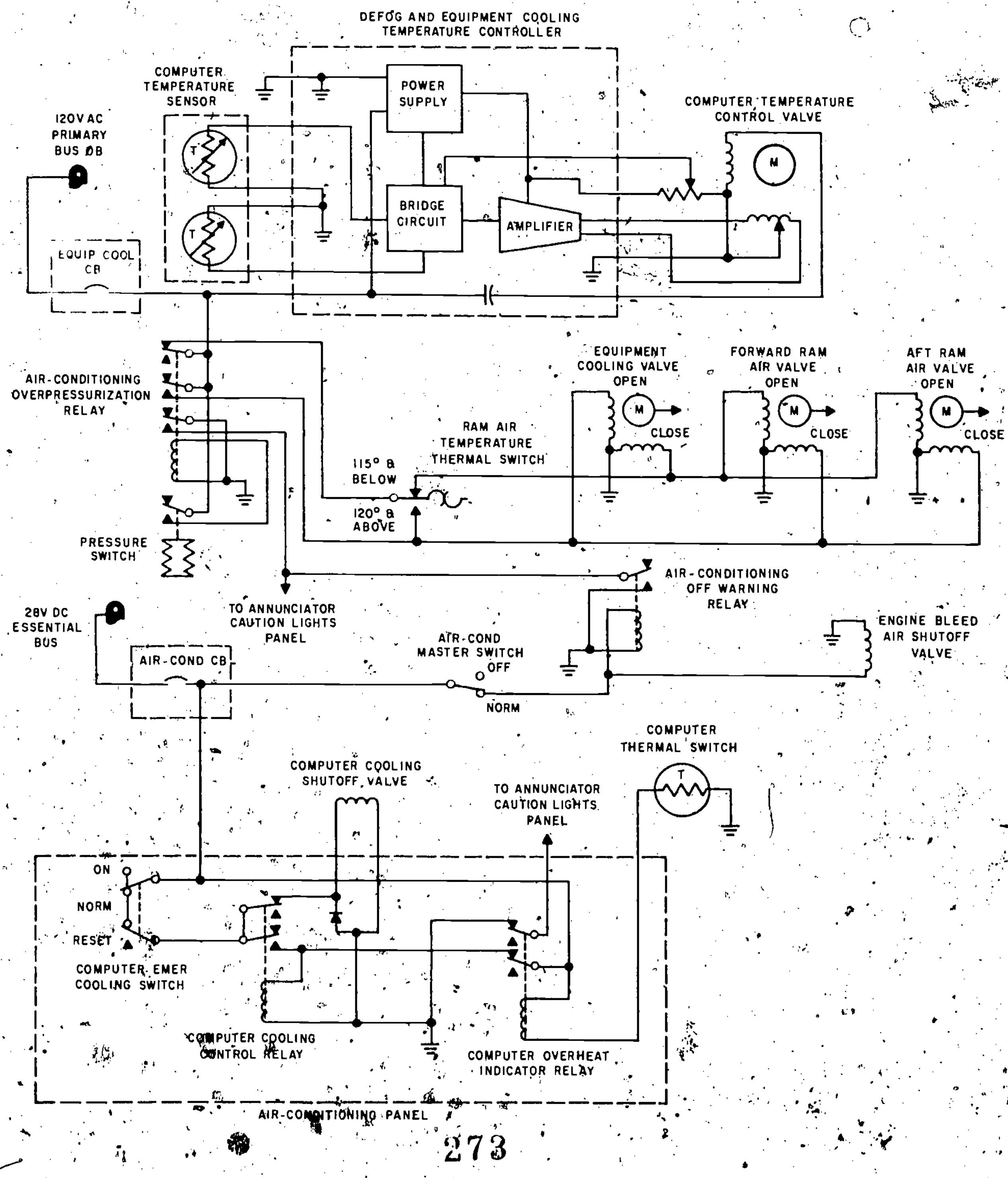

273

208.218

Figure 8-19.—Equipment cooling schematic diagram.

position and the forward and aft compartment ram air valves are operated to the fully closed position. Under these conditions, the overpressure is dumped into the forward and aft equipment compartments.

The computer pressure regulator maintains a pressure of 2 to 3 psi in the equipment cooling line. The pressure regulated, partially-dried cooled bleed air from the regulator is automatically mixed with controlled quantities of hot bleed air by the servocontrolled computer temperature control valve. This valve modulates in response to temperature signals sensed in the computer inlet duct by the computer temperature sensor, to maintain a fixed computer duct temperature of 4.4° ± 2.8°C (40° ±5°F). The temperature controlled air flows through the Ballistics Computer Set. Sonic venturis located in the ballistics computer outlet duct and the transmitter modulator inlet duct limit the flow of cooling air.

A safety override for the computer temperature control valve is provided by including the computer cooling shutoff valve upstream of the computer temperature control valve. If the computer duct temperature exceeds 65.6°C (150°F), the computer thermal switch opens, deenergizing the computer overheat indicator relay and completing the circuit to the COMPUTER OVERHEAT caution light. Voltage from the 28-volt essential dc bus is fed through the AIR COND circuit breaker and the computer overheat indicator relay. This is done to energize the computer cooling control relay, thereby closing the computer cooling shutoff valve. If the computer duct temperature drops below 65.6°C the contacts of the computer thermal switch close, energizing the computer overheat indicator relay and interrupting the circuit to the COMPUTER OVERHEAT caution light. The computer cooling control relay remains energized through the computer emergency cooling switch and its own contacts. When the CMPTR EMER COOL switch is momentarily placed to RESET, the computer cooling control relay becomes deenergized, completing the circuit to open the computer cooling shutoff valve. If the COMPUTER OVERHEAT caution light should cycle on and off indicating a constant overheat condition, the computer cooling shutoff valve can be permanently closed by placing the CMPTR EMER COOL switch to ON. This allows uncontrolled, cooled bleed air to be ducted to the Ballistics Computer.

Air exhausted from Ballistics Computer Set and from the cockpit is circulated through the less critical electronic equipment compartments. The direct cooling requirements of the CNI equipment in the aft equipment compartment are supplied by dehumidified, pressure-regulated air tapped downstream of the computer pressure regulator.

CABIN AND VENT SUIT TEMPERATURE CONTROL SYSTEM

The cabin and vent suit temperature controller is a transistorized electronic device that operates on 120 v, 400 Hz. Maximum power consumption is 28 watts.

Electrically, the controller consists of two channels—the cabin temperature channel and the ventilated suit channel. Both channels operate in basically the same manner. Bridge circuits compare temperature selector and temperature sensor resistances, which are representative of selected and actual temperature conditions, and generate a resultant dc error voltage. The dc error voltage is then modulated and amplified. The resulting ac signal is the output of the controller and has phase and voltage characteristics proportional to the magnitude of the dc error signal. It is fed to the 2-phase servomotor of the appropriate control valve to continuously modulate the valve to maintain the selected temperature.

The cabin temperature channel of the temperature controller utilizes three bridge circuits to maintain cabin temperature. (See fig. 8-20.) Selection of the desired temperature with the cabin temperature selector varies resistance of one leg of the cabin temperature bridge. The varying cabin temperature varies the resistance of the cabin sensor in the second leg of the bridge circuit. Thus, a selected temperature must be accompanied by a change of cabin temperature to provide bridge balance between the cabin sensor and selector. Whenever bridge

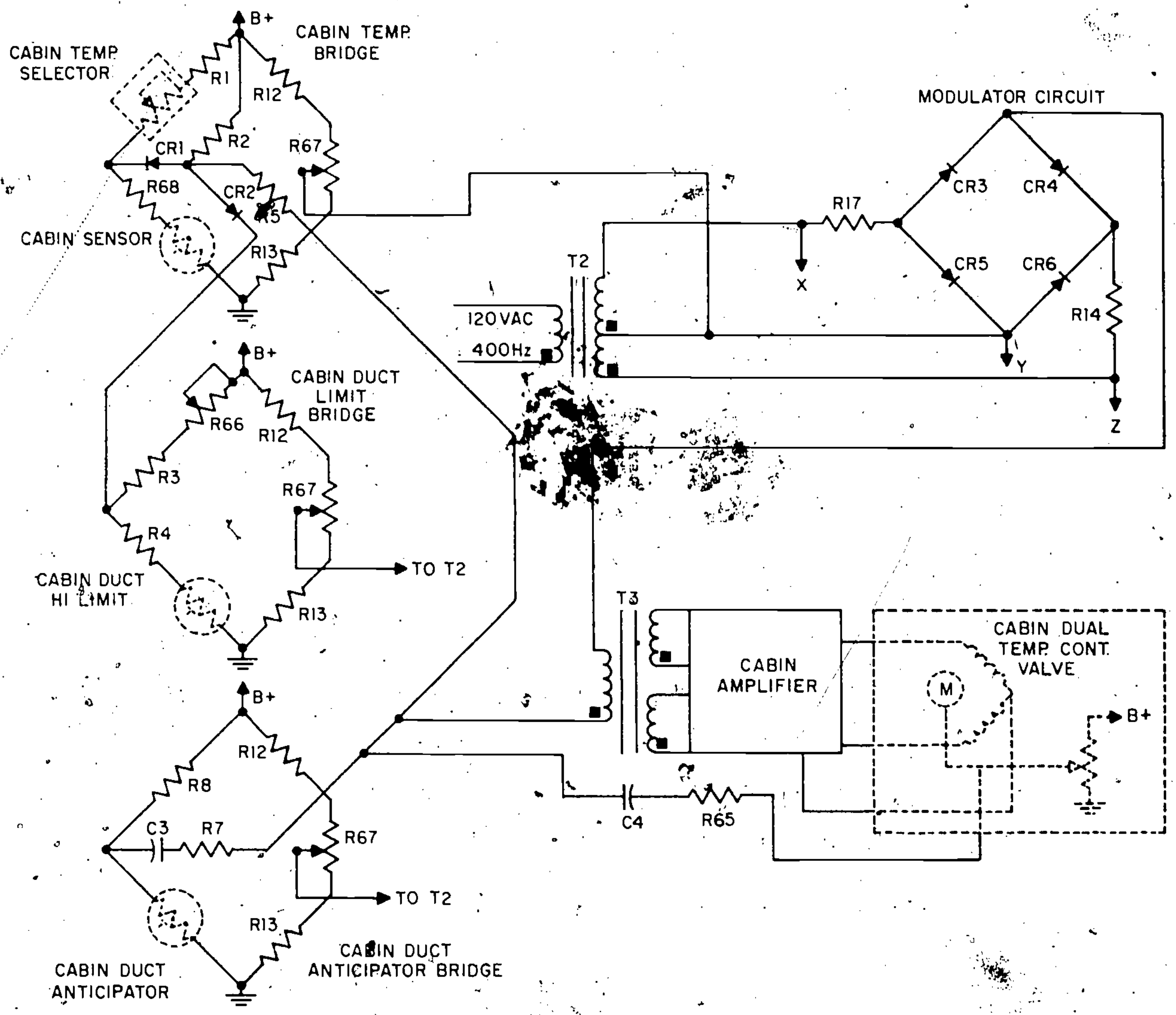

208.213

Figure 8-20.—Cabin temperature channel.

imbalance exists, the resulting dc voltage is ac modulated by the modulator circuit, amplified by the cabin amplifier, and fed to the control valve servomotor to either increase or decrease cabin temperature.

The function of the cabin duct limit bridge is to limit the temperature of the cabin inlet air. A diode biasing network permits the cabin duct limit bridge to override the cabin temperature bridge when the duct temperature limit is attained. The resulting dc voltage is fed to the modulator circuit, to the cabin amplifier, and to the control valve servomotor to decrease cabin temperature.

The cabin duct anticipator bridge functions with sudden changes of air temperature in the cabin air inlet duct. This is accomplished by capacitor-coupling the error voltage to the modulator. When the cabin temperature is being held at the selected temperature with constant cabin inlet air temperatures, the anticipator

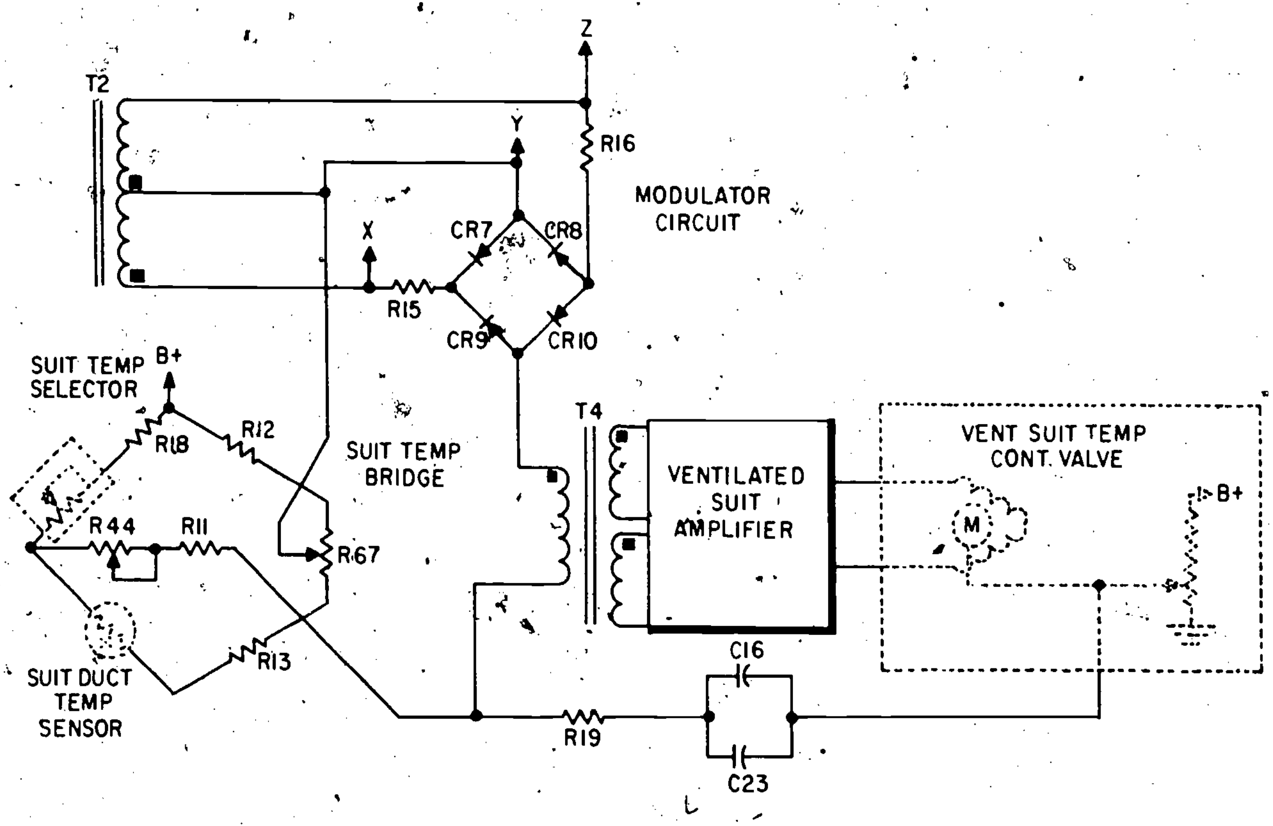

208.214

Figure 8-21.—Vent suit channel.

bridge is in balance. Should duct temperature suddenly increase or decrease with all other conditions remaining the same, the anticipator bridge is unbalanced and an error voltage is supplied to the modulator circuit. The resulting amplified signal regulates the cabin control valve to return the duct air to its original temperature. Error voltages caused by imbalance of the cabin temperature or cabin duct limit bridges override the cabin duct anticipator bridge, provided the duct air temperature error is gradual or small.

One additional error voltage is capacitor-coupled to the modulator circuit—the voltage change that is proportionate to the rate of change of the feedback potentiometer of the cabin dual temperature control valve. This voltage change is applicable only when the valve is being regulated (the feedback potentiometer is rotating). Therefore, the error feedback voltage seen at the input of the control is proportionate to the rate of change of the feedback potentiometer. Once regulation of the valve has started, the rate-of-change voltage from the potentiometer reduces the initial starting voltage to the control valve actuator motor, thus slowing valve actuator rotation.

The ventilated suit channel of the temperature controller utilizes but one bridge circuit to maintain suit temperature. (See fig. 8-21.) Operation of this bridge is similar to that of the cabin temperature bridge. The suit temperature selector resistance in one leg is balanced against the suit duct temperature sensor resistance in the opposite leg. Imbalance between these legs of the suit temperature bridge results in a dc error voltage, which is ac modulated by the modulator circuit, amplified, and applied to the suit temperature control valve to alter suit air temperatures.

Rate-of-change voltage from the feedback potentiometer in the ventilated suit temperature control valve is capacitance-coupled to the modulator circuit. As in the cabin temperature channel, this voltage is present only when the valve is being actuated. It reduces the intial starting voltage to the valve once actuator rotation has started, thus slowing actuator rotation.

CHAPTER 9

MAINTENANCE TECHNIQUES

The supervision of maintenance on electrical/instrument equipment is a major responsibility of senior AE's. The job of supervision is a many-sided task. Some of the techniques will have been learned through past experience. Others will have to be learned during actual supervision of maintenance. Still other techniques may be learned from self study courses and technical publications.

Three general objectives of shop supervision are listed below and discussed in the following paragraphs. The supervisor may be able to add to this list after a detailed study of his own specific duties and responsibilities. The objectives are:

1. To operate with maximum efficiency and safety.
2. To operate with minimum expense and waste.
3. To operate free from interruption and difficulty.

Operating with maximum efficiency and safety is dependent to a large extent upon how conveniently the workspaces and equipment are arranged in the shop. Making a drastic rearrangement to improve the utilization of a single piece of equipment may not be economically feasible. However, a drastic change which results in improved utilization of several equipments may be worthwhile. The new shop supervisor will want to make an evaluation of the existing shop layout to assure himself that he has the most efficient arrangement possible.

A supervisor should know his men's limitations and capabilities. He should use the capabilities of his best men in a twofold manner. Whenever possible he should assign a well qualified man to do a certain job and add to the team other individuals who are less qualified but who are professionally ready for advanced on-the-job training.

The supervisor must anticipate the eventual loss of his most experienced workers through transfers, discharges, etc., and offset this by establishment of an effective and continuing training program. In addition to raising the skill level of his division, the training program will ensure that qualified personnel will be ready for advancement examinations.

A shop safety program must be organized and administered. Current Navy directives and local policies are quite specific as to the establishment of safety training programs.

Keeping accurate and complete records is another factor in the efficient operation of a shop. This includes records of usage data, work accomplishment, and personnel progress. The most efficient recordkeeper is one who has enough records without having his files bulging with useless and outdated material.

A knowledge of the principles of man-hour accounting is necessary in the efficient utilization of the manpower available. The supervisor should schedule his workload in such a way that planned absences of key workers will not unduly interrupt the daily routine. When scheduling the workload, he should keep in mind the skill level required for the various tasks, and assign individuals to jobs in such a way that the work may still progress if any worker is unexpectedly absent.

Operating with minimum expense and waste is our second objective. The shop supervisor has responsibility for ordering and accounting for aircraft spare parts and material. He must impress upon his men the need for being thrifty in the use of these materials. There are many ways to economize, and the supervisor and his senior petty officers should always be on the alert for opportunities to point out these ways to the less experienced individuals.

Meeting the third objective depends largely upon the availability and condition of tools, test equipment, and maintenance publications. A smoothly functioning shop will have all its equipment in good working order. Tools will be in good condition, of the proper type, and in sufficient quantity for the number of men assigned. The maintenance publication file will be complete with the latest publications covering all equipment and systems the shop is responsible for maintaining.

The shop functions may be further smoothed by the ~~judicious~~ delegation of authority to individuals next in seniority to the supervisor. Delegation of authority does not relieve the supervisor of the final responsibility for work accomplishment. It is primarily a means of relieving the supervisor of details. A supervisor who allows himself to become too involved with details loses his effectiveness as a supervisor.

ORGANIZATION OF MAINTENANCE AND REPAIR FACILITIES

As previously stated, the job of a supervisor is a many-sided one. It has a particular importance with respect to the operation of a maintenance and repair facility. The supervisor should fully understand and appreciate the responsibility he holds as a member of the organization. He must be able to identify each of his duties with respect to the mission of the organization, not an easy task in a field as complex and variable as the work of a supervisor.

SHOP LAYOUT

The supervisor's first assignment in shop layout may be either the initial planning for a new repair facility or the modernization and improvement of an existing facility. In either case the supervisor's goal is to utilize space as efficiently as possible.

The following paragraphs discuss some of the areas to be considered when planning shop layout. They are not to be considered as an exhaustive listing of all the problems that will be encountered, or as the only solutions to the problems. They are, however, a representative listing of some of the basic areas to be considered.

Purpose of the Shop

One basic consideration in planning a shop layout is the purpose of the shop. When more than one space is available, the supervisor must decide which shops will occupy the spaces and, if necessary, which will have to share spaces. Of two available areas, for example, one may be unacceptable as an electrical shop if the shape of one of the areas precludes the placement of large items of test equipment. This space, however, may be ideal for the instrument shop.

Where one shop is readily accessible on the hangar deck level, and access to another involves climbing a ladder or traveling a considerable distance, the relative size and weight of components would be an important point to consider.

Another factor to consider is the close proximity of rotating or switching devices that might cause interference. This would be more objectionable in its effects on some equipment than on others.

Security of classified matter may be a consideration in determining the usage of the particular spaces. If the amount of classified equipment is such that a separate shop can be efficiently utilized for it, the problem of control of classified publications and material will be greatly reduced.

Bench Arrangement

Following the determination of which shops are to occupy what spaces (or areas within a space), the next problem is the arrangement of test benches and test sets within the shop. Proper placement of test benches and test sets can do much to increase the efficiency of the shop.

The supervisor's first step in planning the arrangement of test benches should be to fully familiarize himself with the power distribution system. Placement and grouping of the particular test sets and equipments can be accomplished only within the limits imposed by the power distribution system. In planning for new installations, the supervisor should utilize the *Design Guide for Avionics Shop Power Distribution*, NAVAIR 01-1A-512.

Some test benches and their related equipments have extremely high usage or great inherent danger potential. Placing these away from heavy traffic areas near entrances, offices, or tool issue rooms would be advisable.

Sufficient workspace should be allotted adjacent to the test benches for portable test equipment, tools, and for the use of technical publications.

Permanently mounted test equipment and electrical/instrument equipment components (controls, dynamotors, etc.) should be mounted so as to be accessible in a safe and efficient manner.

In an area designated for the disassembly and repair of miniature components, consideration should be given to the installation of special lighting.

Another consideration in placing particular test benches is their relationship, desirable or undesirable, to certain permanently installed items. The location of air outlets, electrical equipment cleaning facilities, machines, or devices that might cause interference, are some of the items to be considered.

If a separate shop is not utilized for classified equipments, then placement of these equipments in a section of the shop where the physical layout lends itself to limiting or controlling access is desirable.

Shop Housekeeping

A clean orderly shop reflects good supervision. The supervisor has the responsibility for originating and publishing cleaning bills and schedules. In setting up the shop job assignments and work schedules, the supervisor must allot time for scheduled cleaning. The availability of sufficient cleaning gear to accomplish the scheduled cleaning is also the responsibility of the supervisor.

Providing proper and adequate stowage space for tools, test equipment, publications, and other materials when not in use can do much to aid in keeping an orderly shop.

In shop housekeeping, as well as other fields of responsibility, the constant search for problems and the timely solution thereof are prime functions of a good supervisor.

CARE OF TOOLS AND TEST EQUIPMENT

Maintenance of electrical/instrument equipment requires a large amount of expensive and delicate test equipment, special tools, and common handtools. Availability of tools and test equipment, in good condition and proper working order, can do much to help meet the work schedule and add to the quality of the work. *Tools and Their Uses*, NAVPERS 10085-B, contains information on the proper care and use of many tools, as well as information on basic skills in using handtools. The instruction manuals supplied with each test equipment contain sections devoted to the proper care of, and proper operating procedures for, that specific equipment, and usually for test equipment in general. By utilizing these sources of information, the supervisor can emphasize proper use and care of tools and equipment. This emphasis can be achieved in both safety and technical lectures, but the most effective method is by making proper usage and procedures an inherent part of on-the-job training, job instructions and explanation, and day-to-day supervision.

Applicable allowance lists specify the type and quantity of tools and test equipment a shop is allowed. The allowance lists should be cross-checked with a current inventory, and any deficiencies made up as soon as possible.

Both organizational and intermediate level maintenance activities are on a tool control program which is based on the instant inventory concept.

Each organizational work center has a tool list based on the work center or work package concept. The list contains the work center designator, tool nomenclature, National Stock Number, and contract/vendor part number. Tool storage is in silhouetted tool containers so that all tools have individual locations to highlight the fact of a missing tool.

Prior to work on the aircraft, the work center supervisor or collateral duty inspector holds an inventory jointly with the assigned technician, of tool containers to be used on a job. Unnecessary tools will not be carried on the job. Upon job completion another joint inventory will be held. Signing of the maintenance action form by the inspector and work center supervisor is certification that the job is complete and all tools are accounted for. If any tool is missing, the maintenance action form will not be signed and the maintenance officer will be notified.

SAFETY

Operational readiness of the maximum number of aircraft is necessary if naval aviation is to successfully perform its mission. Keeping aircraft in top operating condition is the principal function of naval aviation maintenance personnel. It is essential that maintenance work be performed without injury to personnel and damage to equipment and aircraft.

Electrical/instrument maintenance is, to some extent, naturally hazardous due to the nature of the work, the equipment and tools involved, and the variety of materials required to perform many repairs and maintenance functions. Factors which can function to increase or decrease these hazards are:

1. The experience levels and mental attitudes of assigned personnel.
2. The quality of supervision of the maintenance tasks.

Thorough indoctrination of all personnel is the most important single step in maintaining safe working conditions.

The concept of maintenance safety should extend beyond concern for injury to ground crew personnel and damage to equipment and aircraft. Safe work habits go hand-in-hand with flying safety. Tools left in aircraft, improper torquing of fasteners, and poor housekeeping around aircraft can cause conditions which may claim the lives of flying personnel. Safety on the ground is equally as important as safety in the air.

It has been stated that "While the increased complexity of our modern aircraft is a factor, it is noted that a large number of maintenance-error-caused accidents and incidents are due, not to complexity of equipment, but to lack of supervision and technical knowledge. Many mistakes are simple ones in routine maintenance."

Safety in aircraft maintenance depends largely upon the supervisory personnel. Standards of quality which they establish and maintain are directly reflected in the quality of aircraft maintenance. The primary duty of senior petty officers is to supervise and instruct others, rather than to become totally engrossed in actual production. Attempts to perform both functions invariably result in inadequate supervision and greater chance of error. Supervisors must exercise mature judgment when assigning personnel to maintenance jobs. Consideration must be given to each man's experience, training, and ability.

Sometimes overlooked in a maintenance program are the considerations generally grouped under the term "human factors." These factors are important in that they determine if an individual is ready and physically able to do work safely, and with quality. Supervisory personnel should be constantly aware of conditions such as general health, physical and mental fatigue, unit and individual morale, training and experience levels of personnel, and other conditions which can contribute in varying degrees to unsafe work. Not only is it important that proper tools and protective clothing and equipment be available for use, but also the insistence by maintenance supervisors that they ARE used is of utmost importance.

It is a continuing duty of every person connected with aircraft maintenance to try to discover and eliminate unsafe work practices. Accidents which are caused by such practices may not take place until a much later date and their severity cannot be predicted. The consequences may range from simple material failure to a major accident resulting in serious injuries or fatalities.

There are several areas in which the shop supervisor can effectively work to minimize accidents incident to aircraft maintenance. Among these are continuing inspections of work areas, tools, and equipment; organization and administration of safety programs; and correct interpretation of safety directives and precautions, and energetic and imaginative enforcement of them.

Inspection of Work Areas, Tools, and Equipment

The supervisor should diligently inspect work areas, tools, and equipment to detect potentially hazardous and unsafe conditions and take appropriate corrective action. The AE may be working in the shop, in the hangar, or on the line, and all these areas should be included in the supervisor's inspection.

Fire and explosion hazards present a serious problem. NO SMOKING rules should be enforced, as should the rules for operating electrical equipments during fueling operations or at other times when it would be hazardous. Grounding wires should be used when and where prescribed. Spilled oil, grease, and chemicals should be wiped up immediately, and the rags used should be placed in covered metal containers.

Handtools should be in good condition, of the proper type, and used only for the purpose for which they were intended. *Tools and Their Uses,* NAVPERS 10085 (Series), provides extensive coverage on safe use and care of handtools.

Power tools should be inspected frequently for condition of cord, and to ensure the three-wire cord and three-pin plug are utilized to minimize the possibility of electrical shock.

When replacing a three-wire cord/plug (see fig. 9-1) examine the socket/plug carefully and you will find that one of its two terminals for wire is bright in color, usually nickel plated or tinned. The white wire always connects to this terminal. Another wire, usually black, goes to the natural brass colored terminal. The third prong of the socket/plug is round or U-shaped, and is used to connect the third wire, which is green (sometimes green with a yellow stripe).

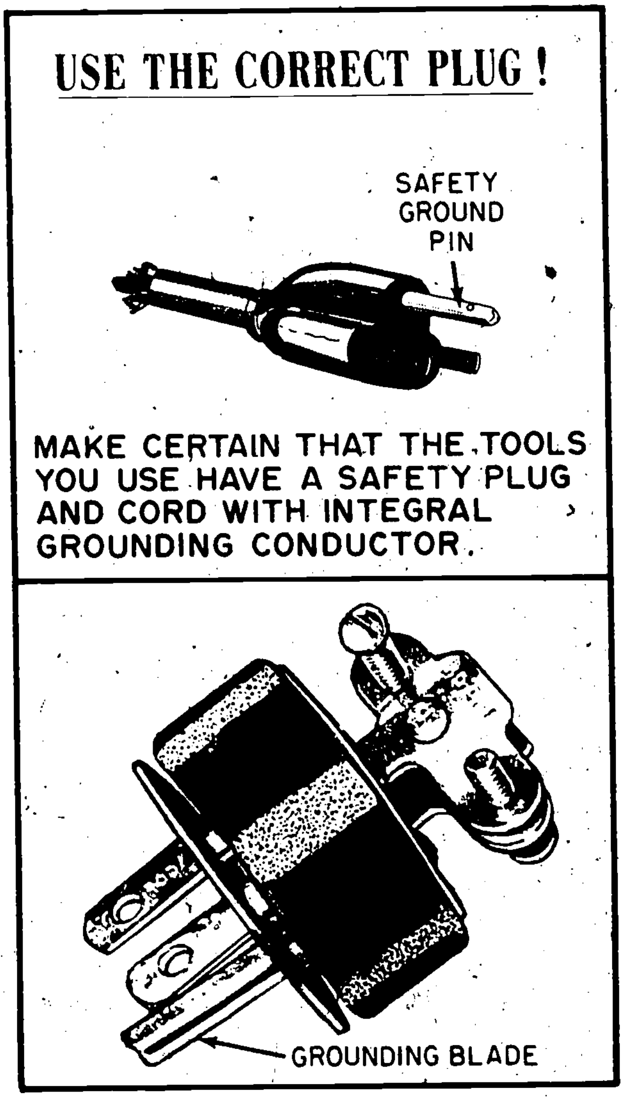

40.67

Figure 9-1.—Typical Grounding Plug.

One exception to the use of three-conductor grounded cord concerns plastic-cased tools (drills, sanders, grinders, etc.) that have been developed to eliminate the risk of electric shock. In these tools the shafts and chucks are isolated electrically from the drive motors. DO NOT replace the two-conductor cable on plastic-cased tools with three-conductor cable IF the plastic-cased tool has an information plate on it stating that "grounding is not required."!

Ensure that equipment is used only by qualified personnel, and that all safety devices and guards are installed, in good condition, and used in the prescribed manner.

Electrical maintenance personnel frequently encounter dangerously high voltages, and adherence to all electrical safety precautions must be required of all personnel. Refer to *Basic Electricity*, NAVPERS 10086 (Series), and the latest issue of *Aviation Electrician's Mate 3 & 2*, for specific electrical safety precautions.

By frequent inspections of work areas the supervisor can discover unsafe work habits of assigned personnel as well as unsafe conditions that exist. This is important since some young and inexperienced personnel, in their concern for optimum functioning of equipment, may neglect the safety warnings found in the manuals for the equipment.

Organization and Administration of Safety Programs

The safety program for electrical maintenance personnel should be conducted with the purpose of making each electrician an electrical safety specialist, trained to recognize and correct unsafe conditions whenever they may occur. Spasmodic drives on accidents cannot substitute for adequate training, as they tend to be quickly forgotten; new situations arise every day and bring new dangers. Work methods which do not expose personnel unnecessarily to injury or occupational health hazards must be adopted. Instruction in appropriate safety precautions is required, and disciplinary action should be taken in cases of willful violations.

The shop safety program generally involves three areas of attention—the posting of the most important safety precautions in appropriate places; the incorporation of safety lessons in the formal training program, and frequent checks for understanding during the day-to-day supervision of work.

Posted safety precautions are more effective if they may be easily complied with. For example, a sign in the battery shop requiring use of goggles and gloves when handling batteries could also point out the location of the gloves and goggles.

Fixed posters and signs should be renewed frequently and not allowed to become rusty, faded, or covered with dust and dirt. General safety posters on bulletin boards and other places should be rotated often to stimulate interest. Appropriate safety posters may be obtained from the squadron or unit safety officer.

Formal safety training sessions should utilize films, books, visual aids, or any other suitable technical material. The men should be told more than just what to do, or what not to do. Each safety subject should be explained in detail. The results of unsafe acts are usually dramatic and easily remembered. Causes of accidents and contributing factors should be reviewed and analyzed. Many good ideas for accident prevention have been developed in training sessions devoted to such analysis.

An extensive series of lessons may be developed over a period of time as latent hazards are recognized, and this will aid in keeping the sessions interesting while avoiding too frequent repetition.

It may be well to mention the new man in the shop at this point. A separate safety indoctrination lesson which covers all the major hazards of the shop should be given the new man as soon as he reports for work. No supervisor with an effective safety program and an excellent shop safety record wants to take the chance that the new man will be hurt before attending the complete series of safety lessons.

In the third area of safety program administration—followup, the supervisor will do well to delegate authority to his subordinate petty officers to assist him in monitoring the program. The attitude of subordinate petty officers toward safety regulations is important. The junior petty officers should respond more readily to the safety program when given responsibilities in the training of new men than when the plea for observance of safety precautions is made solely on the basis of their personal protection.

Also included in the followup area is a responsibility of the shop supervisor to inquire as quickly and thoroughly as possible into the circumstances of accidents and reports of unsafe practices, and to take corrective action or make recommendations to competent authority.

Interpretation of Safety Directives and Precautions

The items in the various safety directives and publications are designed to cover usual conditions in naval activities. Commanding officers and others in authority are authorized and encouraged to issue special precautions to their commands to cover local conditions and unusual circumstances. The shop supervisor must include both of these in the administration of his shop safety program.

Safety directives and precautions should be followed to the letter in their specific application. Should any occasion arise in which any doubt exists as to the application of a particular directive or precaution, the measures to be taken are those which will achieve maximum safety.

When new safety posters or precautions are posted, it is the responsibility of the shop supervisor to correctly interpret their application to his men. In this way he will be able to achieve a unity of thought and action in ~~the ob~~servance of the required safety rule.

The organization's safety officer is available to assist in interpreting and suggesting ways of implementing various safety directives and precautions.

TRAINING PROGRAM

The Navy places great emphasis on effective and continuous training. As a supervisor you have a regular and continuing responsibility for the training of others. An efficient training program will do much to alleviate the loss when experienced and highly skilled personnel are transferred.

The organization's operational readiness depends largely on the capability of the maintenance department. In turn, an important part of the maintenance department's work is performed by the Aviation Electrician's Mate. Consequently, the quality and scope of your training program have a real effect on the organization's effectiveness.

The senior petty officer, as a supervisor, must be able to organize and conduct an efficient shop training program.

Organizing a Shop Training Program

The first phase in organizing a training program should be to determine its objectives. On the shop level, these objectives should be as follows:

1. Training of men on subjects of a general nature as specified by the *Manual of Navy Enlisted Manpower and Personnel Classifications and Occupational Standards,* NavPers 18068 (Series). This training is intended primarily to aid the men in rate advancement.
2. Training of men on specialized subjects; namely, the circuits and equipment used in the squadron aircraft. This training is intended primarily to improve their daily working proficiency, and improved proficiency is generally of more direct benefit to the squadron than rate-advancement training.

The second phase in developing a training program includes a considerable number of steps. The most important of these are:

1. Evaluate each man to be instructed, for the purpose of determining the starting level of the subject matter. For instance, if one or more of the men have never attended a service school, he must be instructed at the basic level of fundamental electricity.
2. List the subjects to be taught. Inclusion of a number of the items on this list will be dictated by the *Manual of Navy Enlisted Manpower and Personnel Classifications and Occupational Standards,* NavPers 18068 (Series). These will be general subjects, a very few of which are electron theory, Ohm's law, capacitive and inductive characteristics, and fundamental transformer theory. The remainder of the list will be made up of specialized items pertaining only to the particular squadron's aircraft.
3. Search out reference books or publications which cover all the items of the foregoing list. The latest revision of NAVEDTRA 10052, *Bibliography for Advancement Study*, is useful in this connection. At this same time, the subjects should be arranged in the most logical sequence for teaching.
4. Prepare a lesson plan for each subject. When the lesson plans are completed, they will have to be approved by the maintenance officer, because he is officially responsible for the contents of such training programs.
5. Procure spaces for carrying out the lecture type portion of the program. This will usually be in the electrical shop. However, if

other space is available, such features as possible seating arrangements, ventilation, lighting, and outside noise levels should be considered in selecting the proper place.

TRAINING METHODS.—Training methods cover a large field, which is a course of study in itself. A closer and more detailed study of this field is made in the *Manual for Navy Instructors,* NAVEDTRA 107. Also, the latest editions of the *Military Requirements Training Manuals,* NAVPERS 10054, 10056, 10057, and NAVTRA 10115 all contain information on training.

Only the simplest methods of training are mentioned here, but these should be sufficient for informal shop-level instruction.

The first lesson in the training program should deal with electrical fundamentals. These serve to prepare the men for the subsequent teaching of specialized equipment. Fundamentals will be taught mostly by lecturing and using a chalkboard to illustrate important points. The instructor must keep in mind during this stage that he is teaching general principles and terms which will be used verbatim when he teaches specific circuits later on. The instructor must cover such fundamentals as electromagnetism and magnetic amplifiers so thoroughly that no question as to their operating principles will arise when they are later encountered in equipment.

Teaching fundamentals on the shop level is more difficult than at service schools, because the instructor probably will not have the means to make demonstrations, or to set up lab problems.

At its best, classroom instruction is limited in effect. Useful and practical knowledge is gained by the trainees when they apply fundamental and theoretical teachings to actual equipment. When commencing instruction on specialized squadron aircraft equipment, the training methods must be changed somewhat. These changes involve breaking each lesson into four steps when teaching equipment. These steps are:

1. Extensive circuit theory and unit function, referencing the appropriate Service Instruction Manual.

2. Operation and observation of the equipment in action, performed by the trainees at the aircraft, under supervision.

3. Making calibration or adjustment, done only when such adjustment is actually needed, and under supervision.

4. Signal tracing, trouble isolation, and parts replacement, done when actually needed, and under supervision.

Each equipment lesson should deal with only one circuit or set at a time, and as many of the foregoing four steps as possible should be carried out in turn. In most cases only steps 1 and 2 will be carried out as routine instruction. Then, when a discrepancy report on a circuit which has been taught through steps 1 and 2 is received, one or more of the trainees may accompany an experienced supervisor to the aircraft and carry out steps 3 and 4. This method of training is thus seen to serve a dual purpose; trains the men to do a job (the second time without direct supervision), and also routine maintenance work is accomplished.

TRAINING MATERIALS AND AIDS.—A limited number of training materials are used in a shop level training program. It may not be practical to build visual aids such as mockups and models, as is done in service schools. The list of materials for the trainees probably will include only note pads, pencils, and as many study texts as can be procured from various sources. The instructor's essential materials will include lesson plans, training records, a chalkboard, and chalk. The required materials will depend mostly on each individual situation. For instance, if a squadron is constantly moving, the chalkboard should be portable, and should fit in a cruise box. For teaching at a shore activity, the chalkboard could be larger and permanently attached to a bulkhead.

A effective shop training program may be further enhanced by the use of training aids. The supervisor should always be on the alert for material that can be utilized as training aids. He must be aware of the existence of applicable training films and, if they are available, schedule them for showing in conjunction with specific lessons.

Types of Training

SCHEDULED TRAINING.–Prepare flexible training schedules. In case of bad weather, operational commitments, and other unit demands, it can be revised as necessary. However, when the time of day and the day of the week have been fixed and the schedule does not have to be changed for one of the reasons listed above, adhere to the schedule.

NONSCHEDULED TRAINING.–This consists mostly of on-the-job training. On-the-job training is predicated upon the system of learning by doing. This system employs a small class comprising an experienced electrician (instructor), and a striker or strikers (trainees), who work together to correct deficiencies in particular equipments. This type of training has a dual advantage in that the necessary maintenance is accomplished along with the required training. The instructor explains clearly the complete procedure he is following while performing the maintenance, and questions the trainee throughout the procedure. Thus he is able to instruct and to determine the trainee's progress. The instructor will gain in experience, confidence, and leadership. There should be a complete record kept of all on-the-job training.

TRAINING RECORDS.–From the foregoing, it is apparent that people may become trained to various levels on equipment. This is true because some may miss lessons at times. There is also the probability of personnel turnover. Obviously, you must see that a training record is carefully kept on each man, with an entry made each time he has undergone instruction.

SPECIALIZED MAINTENANCE TRAINING.–The supervisor can do much to improve the performance level of his men by maximum utilization of the specialized maintenance training that is available. This includes Naval Air Maintenance ~~Training Group~~ units, C-type schools, etc.

The Naval Air Maintenance Training Group provides on-site training for officers and enlisted personnel in the operation, maintenance, and repair of aeronautical weapon systems and associated equipment.

The FASOTRAGRUs (Fleet Aviation Specialized Operational Training Group) provides instruction of Fleet personnel in courses covering operational and tactical employment of specific equipment and systems. Information regarding availability of courses is contained in the COMNAVAIRLANT/COMNAVAIRPAC 1500 (Series) Instructions.

The NAVAIREWORKFACs (Naval Air Rework Facilities) provide certain specialized training for military personnel in the maintenance of modern aeronautical weapon systems. This training is not intended to duplicate any present courses of instruction provided by the NAMTRADETs (Naval Air Maintenance Training Detachment), but is intended to supplement the other training courses. Most courses are of short duration and emphasize troubleshooting, alignment, specialized training, and bench work on various accessories and components. These courses are tailored to the operational requirements of the Fleet and the Training Commands and are listed in NAVAIRSYSCOMREPLANT/PACINST 1500.2 (Series).

In addition to utilizing the schools mentioned above, the quality of maintenance training can be enhanced by utilizing the assistance offered by Naval Aviation Engineering Service Unit (NAESU) engineers in the training program.

SUPERVISION OF REPAIR WORK

One of the most important duties of a senior AE is that of supervising repair work. The electrical/instrument supervisor is responsible for the electrical/instrument work performed on the line as well as that performed in the shop.

One of the most important aids in supervision is a job plan. When setting up a job plan, consider these questions:

1. What is the job?
2. How can it be accomplished?
3. How many men are required?
4. What tools and materials are necessary?

Detailed responsibilities of the electrical/instrument shop supervisor include analysis of reported discrepancies, scheduling, job priority, assignment of personnel, checking work in progress, and inspecting completed work.

ANALYZING DISCREPANCIES

Knowledge of the causes of previous discrepancies plays an important role in the evaluation of newly reported discrepancies. Work centers are not required to maintain a file of past VIDS/MAF discrepancies after the MDR-1 is verified, as maintenance control retains these for a minimum of three months. Maintenance control also retains completed calendar, phase, and special inspection records and completed checkflight records for a minimum of 6 months. All of these could prove helpful in analysis of repetitive discrepancies or in establishing trends.

Another source of information is the service publications distributed by some of the manufacturers. These publications will not be used in lieu of the Maintenance Instructions Manuals, but they still provide valuable servicing and troubleshooting hints as well as simplified operational analysis.

Each shop should have a qualified representative available during the pilot/crew debrief after each flight. This will assure a better understanding of the reported discrepancy, which is essential for effective troubleshooting.

JOB PRIORITY AND SCHEDULING

Determining which jobs should be performed first is one of the major responsibilities of the supervisor. This is an important phase of the work, for these decisions determine the use of facilities—men, material, and machinery. Routine work presents no particular problem to a well organized shop, but rush jobs can cause much confusion unless they have been thought through and steps have been taken to see that the work follows well founded principles.

When scheduling work, ensure (if practical) that the men or crews will be working on different types of jobs. If a number of men or crews are assigned to the same type jobs there may be an overdemand for certain test equipment, tools, and workspace. This often results in confusion and loss of time.

It is also important to schedule activities so that work is accomplished in the proper sequence. This is especially important if you have men working on different phases of the same job.

Future job assignments should be included in the work schedule so that time will be allotted to accomplish them. This may make it necessary to rearrange the present work schedule to ensure that special jobs will not interfere with the accomplishment of routine work.

ASSIGNMENT OF PERSONNEL

In distributing work, be fair to all the men. It is a natural inclination, and a part of every person's makeup, to give the breaks to the people he likes. The important thing is to realize that you have this inclination and to control it.

Avoid having a man do all the work of one type just because he happens to be an expert in that particular phase of the work. Pass the work around so that each man has an opportunity to develop his skill in all phases of an electrician's job. Assign strikers to assist with various kinds of work so they will gain experience on all kinds of jobs.

Rotating assignments makes the work more interesting for the men and, in addition, better qualifies them for advancement in rating. Another good reason for rotating assignments is that if one highly skilled man does all the work of a certain type, the shop will be at a great disadvantage should he ever leave the crew.

The man who is going to do the repair job may require detailed instructions on how the job is to be performed. The senior AE should be careful to see that the man fully understands what he is going to do, so as to prevent any mistakes due to misunderstanding of instructions. The amount of instruction depends upon the knowledge and experience of the man concerned. If he is an experienced rated man, it may only be necessary to tell him what repairs must be accomplished. Inexperienced men will need additional instructions on what test equipment to use, and the proper procedure to follow. Men should understand that they are free to ask questions in case they are in doubt about any details in doing their assigned work.

In addition to giving instructions on how a job should be accomplished, it is also advisable to be sure the worker understands the importance of the job, the origin of the job, and the part that each person will play in accomplishing the work. In general, men are interested in why a job is necessary and how it is to be accomplished, and will usually turn out better work when they have a clear picture of the total job.

CHECKING PROGRESS OF WORK

The assignment of work is only the first step in processing a job. The AE who is in charge must know his men. He should have a fairly good idea of each man's skill and ability, as well as each man's knowledge regarding the operation of equipment and the accomplishment of repair work.

The best way in which the AE supervisor can obtain this knowledge is to make frequent inspections and check the progress of work being performed. In that way, he will have a good idea as to which jobs, or which men, require the most supervising.

When checking on the progress of work, the senior AE should be sure the men are observing proper safety precautions in regard to themselves and the equipment they are operating. In addition, he should see that each man is using the proper tools, and note the quality of work being performed.

In case of any doubt, the supervisor should check to see that the men understand his instructions properly and are doing the work correctly. If necessary, he should provide additional instructions to give a better understanding of the job, or to improve workmanship. By frequently talking to the men and answering their questions, the supervisor can prevent work and material from being wasted, as could be the case if he were not available to give the correct details.

Complications may develop on some repairs which may require additional planning and revised repair procedures. By observing the progress of the various jobs, and whether any are ahead or behind the planned schedule, the supervisor will be able to change the schedule in order to prevent "bottlenecks."

INSPECTING COMPLETED WORK

When a job has been completed, the senior AE should ensure that the work is inspected as required, remembering that QARs or CDQARs are required to conduct final inspection of all maintenance tasks which at their completion require an aircraft to have a functional checkflight.

The inspector is responsible for determining whether the repair job, including replacement parts, meets the following standards:

1. Have the repaired parts been correctly installed in accordance with instructions?
2. Is the repaired item or replacement part free from defects in material and workmanship?
3. Have all parts or accessories to the repaired equipment been replaced or reinstalled correctly?
4. Has the proper replacement part been used in making repairs?
5. Has the part or item been properly checked and certified ready for service?

The existence of a properly functioning quality assurance division in no way decreases the responsibility of the shop supervisor for the quality of work accomplished. Since the work was performed by shop personnel under the direct supervision of the senior AE, the quality of the work is fundamentally a shop responsibility.

Functional Checkflight

Airborne electrical/instrument equipments are thoroughly checked after repairs, both in the shop and on ground test after reinstallation in the aircraft. However, some types of repairs are not considered complete until the equipment's performance is proved in actual flight.

Checkflight checklists are promulgated by direction of the Commander, NAVAIRSYSCOM, and issued as NAVAIR 01-xxx-1-6, NATOPS Functional Checkflight Checklist. Additional requirements may be imposed by operational commanders as necessary for environmental conditions and aircraft types.

Checkflight checklists shall contain provisions for recording:

1. Required instrument indications.
2. Satisfactory or unsatisfactory performance of all listed items or systems.
3. Detailed comments and recommendations concerning the flight.

Completed checkflight checklists shall be retained in the aircraft maintenance files for a minimum of six months, or for one calendar/periodic inspection interval, whichever is greater.

MAINTENANCE PROCEDURES

Performance testing data, along with other maintenance information, is covered in the Maintenance Instructions Manual for each particular electrical/instrument equipment. This information has been written to enable the electrician to make an intelligent evaluation of the operating capabilities of that equipment; at the same time, the data serve as a gage for the measurement of equipment efficiency. The standards are designed to ensure the equipment operates at maximum efficiency at all times, and to reveal any change from this optimum performance, thus indicating the need for corrective measures.

The information presented in these manuals gives the electrician a step-by-step performance check with all the test connections and test equipment clearly indicated for each step. Performance testing is discussed to show the relationship between that type of testing and preventive maintenance, as a means of emphasizing that the final results may indicate the need for corrective maintenance. Both preventive maintenance and corrective maintenance are discussed in the following paragraphs. Troubleshooting—considered as the principal form of corrective maintenance—is analyzed in detail.

PREVENTIVE MAINTENANCE

The best maintenance work is preventive in nature, potential failures being detected and corrected before they have a chance to develop. Preventive maintenance is defined as those measures taken periodically, or when needed, to achieve maximum efficiency in performance, to ensure continuity of service, and to lengthen the useful life of the equipment or system. This form of maintenance consists principally of cleaning, lubrication, and periodic inspections aimed at discovering conditions which, if not corrected, may lead to malfunctions requiring major repair.

Inspections and Tests

Inspections fall into two main categories. First, there is the regular visual inspection of the mechanical aspects of the equipments. This is conducted for the purpose of finding dirt, corrosion, loose connections, mechanical defects, and other sources of trouble. Second, there are functional inspections that are accomplished through periodic tests and through less-frequent bench tests. To realize the most effective results from the regular functional inspections, a careful record of the performance data on each equipment must be kept.

The value of performance data records is demonstrated in a number of ways. Comparison of data taken on a particular equipment at different times reveals any slow, progressive drifts that may be too small to show up significantly in any one test. While the week-to-week changes may be slight, they should be followed carefully so that necessary replacements or repairs may be made before the margin of performance limits is reached. Any marked variations should be regarded as abnormal, and should be investigated immediately. Another advantage in keeping systematic records of performance and servicing data is that maintenance personnel more rapidly develop familiarization with the equipment involved. The accumulated experience contained in the records furnishes a guide to swift and accurate troubleshooting.

The actual work of testing and servicing, as well as that of recording performance data, should be done systematically. While a logical sequence of steps is required, this does not imply the rigid necessity of making only a step-by-step progression. Working within the overall pattern of procedure, maintenance personnel should analyze the results obtained and eliminate unnecessary steps.

CORRECTIVE MAINTENANCE

Corrective maintenance consists of the location and correction of troubles whenever an equipment or system fails to function properly. Location of the trouble includes evaluating reported discrepancies, followed by troubleshooting.

The trouble may be corrected by mechanical or electrical adjustments, or it may be necessary to replace one or more parts.

Evaluation of Reported Discrepancies

When a discrepancy is turned in either by crew debriefing or on a "gripe sheet," the first thing to determine is whether the system or equipment is actually faulty. A mistake, often made, is in removing the equipment from the aircraft before checking it.

The senior AE should have a prescribed procedure for electricians to follow in checking a discrepancy on equipment installed in an aircraft. Some suggested procedures that will aid in evaluating discrepancies are:

1. Visual inspection. A visual inspection of the equipment in the aircraft may disclose frayed or broken wiring, loose connections (electrical and mechanical), or open circuit protectors, which could cause the malfunction.
2. Operational check. An operational check of the system can aid in analyzing the discrepancies and pinpointing the trouble to a particular unit. In some cases, it may disclose improper operating procedures—especially with newer type equipment or new personnel.
3. Performance checks. The use of portable test equipment, built-in meters, and special test equipment installed in some types of aircraft will aid in making a performance test of the system in the aircraft. Performance testing, mentioned in the first part of this chapter, should be of great help in localizing the discrepancy to a particular unit which can be removed from the aircraft for repair, or in some cases, repaired in the aircraft.
4. Quality assurance inspections. Highly qualified senior electricians should be provided to conduct thorough inspections on all equipment prior to installation in the aircraft. This quality control inspection should be a combination of the visual inspection, operational check, and performance check. This inspection will ascertain that each equipment is in proper operating order and completely mission ready.

Troubleshooting

Corrective maintenance is, for the most part, concerned with troubleshooting, which can be further divided into two phases. The first phase is system troubleshooting. It is based on the starting procedure, and is designed to locate the unit in which the trouble exists.

The second phase is unit troubleshooting, and is designed to locate the trouble in the unit in which it occurs. In rare cases it is possible to determine which unit is at fault without following the system troubleshooting method to isolate the unit. However, most of the time it is impossible to determine which unit is at fault until the system method has been employed in whole or in part.

TROUBLE ISOLATION.—When abnormal operation has been traced to a particular stage or to a functionally related group of stages, its cause must be further isolated and identified as due to a particular faulty component or group of components. To do this it may be necessary to disassemble the equipment, either in whole or in part. After disassembly, the trouble may be immediately apparent through a mere visual inspection, whereupon the trouble should be corrected by repair or replacement.

If the trouble is not immediately apparent, a more detailed procedure should be followed to isolate and repair or replace the actual circuit component responsible for the failure. This procedure consists of voltage and resistance checks, waveform analysis, and finally, repair or replacement of the defective component.

Supervisory personnel should ensure that detailed trouble isolation procedures are in accordance with the applicable current Service

Instruction Manual for the equipment being repaired.

VOLTAGE MEASUREMENTS.–Since most trouble encountered in electrical equipment and systems either result from abnormal voltage or produce abnormal voltages, voltage measurements are considered an indispensable aid in locating trouble. Testing techniques that utilize voltage measurements also have the advantage that circuit operation is not interrupted. Point-to-point voltage measurement charts which contain the normal operating voltages encountered in the various stages of the equipment are available to the electrician. These voltages are usually measured between the indicated points and ground unless otherwise stated.

When voltage measurements are taken, it is considered good practice to set the voltmeter on the highest range initially so that any excessive voltage in a circuit will not damage the meter. To obtain increased accuracy, the voltmeter may then be set to the designated range for the proper comparison with the representative value given in the voltage charts.

If the internal resistance of the voltmeter and multiplier is approximately comparable in value to the resistance of the circuit under test, the meter will indicate a considerably lower voltage than the actual voltage present when the meter is removed from the circuit. The sensivivity (in ohms-per-volt) of the voltmeter used to prepare the voltage chart is always given on the charts. Therefore, if a meter of a similar sensitivity is available, it should be used so that the effects of loading will not have to be considered.

When checking voltages, it is important to remember that a voltage reading can be obtained across a resistance, even if the resistance is open. The resistance of the meter and the multipliers forms a circuit resistance when the meter probes are placed across the open resistance. Thus, the voltage across the component may appear to be normal when the meter is connected, and abnormal when it is disconnected. If the voltages appear normal on a suspected faulty stage, the next step would be to perform a resistance check of that stage.

NOTE: Certain precautions are presented in *Basic Electricity*, NAVPERS 10086 (Series), as general safety measures pertinent to the measurement of voltages. Supervisors should ascertain that these precautions are adhered to by all personnel who are responsible for the maintenance of electrical/instrument equipment.

RESISTANCE MEASUREMENTS.–Defective components can usually be quickly located by measurement of the dc resistance between various points in the circuit and a reference point or points (usually ground). This is true because a fault will generally produce a change in resistance values. Point-to-point resistance charts can be used advantageously at this time. The values given, unless otherwise stated, are measured between the indicated points and ground.

Before making resistance measurements, the electrician should make sure that the power to the equipment under test has been turned off. Since an ohmmeter is essentially a low-range voltmeter and a battery, an ohmmeter connected to a circuit which already has voltages in it may be seriously harmed. The pointer may be deflected off-scale, and the meter movement may be permanently damaged.

Filter capacitors must be discharged before making resistance measurements. This is extremely important when testing power supplies that are disconnected from their loads. If a capacitor discharges through the meter, the surge may burn out the meter movement. Furthermore, contact with a circuit containing a charged capacitor may endanger the life of the person making the test.

WAVEFORM COMPARISON.–The measurement and comparison of waveforms are considered to be very important parts of the circuit analysis used in troubleshooting. In some circuits (for example, pulse circuits), waveform analysis is indispensable. Waveforms may be observed at test points shown in the waveform charts which are part of the maintenance literature for the equipment. It should be noted that the waveforms given in the instruction books are often idealized and do not show some of the details which are normally present when the actual waveform is displayed on an oscilloscope.

By comparing the observed waveform with the reference waveform, faults can be localized rapidly. A departure from the normal waveform indicates a fault that is located between the point where the waveform is last seen to be normal and the point where it is observed to be abnormal.

When waveforms associated with a multivibrator, such as the gunfiring interlock, or a similar circuit are observed to be abnormal, replace the associated component before making further tests.

If there is no trouble present in an equipment or system, a waveform observed at a point in the equipment should closely resemble the reference waveform given for that test point. The reference waveforms supplied with maintenance literature are the criteria of proper equipment performance. However, test equipment characteristics or usage can cause distortion of the observed waveform, even though the equipment or system is operating normally. Several of the most common causes of these conditions are summarized as follows:

1. The leads of the test oscilloscope may not be placed in the same manner as those preparing the reference waveforms, or the lead lengths may differ considerably. This is particularly significant in the case of shielded test leads, where the capacitance per unit length is a factor.
2. A type of test oscilloscope having different values of input impedance, different sweep durations, or different frequency response may have been used.
3. The equipment operating (and servicing) controls may not have settings identical to those used when the reference waveforms were prepared. This condition is normally to be expected when servicing adjustments are made in terms of their effect on the shape and amplitude of an observed waveform.
4. The vertical or horizontal amplitudes of the reference and test patterns may not be proportional. This will produce apparent differences between the waveforms when actually there is no difference.

Whether or not a minor waveform discrepancy may be disregarded depends upon the type of circuit being traced. A minor discrepancy is not regarded as significant unless the nature of the discrepancy indicates faulty operation of the equipment. In general, time should not be wasted in searching for faults when relatively minor differences are detected between the reference waveforms and those obtained by test.

Modular Units

The demand for small maintainable circuitry in naval aviation has led to new construction techniques. Miniature and microminiature components and modular circuits now exist. Modular assemblies of today incorporate several subminiaturized features which require special training, facilities, and equipment, for maintenance.

A weapon system is no more dependable than its components. Because of this, NAVAIR has provided guidelines for the repair of aeronautical components to improve the cost effectiveness of a weapon system by repairing components at the lowest practical level of maintenance. This component repair program encompasses those functions performed by depot, intermediate, and organizational maintenance.

The growing emphasis on compactness and miniaturization has increased to the point where a specialized technique coupled with patience and dexterity is required in maintaining these circuits.

Personnel are trained through formal courses provided by the NAMTDs or an equivalent contractor course approved and provided by NAVAIR. Following initial training and certification as repair technicians, personnel qualifications and proficiency will be rechecked periodically to ensure adherence to established standards.

While it is true that special tools and techniques are required, it is also true that satisfactory repairs can be made to any miniaturized circuit by using just a little care and common sense. Actually, with a little experience, repairs can be made as easily as in conventional assemblies, often more easily because of improved accessibility.

In addition to personnel certification, miniature component repair will be accomplished only by activities which have been certified as having the capability.

REPAIR OF DEFECTIVE COMPONENTS.—One of the time-consuming elements of troubleshooting is the identification of specific components. In conventionally wired equipment, components are not always easy to locate; even the circuitry in the chassis can become confusing since related components are often positioned in decentralized areas of the chassis.

In equipment which includes printed circuit boards, identification of circuitry and components may be relatively simple. This type of circuit construction allows uniform placement of components and complete sectionalization of related circuitry. Just a quick, once-over glance of such circuitry is often all that an electrician requires to formulate the overall layout of the chassis in his mind and quickly focus his attention on the area of particular concern.

Many of the commercial manufacturers have developed methods of quick identification. One of the most common ways is to impose a grid over a drawing of the board, and then furnish a table which lists the part location. Another technique is to number points of interest on the schematic, then provide a pictorial guide to locate the points on the board.

Circuit tracing of the printed wiring board may be simpler than that of conventional wiring, due to increased uniformity. If the wiring board is translucent, a 60-watt light bulb placed underneath the side being traced will facilitate circuit tracing. Test points can be located in this manner without viewing both sides of the board.

Resistance or continuity measurements of coils, resistors, and some capacitors can be made from the component side of the board. In some cases, a magnifying glass will help in locating very small breaks in the wiring. Voltage measurements can be made on either side of the board. However, a needlepoint probe is needed to penetrate the protective coating on the wiring. Hairline cracks can be located by making continuity checks.

A number of general precautions are necessary when working with modular assemblies. Supervisory personnel should take steps to ensure that the electricians in their shop or maintenance crew know and understand the rules set forth in the following paragraphs:

1. Observe power supply polarities when measuring the resistance of circuits of modular assemblies containing transistors, or other semiconductors. Such parts are polarity and voltage sensitive. Reversing the voltage applied to a transistor or other semiconductor will ruin it very quickly.

Since transistors and similar components require different power supply connections, personnel who work with these parts must always be alert in connecting test equipment. Make sure that the correct polarity and range are observed. Recheck the work before turning on the power—the wrong polarity will destroy the part.

2. Avoid applying ac power operated test equipment or soldering iron without first making certain that powerline leakage current is not excessive. Use of an isolation transformer is a good precaution to employ with all test equipment and soldering irons operated on ac power, unless it has been determined that the equipment contains a transformer in its power supply or shows no current leakage. With all test equipment (whether transformer-operated or not), it is good practice to connect a common ground lead first from the ground of the circuit to be tested, and then to the test equipment ground.

3. Avoid using too much heat, as solid-state parts and their associated circuitry are extremely sensitive to heat. Heat sinks/shunts should be applied and shields inserted to protect adjacent parts any time repair or removal of a part requires the use of a soldering iron.

4. Avoid application of too high a signal from test equipment. The safest procedure is to start with a low output signal setting, and then proceed to apply the required signal levels. Be sure that the signal applied is below the rating given for the circuit under test. Relatively high current transients can occur when test equipment is connected to a circuit where low-impedance paths exist.

5. Avoid moving loose connections, disconnecting parts, inserting or removing transistors or similar components, and changing modular units while the equipment power is on or while the circuit is under test. Moving a loose connection, or any of the actions mentioned, may cause an inductive kickback. This can be prevented by being sure that all parts in the circuit are secure before starting the test or turning on the equipment power. Be sure to remove all possible capacitance charges from parts and test equipment before applying them to a modular assembly. When changing modular assemblies, be sure the equipment power is off.

DRAWINGS AND SCHEMATICS

The senior AE will find a twofold use for his ability to properly interpret schematics and drawings. The need to interpret drawings and schematics will continue to be a part of accomplishing his maintenance tasks. In addition, the senior AE will be required to assist the less experienced men in interpreting schematics. Often when working with the less experienced men, the need for simplified versions of these schematics and drawings will arise.

INTERPRETATIONS

Instruction manuals used by the AE may contain diagrams of various types; among these are schematic diagrams, block diagrams, wiring diagrams, interconnecting cable diagrams, mechanical drawings, and combinations of some of these types. These diagrams are normally used to present a great deal of information in a small space, or to clarify complex and detailed written explanations. The ability to correctly interpret these diagrams will, to some extent, determine the level of technical knowledge and understanding the senior AE can achieve.

Schematics

Electrical and electronic schematics will comprise a large portion of the diagrams the electrician uses. Symbols are the building blocks of the schematic. The AE should be familiar with the basic symbols from past experience. The increasing use of semiconductors has added new symbols, and future developments will undoubtedly add more. A study of new symbols and a review of the older standard symbols should be helpful to the AE.

A list of standard symbols can be found in the publication IEEE No. 315 entitled *IEEE Standard and American National Standard GRAPHIC SYMBOLS for ELECTRICAL AND ELECTRONICS DIAGRAMS.* This manual has been adopted for mandatory use by the Department of Defense.

Another basic consideration in schematic interpretation is recognizing specific type circuits. Here again it may be advisable for the AE to review the basic circuits using electron tubes, semiconductors, or the two in combination. The basic training manuals (*Basic Electricity*, NavPers 10086 (Series), and *Basic Electronics*, NavPers 10087 (Series), are sources of review material for these circuits.

Drawings

Included in the drawings used by the AE are block diagrams, signal flow charts, wiring diagrams, and mechanical drawings. As with schematics, the electrician will be familiar with some of these drawings from past experience. The use of block diagrams and signal flow charts to present the overall picture of equipment function is widespread. Although these do not contain the details so often needed in accomplishing maintenance tasks, they are of great value in fulfilling training responsibilities and in providing overall continuity when working with partial schematics.

Wiring diagrams, especially in some current aircraft and equipment, have become quite complex. With the emphasis now placed on integrated electronic systems, a review of wire and cable identification markings and symbols that show the interconnection of units should be useful to most electricians.

The use of mechanical drawings and the inclusion of mechanical functions on electronic diagrams is increasing. This is due, in part, to the increased use of computers and automatic devices (electronically controlled and mechanically operated).

The electrician must understand mechanical symbols and basic mechanical principles in order to correctly interpret these drawings. The basic training courses are a source of useful information in this field.

MAKING SIMPLIFIED VERSIONS

Making simplified versions of drawings is not as new to the AE as some may think. Each time the instructor draws a circuit to explain a point about a large schematic, he is in fact making a simplified version of the schematic. The electrician may make simplified versions of drawings for various reasons: to explain a portion of the drawing while working with someone; in connection with the formal training program; or quite often as a means of better understanding a complicated drawing himself.

When making a simplified version of a drawing, use standard symbols, especially in drawings used for training.

There are many possible ways to simplify a drawing. The AE must determine why the diagram needs simplification; this reason may indicate how to go about making the simplified version.

While simplification is usually thought of as reducing the whole into parts, there are cases where combining drawings makes them more easily understood. In working with inexperienced men, it may be necessary to redraw a circuit to more closely resemble the basic circuit of this type.

SPECIAL MAINTENANCE PROBLEMS

As the ceiling for aircraft on extended flights has been raised higher and higher, many new types of operating and maintenance problems have developed. Some of the various types of equipment involved are generators, voltage regulators, electric motors, and solenoids. Electric brushes on generators, inverters, electric motors, and other rotating electrical machinery wear away very rapidly at high altitude (around 40,000 feet). This problem has been eliminated in brushless generators which are used in most modern aircraft. Some of the other equipment—inverters, motors, etc.—are operated within a pressurized environment which is less detrimental to brushes than if operated at actual aircraft altitude. Further still, special brushes have been developed that have longer life at high altitude than before. Thus, upon brush replacement it is necessary that you utilize the proper type brush.

While most switches will break a circuit safely at sea level, their contacts may burn and in some cases even melt at high altitude. It has been found that double-break contact switches somewhat alleviate this fault. Since electric and electronic systems use special design switches for high altitude operation, when making a replacement it is necessary to use the proper type.

Other items that often fail during high altitude flights are electrical plugs and receptacles. A voltage breakdown occurs between the pins and shell along the surface of the insulating material. The result is a burned plug. This happens because the breakdown voltage is less at high altitude. For example, the breakdown voltage for a 1/4-inch airgap is about 3.7 times greater at sea level than at 40,000 feet.

This condition may be overcome by sealing the connector with a potting compound. This reduces the probability of arc-over between pins or between pins and the shell of the electric connector since the dielectric characteristics of the connector are improved. This sealing compound also protects the connectors from corrosion or contamination by excluding metallic particles, moisture, and aircraft fluids. For information regarding the application of a sealing compound consult the instructions issued with the sealing compound.

ENVIRONMENTAL CONSIDERATIONS

In recent years the effect of environmental conditions upon the operation of electronic and electrical equipment has greatly increased the maintenance problems of the electrician. These peculiar conditions may be grouped under the major headings of altitude, temperature, and humidity. At the extremes of these conditions special maintenance and operating procedures are required. Equipments required to function at these extremes frequently fail due to the effect of decreased air density, radical temperature changes, and moisture.

Continuous damp, warm air causes condensation of atmospheric moisture within equipment unless units are hermetically sealed or the interiors are heated with relatively moisture-free air. Moisture forms leakage paths and causes corrosion. These climatic conditions promote rapid fungus growth which in itself has a corrosive effect on materials such as wire, switch contacts, and other metal parts.

Adverse Climatic Conditions and Their Effects

Humidity is a term describing the amount of water vapor in the air. It is usually expressed as a percentage of the total amount of water the air can hold at a given temperature. Thus, 50 percent means the air contains one-half the total water it can hold, and 100 percent means it contains all it is capable of holding. Air can hold more water as its temperature increases. In tropical areas the humidity varies between 60 and 100 percent. This high humidity accounts for the condensation of moisture, or sweating on various parts of electrical and electronic equipments when they undergo temperature changes. Moisture reduces the insulating qualities of insulation materials and results in arc-overs and shorts between terminals. The water vapor also penetrates into the body of insulation, is absorbed, and causes similar effects. High humidity also causes corrosion of metals. Other sources of moisture which cause deterioration include fog, salt spray, and rain.

In general, equipment may encounter extreme temperatures, possibly ranging from minus 65°F to 135°F, under various climatic conditions of high humidity, fog, rain, salt spray, salt air, cold, insects, fungi, and dust. High temperature and moisture vapor cause rapid corrosion. Fungus and bacterial growths produce acids and other products which speed corrosion, etching of surfaces, and oxidation. This interferes with the operation of moving parts, screws, etc., and causes dust between terminals, capacitor plates, and other parts, which produces noise, loss in sensitivity, and arc-overs.

Variations of temperature cause moisture to be breathed through any small cracks, pinholes, or vents in the equipment. As the temperature rises, the air inside a piece of equipment expands and it is expelled, in part, through the openings and vents. When the temperature falls, the air inside the equipment contracts and outside air is admitted through all openings and vents. The moisture which is breathed destroys the insulating qualities of dielectrics and corrodes metals.

Fungus is a form of plant life which feeds on materials of vegetable and animal origin including paper, cotton, etc., and such things as dead insects and other fungi. These may be spread by wind, dust, dirt, and insects, such as ants, flies, and mites. Growth may take place on materials other than those of organic origin if a spot of dust or other nutrient substance is present. Fungi thrive in the high humidities and temperatures. Fungus growth causes decay, accelerates the deterioration of insulating materials, and short circuits items such as relays, jacks, and keys. Fungus growth in aircraft fuel tanks, especially the ones using jet fuel, presents special problems which, left unattended, can cause much work for the AE in the maintenance of fuel quantity circuits.

Electronic and electrical package compartments cooled by ram air or compressor bleed air are subjected to the same conditions common to engine and accessory cooling vents and engine frontal areas. While the degree of exposure is less because of a lower volume of air passing through the special design features incorporated to prevent water formation in the enclosed spaces, this is still a trouble area that requires special attention. Circuit breakers, contact points, and switches are extremely sensitive to moisture and corrosive attack and should be inspected for these conditions as thoroughly as design permits during routine checks. If design features hinder examination of these items while in the installed condition, advantage should be taken of component removals for other reasons, with careful inspection for corrosion required before reinstallation. Treatment of corrosion in electrical and electronic components should be performed only by, or under the direction of personnel familiar with the function of the unit involved, as conventional corrosion treatment may be detrimental to some units.

Even though protective paint systems and extensive sealing and venting provisions are used in battery compartments, these compartments continue to be corrosion problem areas. Fumes from overheated battery electrolyte are difficult to contain and will spread to all adjacent internal cavities, causing rapid corrosive attack on unprotected surfaces. If the battery installation includes an external vent opening on the aircraft skin, these areas should also be included in the battery compartment inspection and maintenance procedure. Frequent cleaning and neutralization of acid deposits in accordance with instructions in the maintenance instructions manual will minimize corrosion from this cause. This will continue to be a serious problem area until all battery installations are replaced with some type emergency backup generator system.

Climatic Deterioration Prevention

Most new equipment is given a climatic deterioration prevention treatment which provides a reasonable degree of protection against fungus growth, moisture, corrosion, salt spray, insects, cold, desert heat, etc. The treatment involves the use of a lacquer or varnish coating material applied with a spray gun or brush. Detailed instructions dealing with the treatment of corrosion problems may be found in *Corrosion Control for Aircraft*, NA 01-1A-509.

RADIO NOISE INTERFERENCE

Suppression of radio interference is a task of first importance to maintenance personnel. The problem has increased in proportion to the complexity of both the electric system and the electronic equipment. The aircraft, the engine, the electric system, and the electronic equipment are involved in the problem. Almost every component of the aircraft is a possible source of radio interference, which is the main factor in preventing the operation of receivers at full sensitivity. All personnel concerned should be familiar with the problem of radio noise and how to eliminate it.

The overall effect of radio interference of any kind is to impair or deteriorate the performance and reliability of radio and electronic sets or systems. The interference may act directly by actual deterioration of the equipment response, or indirectly by wearing down the patience and tolerance of the human operator. Either way, the result is the same, since combat efficiency is materially reduced.

The AE should know the following:

1. What radio interference is.
2. Where the interference originates.
3. How it gets into equipment.
4. How to identify it.
5. How to suppress it at its source.
6. How to segregate its path of entry into a receiver.
7. How to prevent its entry into a receiver.
8. What considerations enter into the design of an interference-free equipment.
9. How to position and install electrical and electronic devices to preclude radio noise generation.

This information is presented in detail in the publication, *Reduction of Radio Interference in Aircraft*, NavAir 16-1-521. Some of the most important of this information is presented briefly in the following pages.

Sources of Radio Noise

Sources of radio noise are divided into three general groups—atmospheric static, precipitation static, and manmade radio noise.

ATMOSPHERIC STATIC.—Atmospheric static, or "atmospherics," is a burst of RF energy caused by electrical discharges in the atmosphere. Although the frequency spectrum of atmospheric static is very wide, only frequencies in and below the high-frequency band propagate far enough to be very troublesome at long distances from the electrical disturbance. Therefore, UHF and VHF receivers are seldom troubled by atmospheric static. Reduction of such static is obtained by the use of frequency modulation, directional antennas, and noise-limited circuits. Frequency modulation is not used extensively in aircraft radio communication because of the bandwidth requirements.

PRECIPITATION STATIC.—Precipitation static is caused by the development of large static charges on the aircraft when it is flown through snow, rain, ice crystals, or dust clouds. An aircraft can build up a charge of several hundred thousand volts in a few seconds. The resulting high-voltage gradients at extremities and sharp points exceed the breakdown strength of air and cause noisy corona discharges. The conventional radio antenna, which must stand away from the body of the aircraft to be of effective height, is exposed to high electric fields. This means that corona discharges occur first in the antenna system, the very place that is most sensitive to noise. Precipitation static is reduced by using a completely insulated antenna system—that is, by using highly insulated wire instead of bare wire, and by insulating all connections and supports for the antenna wire. Precipitation static is reduced also by eliminating all sharp metal projections from the aircraft and by installing dischargers, which quietly discharge accumulated static charges at a high rate. A discharger consists of silver-impregnated cotton wicking encased in a flexible plastic tube with an aluminum mounting lug. The many fine high-resistance fibers provide a multitude of discharge points. The resulting discharges are quiet up to very high currents. For detailed information on precipitation static refer to *Installation and Maintenance Instructions Manual, Anti-Precipitation Static System,* NA 16-1-518.

The effect of precipitation static is a loud hissing or frying noise from the speaker or headset of the radio equipment and interference (grass) on the picture tube of visual output receivers. As an AE, you should not be too concerned with precipitation static since it is produced only when the aircraft is flying. Also, the preventive measures that are taken are the primary responsibility of other ratings. However, the AE should be aware of its characteristics because there is the probability that he may be asked to correct for radio interference that is caused by precipitation static. Unless the electrician knows its characteristics, he cannot determine for certain that the equipment for which he is responsible is not causing the trouble.

MANMADE RADIO NOISE.—The principal sources of manmade radio interference in aircraft are rotating electrical machinery, switching devices, pulsed electronic equipments, transmitter spurious emission, ignition systems, propeller control systems, receiver oscillators, nonlinear elements, ac powerlines, and voltage regulators. The AE is not concerned with all these sources. Those with which he should be familiar are briefly discussed.

1. Rotating electric machines are a major source of radio interference. The types of interfering voltages generated by dc machines are:

a. Switching transients as the brush moves from one commutator bar to another. This is usually called commutation interference.

b. Random transients caused by varying contact between brush and commutator. This is usually called sliding contact interference.

c. Audiofrequency hum (commutator ripple).

d. Radiofrequency and static charges built up on the shaft and rotor assembly.

Direct-current motors used in aircraft systems are of three general types—series wound, shunt wound, and permanent magnet field. The field windings of both series- and shunt-wound motors afford some "padding" or filter action against transient voltages generated by the brushes. The permanent-magnet motor's lack of such inherent filtering makes it a very common source of interference. It must be emphasized that the size of a dc motor has little bearing upon its interference generating characteristics. The smallest motor aboard may well be the worst offender.

The output of an ideal ac generator is a pure sine wave. A pure sine-wave voltage is incapable of producing interference except at its basic frequency. However, the ideal waveform is difficult to produce, especially in small machines. Practically all types of ac power generators currently used in naval aircraft have been proven to be potential sources of interference at other than the output power frequencies. This interference may be produced by harmonics of the power frequency, caused by poor waveform; by commutation interference (series-wound motors); and by sliding contact interferences (alternators and series-wound motors). It should be noted that ac motors that do not use brushes are almost never sources of interference.

2. Switching devices make abrupt changes in electric circuits. Such changes are accompanied by transients capable of interfering with the operation of radio and electronic systems. The simple occasionally operated manual switch is of little consequence as a source of interference. Examples of frequently operated switching devices capable of appreciable or serious interference are relays, vibrators, and thyratrons.

Since relays are used almost exclusively to control large amounts of power with relatively small amounts of power, they are always potential interference sources. This is especially true when they are used to control inductive circuits. Relay actuating circuits should not be overlooked as interference sources, because even though the actuating currents are small, the inductances of the actuating coils are usually quite high. It is not unusual for the control circuit of a relay to produce more interference than the controlled circuit.

Thyratrons are gas-filled, grid-controlled, electronic switching tubes which are used for many purposes. Among the most common uses are keyer tubes in radar modulators, rectifiers in regulated power supplies, rectifiers in servosystems, and relay applications. The current in a thyratron is either all ON or all OFF; there is no in-between. Since the time required to turn a thyratron ON is only a few microseconds, current waveforms in thyratron circuits are always steep fronted. As a result, they are rich in radio interference energy.

3. Ignition systems for internal combustion engines produce pulses of energy capable of interfering with radio reception at all frequencies in current use. The physical layout of the ignition's distribution system is such as to offer a very favorable radiation system. The lengths of wire between the distributor and the plugs become very effective antennas at wavelengths shorter than about ten times the length of the lead. Further, the radial arrangement of the wires assures polarization in all planes.

Unless effective preventive action is taken, ignition systems are highly potent sources of radio interference capable of complete destruction of radio reception within their effective fields. Fortunately, the problem of ignition interference is a very old one with a long history of development, effort, and improvement. Current aircraft engine ignition systems are completely enclosed in metallic shielding harnesses. These shielding harnesses are so effective (when properly maintained) that the ignition interference problem has been reduced to a secondary problem of proper maintenance.

4. Propeller systems, whether hydraulically or electrically operated, are potent generators of radio interference. This interference may be derived from propeller pitch control motors and solenoids, governors and associated relays, synchronizers and associated relays, deicing timers, and relays for power equipment.

Propeller control equipments generate clicks and transients as often as 10 times per second. The audiofrequency envelope of commutator interference varies from about 20 to 1,000 Hz. The propeller deicing timer generates intense impulses at a maximum rate of about 4 per minute.

Values of current in the propeller systems are relatively high. The generated interference voltages are therefore severe. They are capable of producing moderate interference at frequencies below 100 kHz and above about 1 megahertz, with severe interference at frequencies that lie between these extremes.

5. A nonlinear element may be defined as a conductor or semiconductor whose resistance or impedance varies with the voltage applied across it. Nonlinear elements that may cause radio interference in aircraft, in the order of their commonness, are overdriven vacuum tubes, oxidized or corroded joints, cold solder joints, and unsound welds. In the presence of strong signals, a nonlinear element behaves as a detector or mixer, producing harmonics and sum and difference frequencies from signals applied to it.

6. Alternating-current power sources produce radio interference of a broadband

nature. In ac powered equipments, ac hum may appear at the power frequency or at the rectification ripple frequency. The recitification ripple frequency [illegible] the power frequency times the number of phases. Normally, aircraft systems utilize only single- and 3-phase sources at 400 Hz. Full-wave rectification of single-phase, 400-Hz power gives a ripple frequency of 800 Hz; a 3-phase source yields 2,400 Hz. This ripple can produce interference varying from annoyance to complete unreliability of equipment, depending on its severity and its coupling to susceptible elements.

7. Carbon-pile and transistorized voltage regulators are used in naval aircraft.

The carbon-pile is primarily used in regulation of the older ac systems. It controls the generator field resistance by magnetically varying the compression of a stack of carbon wafers. If properly adjusted, no arcing occurs and the only interference voltage generated is a result of thermal agitation within the carbon pile. It is seldom severe. This type of regulator is not a serious source of interference.

The transistorized regulator is used in modern aircraft. This regulator, having no moving parts (except the exciter control relay), creates virtually no electrical interference. The regulator senses the generated output voltage and compares it to a reference voltage. The difference is applied to a control amplifier section of the regulator as an error voltage. This error voltage is amplified and sent to the generator field circuit, causing the output voltage to return to a preset value.

Manmade radio noise is caused by electrical transients which occur during the operation of electrical or electronic equipment. In brief, manmade radio noise is generated whenever an electrical circuit is opened or closed abruptly, such as by a relay, commutator, or other make-and-break devices. A similar condition exists when large amounts of current are periodically and abruptly started and stopped, as in radar circuits. An electric spark is a generator of electrical disturbances which appear to cover the entire radiofrequency spectrum.

Suppression of Manmade Radio Noise

Suppression of radio noise has advanced to the point where the proper application of available techniques ensures that receiving equipment installed in the aircraft operates at optimum efficiency. The suppression or elimination of manmade radio noise is based on the premise that if manmade it can be man-corrected. Four types of suppression techniques are involved.

ISOLATION.—Isolation is the easiest and most practical method of radio noise suppression. Isolation revolves around the possibility of separating the source of radio noise from the input circuits of the receiving equipments affected. As every radio noise source can be considered a small transmitter, it is obvious that the radio noise source and leads carrying radio noise energy should be kept as far away from receiver antennas or lead-ins as possible. In many cases, the radio noise in a receiver may be entirely eliminated simply by moving the antenna lead-in wire just a few inches away from the source of radio noise. The value of sufficient separation between sources of radio noise and receiver input circuits is not apt to be overemphasized. The isolation method of radio noise suppression is very popular as it has the advantages of not requiring any additional material or adding any additional weight.

BONDING.—Bonding is a very necessary means of radio noise control. It provides grounding of all insulated conducting objects to the structure of the aircraft. When conducting objects are not grounded, flight through precipitative weather conditions causes high-voltage charges to build up on those objects. Repeatedly, the voltage becomes high enough to spark over to an adjacent ground member, or the object discharges to the surrounding air by corona conduction. Either mode of discharge causes considerable radio noise.

Other important functions of bonding are to protect the aircraft and personnel from lightning discharges by equalization of potentials produced which might cause arcs and sparks in the aircraft structure, to provide a homogeneous counterpoise for radio transmission and reception, to provide power current return paths, and to provide a short path for bypassing RF noise. All electronic equipments should be grounded to the aircraft structure. This may be accomplished by using short bond straps or by sheets of high conductivity (copper or aluminum) metal where it is impossible to use a short bond strap.

All bonding jumpers must be kept as short and direct as possible. When practicable, these jumpers are not to exceed 3 inches in length. The use of two or more standard length jumpers in series to make up the necessary length is not allowed without approval from the proper authority. (Additional information can be found in NAVAIR 01-1A-505.)

SHIELDING.—Shielding is one of the most effective methods of suppressing radio noise. The primary object in shielding is to electrically "bottle up" the radio frequency noise energy. In practical applications, this means that the radio noise energy must be kept flowing along the inner surface of the shield. The use of good shielding is particularly effective in situations where filters cannot be used, or where the filters are not particularly effective when they are used. A good example of this is where radio noise energy radiates from a radio noise source and the radiated energy is picked up by the various circuits that eventually connect to the receiver input circuits. It is obvious that it would be impractical to filter a number of leads or units that are influenced by the radio noise energy; hence, the application of effective shielding at the noise source itself is advisable for it eliminates the radiated portion of the radio noise energy by confining it within the shield at its source.

FILTERING.—Radio interference as radiated or conducted from a source may be of a single frequency or may cover an extended band of frequencies. When bonding, shielding, or isolation of the source proves ineffective as a means of reducing radio interference, it becomes necessary to employ filters to accomplish this reduction. A filter is defined as "a selective network which transmits freely electric waves having frequencies within one or more frequency bands and which attenuates substantially electric waves having other frequencies." The size of a filter may vary widely, depending on the voltage and current requirements as well as the degree of attenuation desired. Filters are usually incorporated in equipment known to generate radio interference, but these filters are often inadequate, and in many cases it is necessary to add external filters to these equipments. This is especially true if the source of interference is coupling interference to paths of entry to a receiver other than the powerline.

The types of filters used in the reduction of radio interference vary with the application, but each of the general filter types may be found to be particularly adaptable to some specific situation. Most of the electrical devices connected to powerlines have features required for their operation which are conducive to the generation of radio interference. The interference generated by these devices, unless properly attenuated, is impressed upon the powerlines and conducted to the receivers. It may also be conducted into the receivers by inductive coupling to other wiring associated with the receivers. This interference, unless attenuated by means of filters, is then transmitted along these powerlines, entering the receivers at the powerline input; or this interference may be radiated somewhere along the powerlines and enter the receiver by means of the antenna system.

Filters are of four kinds and are defined as follows:

Low-pass filter, which introduces negligible attenuation at all frequencies below a certain frequency, called the cutoff frequency, and relatively high attenuation at all higher frequencies.

High-pass filter, which introduces negligible attenuation at all frequencies above a certain frequency, called the cutoff frequency, and relatively high attenuation at all lower frequencies.

Bandpass filter, which introduces negligible attenuation at all frequencies within the range between two frequencies, and relatively high attenuation at all other frequencies.

Band-elimination filter, which introduces negligible attenuation at all frequencies outside a certain range, and relatively high attenuation at all frequencies inside that range. (NOTE: For information that covers the theory of operation of these filters refer to *Basic Electronics,* NAVPERS 10087 (Series)).

The normal characteristics of a filter are obtained only when the filter is properly terminated in its characteristic impedance.

A wave trap is a filter or network especially designed to reject certain frequencies, or bands or frequencies. Networks of this type may be installed at the antenna of the transmitter or receiver in order to attenuate frequencies outside of the assigned frequency range of the equipment. All such networks must have low insertion, loss, or attenuation, for the pass frequencies. In the design and construction of wave traps, the insertion loss is usually below 2 db.

There are two basic circuit configurations for filter networks, the pi-section and the T-section. Each may be broken down into half sections which have an inverted L-shape and are known as L-section filters. If a number of pi- or T-sections are connected in series to form a filter, the resultant network is called a ladder network. Any of the above circuit configurations may be used for radio interference elimination.

In general, the use of simple capacitor filters is to be preferred over that of the more complicated network filters in cases where this type of filter provides the required degree of radio interference attenuation. In this method, the radio noise energy passes through the capacitor to ground and then back to its source. This short-circuiting effect is due to the fact that the capacitor offers a very low impedance path across the noise source terminals.

A given capacitor is effective in bypassing only a limited range of radio interference frequencies because of its internal inductance and the inductance of the connecting leads. The inductance of the capacitor depends upon its capacity, the material of which it is fabricated, and the length of the connecting leads. The capacitor leads are the major contributors to the inductance of capacitors. For these reasons, small mica capacitors with short leads are more effective as RF filters at high frequencies than large paper capacitors with normally long leads. Electrolytic capacitors should never be used as RF filters because of the danger of dielectric breakdown.

The popularity of the capacitor type filter is due to the fact that the current used for operation of the radio noise source does not have to pass through the filter. The only energy passing through the filter is the radio noise energy. The most important limiting factor in the choice of a capacitor type filter is the breakdown voltage rating of the capacitor. It must be well above the voltage used to operate the source of radio noise to be filtered. For example, where a 24-volt source of noise is to be bypassed with a capacitor, the working voltage of the capacitor should be at least 50 volts.

CHAPTER 10

TEST EQUIPMENT

In previous chapters of this manual certain maintenance practices, equipment, and systems have been discussed. This chapter supplements the chapter on ground support equipment in *Aviation Electrician's Mate 3 & 2,* NAVEDTRA 10348 (Series) in discussing test equipment used to maintain avionics systems. The chapter in the 3 & 2 manual covers a good all-around selection of aircraft support equipment used both at organizational and intermediate levels of maintenance.

New aircraft just coming into the fleet, such as the S-3 and F-14, are designed so that their avionics components can be tested by an aircraft installed internal computer. A test program may be initiated by the electrician from a test panel in the cockpit or electronic bay. A complete self test of the system will be performed, and discrepancies can be identified by indicator lights, measuring instruments, or by displays. Through the use of troubleshooting charts in the Maintenance Instructions Manuals, malfunctions can be isolated to a particular component.

The malfunctioning component is then sent to the intermediate maintenance activity through the supply system, where it is put on a test bench. All new avionics equipment must be designed to be compatible with the Versatile Avionics Shop Test Equipment (VAST). VAST is discussed in *Aviation Electrician's Mate 3 & 2,* NAVEDTRA 10348 (Series), and will not be discussed in this manual. One important feature of VAST, however, is that new programs are being written so that versatility is expanded to include new equipment plus components and systems from older aircraft. Thus, a majority of the older types of test equipment designed to be used for a particular component or system at the intermediate level of maintenance are being slowly phased out.

PURPOSES OF TEST EQUIPMENT

General purpose test sets are those items of test equipment used in the performance of a specific type of test on a variety of electricial equipment. In general, these sets include such items as meters, signal generators, oscilloscopes, vacuum tube and semiconductor testers, etc. Each of these types is available in a number of models; each with its own set of applications and limitations. One or more models of each basic type are normally available in each maintenance shop. The particular models available in a given shop are governed by the equipment to be supported.

Special purpose test sets are those items of test equipment used in the performance of a variety of tests on a specific type of electrical equipment.

MEASURING INSTRUMENTS

The term "measuring instruments," as used in this discussion, includes only that class of test equipment which measures the basic parameters of electrical equipment. The basic parameters are voltage, current, resistance, power, and frequency.

Several of the measuring instruments commonly used by the Aviation Electrician's Mate are discussed in publications listed in the *Bibliography for Advancement Study,* NAVEDTRA 10052 (Series). For instance, such basic measuring instruments as voltmeters, ohmmeters, ammeters, meggers, wattmeters, frequency meters, and power factor meters are discussed in *Basic Electricity*, NAVPERS 10086 (Series). Transistor testers, tube testers, oscilloscopes, and signal generators are discussed in *Basic Electronics*, NAVPERS 10087 (Series), Volumes I and II.

Electronic meters discussed in this chapter are the phase angle voltmeter, the differential voltmeter, and the digital multimeter. A new measurement concept called time-domain reflectometry is also discussed in this section.

PHASE ANGLE VOLTMETER

The overall accuracy of many electronic components is determined by measuring phase angles in computing transformers, computing amplifiers, and resolver systems. In the past, one of the most common methods used for measuring phase shift or phase angles between signals was observing patterns on an oscilloscope. With this method, it was hard to determine small angles, and difficult to translate various points into angles and sines of angles. The most limiting factor in using oscilloscope patterns developed when one of the signals contained harmonic distortion or noise.

In any complex waveform containing a fundamental frequency and harmonics, measuring phase shifts presents problems. In most applications, interest lies in the phase relationship of the fundamental frequencies, regardless of any harmonics which may be present. One of the requirements of a phase measuring device is to measure the phase difference between two discrete frequencies, regardless of the phase and amplitude of other components of the waveform.

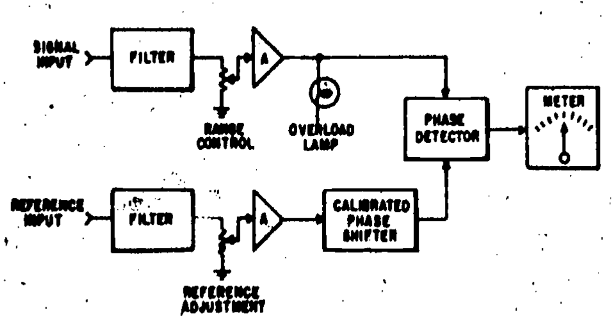

208.231

Figure 10-1.—Phase angle voltmeter, block diagram.

The basic block diagram of a phase angle voltmeter is shown in figure 10-1. There are two inputs—the signal and the reference. Both channels contain filters which pass only the fundamental frequency. Harmonics are highly attenuated. Each channel has a variable amplitude control and amplifiers to increase the variety of signals that can be checked.

A calibrated phase shifter is inserted into the reference channel; that channel signal can be phase shifted to correspond to the other channel. This is detected in the phase detector and observed on the meter.

The calibrated phase shifter is made up of a switch (whose position corresponds to the 0°, 90°, 180°, and 270°, phase shift) and a potentiometer (whose dial is calibrated from 0° to 90°). The total phase shift is made up of the sum of the two readings.

The phase detector is a balanced diode bridge type demodulator. Its output is proportional to the signal amplitude times the cosine of the angle of phase difference between the signal input and the reference input.

If the reference input is phase shifted until it is in phase or 180° out of phase with the signal input, the output from the phase detector is proportional to the signal input amplitude (the cosine of the angle is unity). If the reference input is phase shifted until it is 90° out of phase with the signal input, the phase detector output is zero (the cosine of the angle is zero).

The point at which the two signals are in phase or 180° out of phase is the point of maximum deflection on the meter. The difference between the in-phase and the 180° out-of-phase points is in the direction in which the needle swings—not the distance it swings. As the point of maximum deflection is approached, the rate of change of the meter reading decreases because the cosine has a small rate of change near 0°. This makes it difficult to read the exact point of maximum deflection.

Because the cosine has a maximum rate of change as it approaches 90° (and thus gives a better indication on the meter), most commercial voltmeters are set to determine the point at which the signals are 90° out of phase—"quadrature." When the voltmeter is set for this point, there must be some way of converting the phase shifter reading so that it shows the correct amount of phase shift rather than 90° more or less than the actual amount. Some confusion exists in this area because different manufacturers have different methods of determining the signal quadrant. Manufacturers also differ on whether the final reading is a leading or a lagging phase shift. This means the electrician must be familiar with as many types of phase angle voltmeters as the Navy has in the field. He cannot assume that the method he uses to determine phase angle on one type of meter can be used on another; nor can he assume that, because one meter gives him a leading angle between signal and reference waveforms, another manufacturer's meter also gives leading phase shift.

DIFFERENTIAL VOLTMETER

The differential voltmeter is a reliable precision item of test equipment. Its general function is to compare an unknown voltage with an internal reference voltage, and to indicate the difference in their values. The differential voltmeter in most common use in Navy applications is the 803D/AD (fig. 10-2), manufactured by the John Fluke Co. The remaining portion of this discussion is based on that instrument.

The 803D/AD can be used as an electronic voltmeter, as a precision potentiometer, and as a megohmmeter. It can also be used to measure the excursions of a voltage about a reference value. Ease of operation, inherent protection from any accidental overload, and high reliability of readings are additional advantages of the instrument. It is accurate enough for precision work in calibration laboratories, yet rugged enough for general shop use.

The heart of the unit is a precision 500-volt dc reference power supply. This 500 volts can be precisely divided into increments as small as 10 microvolts by means of 5 voltage dials. Unknown ac or dc voltages are matched against the precise internal voltage until no deflection occurs on the panel meter. The unknown voltage is then simply read from the voltage dials. In the highest null sensitivity range, a potential difference between unknown and reference voltage as small as 0.01 volt causes full scale meter deflection.

At null, the differential voltmeter presents an "infinite" input impedance to the voltage under measurement, almost completely eliminating circuit loading.

A functional schematic diagram of the differential voltmeter is shown in figure 10-3. The principal circuit divisions are as follows:

1. A 500-volt dc reference power supply.
2. Precision voltage divider network.
3. VTVM.
4. Chopper-amplifier.
5. Converter and converter power supply.

The system circuitry is designed with two separate common returns. One of these, the return for the converter power supply and reference power supply, provides a safety factor for personnel and a capability for measuring a potential difference between two voltages. The other, which is the common return of the VTVM power supply, is connected to the known reference voltage output from the precision voltage divider network. This arrangement provides a constant dc voltage of +108 volts across the differential amplifier regardless of the dc potential applied to the grid.

DC Reference Power Supply

A full wave rectifier with its associated filter network supplies a dc voltage of approximately 1,000 volts to a conventional electron controlled voltage regulator. The regulated output is maintained at 500 volts ±0.01 percent.

In the 500 VDC position, the RANGE switch (S2E) passes this 500 volts directly to the precision voltage divider. In the 50 VDC, 5 VDC, and 0.5 VDC positions, range resistors controlled by S2F divide the reference voltage to 50, 5, and 0.5 volts dc, respectively. In all ac positions of the RANGE switch, only 5 volts of the reference supply is used, due to the fact that the maximum output of the ac to dc converter is 5 volts.

208.232

Figure 10-2.—Differential voltmeter, Model 803D/AD.

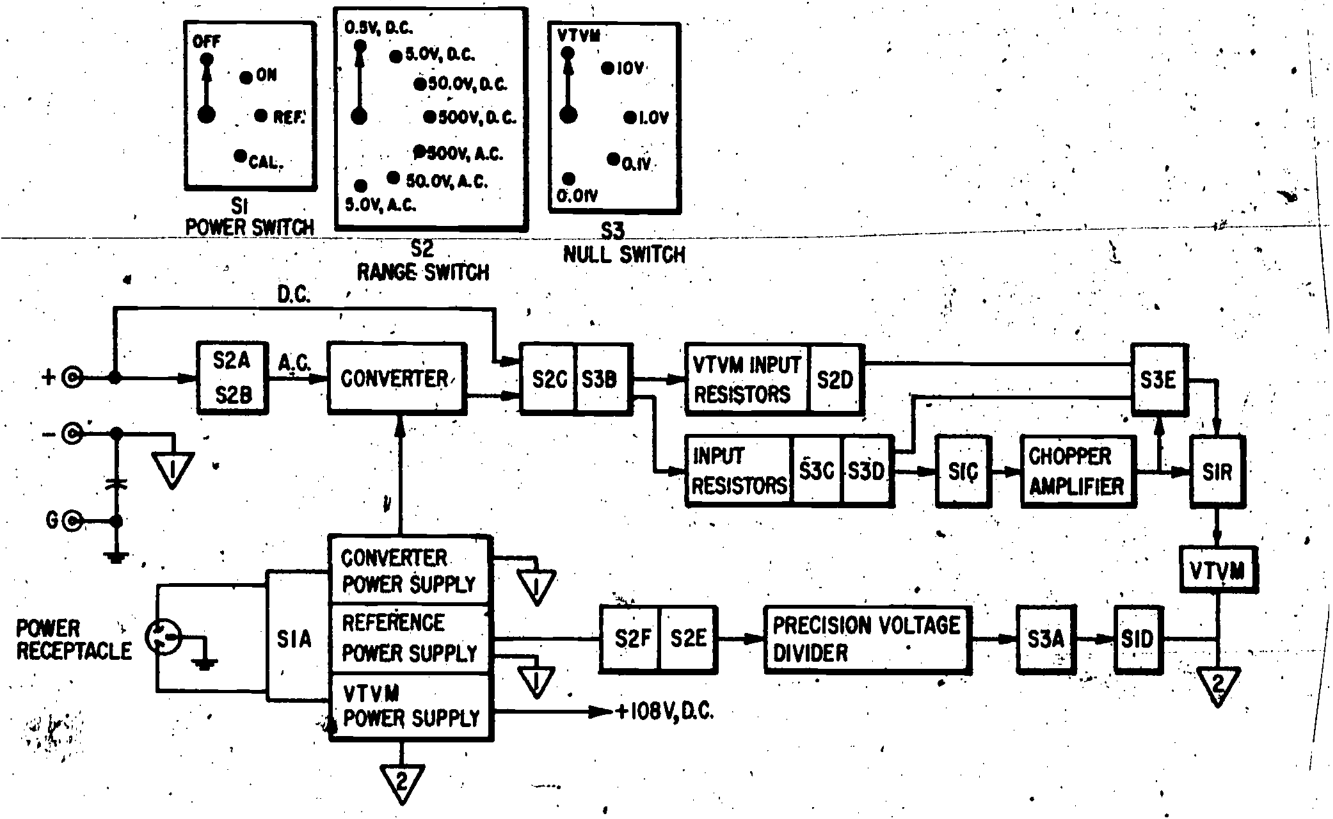

208.233

Figure 10-3.—Differential voltmeter, functional schematic diagram.

Precision Voltage Divider

Each of the four precision voltages available from the reference supply must be made adjustable through a precision divider string so that unknown voltages may be nulled or matched exactly. The five decade resistor strings (fig. 10-4) accomplish this function.

The decade resistors are precision resistors connected in series parallel. The 500 vdc reference voltage is applied through the range switch on the front panel to the highest digit of the decade counter. In the 500 vdc range, S4 establishes the 100's volt reference, S5 the 10's volt reference, S6 the units volt reference, S7 the tenths (.1) volt reference, and S8 the hundreths (.01) volt reference. The values are reduced by a factor of 10 for each successive decade resistor. S4 is labeled "A" on the front panel (fig. 10-2), S5 is "B", S6 is "C", etc.

Voltage is dropped through the decade resistors so that the voltage remaining at the output of S8 corresponds to the voltage dialed in on the front panel. When the range switch is moved to different range positions, lights on the front panel illuminate to fix a decimal point between the decades. When the range switch is placed in the 500 volt range, 500 vdc is applied to S4 and the decimal point appears between decades "C" and "D". When the 50 volt range is selected, 50 volts is applied to S4 and the decimal point appears between decades "B" and "C"

All resistors of each decade are matched and all decades are matched for each instrument, providing an overall divider accuracy of 0.005 percent.

With the NULL switch in any null range, the output of the precision voltage divider appears at the grid of one-half of the VTVM differential

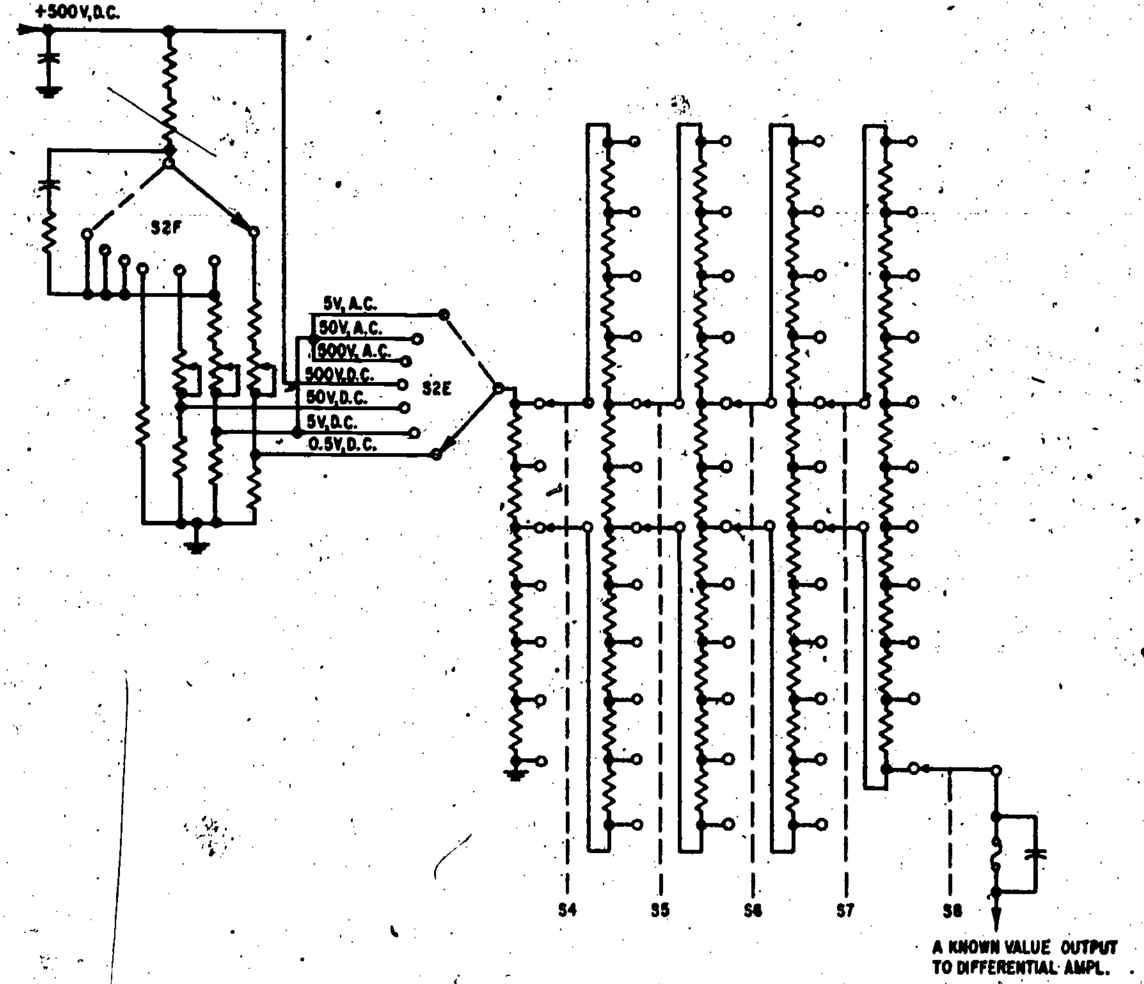

208.234

Figure 10-4.—Precision voltage divider.

amplifier. A one two-hundredths ampere (5 milliampere) fuse protects this output.

Vacuum Tube Voltmeter

When operating in the differential mode, output voltage from the precision voltage divider appears on the grid of V4B, one-half of the differential amplifier. (See fig. 10-5.) The unknown voltage appears on the grid of V4A, the other half of the differential amplifier. Any difference between these potentials is indicated by the meter coupled between the cathodes of V4A and V4B. When the output voltage exactly matches the unknown, the meter reads zero and no current is drawn from the source being measured, because the same potential exists on both sides of the input resistances.

When used as a conventional VTVM, the grid of V4B is connected to the 0-volt bus, or negative binding post. When the range switch in the 0.5 VDC position, the unknown voltage appears directly on the grid of V4A and the meter indicates the approximate value of the unknown. Input divider resistors maintain the 0 to 0.5 grid voltage range for all instrument voltage ranges. The input resistance of the instrument in the VTVM position is 10 megohms.

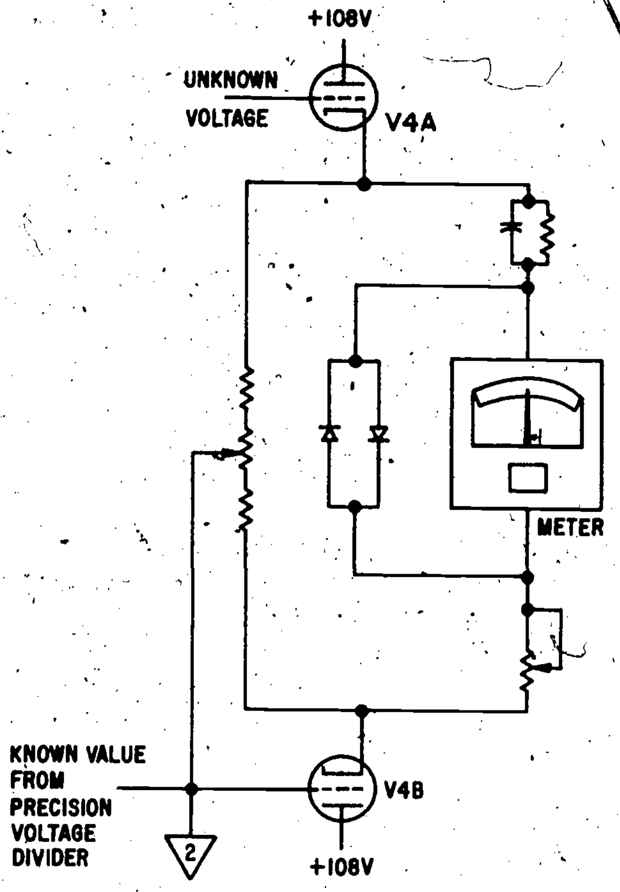

208.235

Figure 10-5.—Differential amplifier.

Converter

All ac measurements are made by first converting the ac input to a dc voltage. The converter provides a maximum dc output of 5 volts for a maximum ac input of 5 volts rms. In the 5 VAC position, range switch sections of S2A and S2B couple the converter amplifier input directly to the binding post. In the 50 VAC and 500 VAC positions, input attentuators reduce the unknown ac to provide a maximum of 5 volts ac input to the first converter amplifier.

The overall frequency response of the converter is essentially flat from 30 Hz to 10 kHz.

DIGITAL MULTIMETER

The digital multimeter is a highly accurate and reliable measuring instrument that is generally used at the intermediate or depot levels of maintenance. The instrument is desirable for use at these levels because it is easy to use and read. Even though some digital multimeters are provided with a battery pack for portable operation, they are not normally used at the organizational level of maintenance because they are so fragile.

The Fluke Model 8100A (fig. 10-6) is representative of digital multimeters presently used in the fleet. It is a small compact unit weighing only 10 pounds, including the optional battery pack. It is capable of measuring ac and dc voltages to a maximum of 1,000 volts and resistance to 10 Meg ohm. Standard features of the Model 8100A include protection against overvoltages, a selectable input filter, autopolarity, pushbutton function and range selection, and a full four-digit readout plus a "1" in a fifth digit to indicate overranging. The unit will operate from line voltages of either 115 or 230 volts at frequencies from 50 to 500 Hz. An optional rechargeable nickle-cadmium battery pack can power the unit for eight continuous hours. Accessories and options besides the rechargeable battery pack are a high frequency probe, a high voltage probe, and switched ac/dc current shunts.

DC Volts Section

The dc volts measurement section has four range switches for ±1, ±10, ±100, or ±1,000 volts with an accuracy of 0.01% of the range selected. On the 1 volt range, voltages are as low as 100μv can be measured. A sensing circuit will detect the polarity of the voltage on the HI terminal and display the polarity to the left of the overrun indicator. A maximum of 1,200 volts may be applied to the unit in any range and of either positive or negative polarity without damage to the meter. When a voltage larger than the range selected is applied to the unit the digits will indicate 11999 with the decimal point positioned according to the range. The input resistance is a constant 10 Meg ohm regardless of the range selected. An internal filter may be switched inline with the input to the unit to

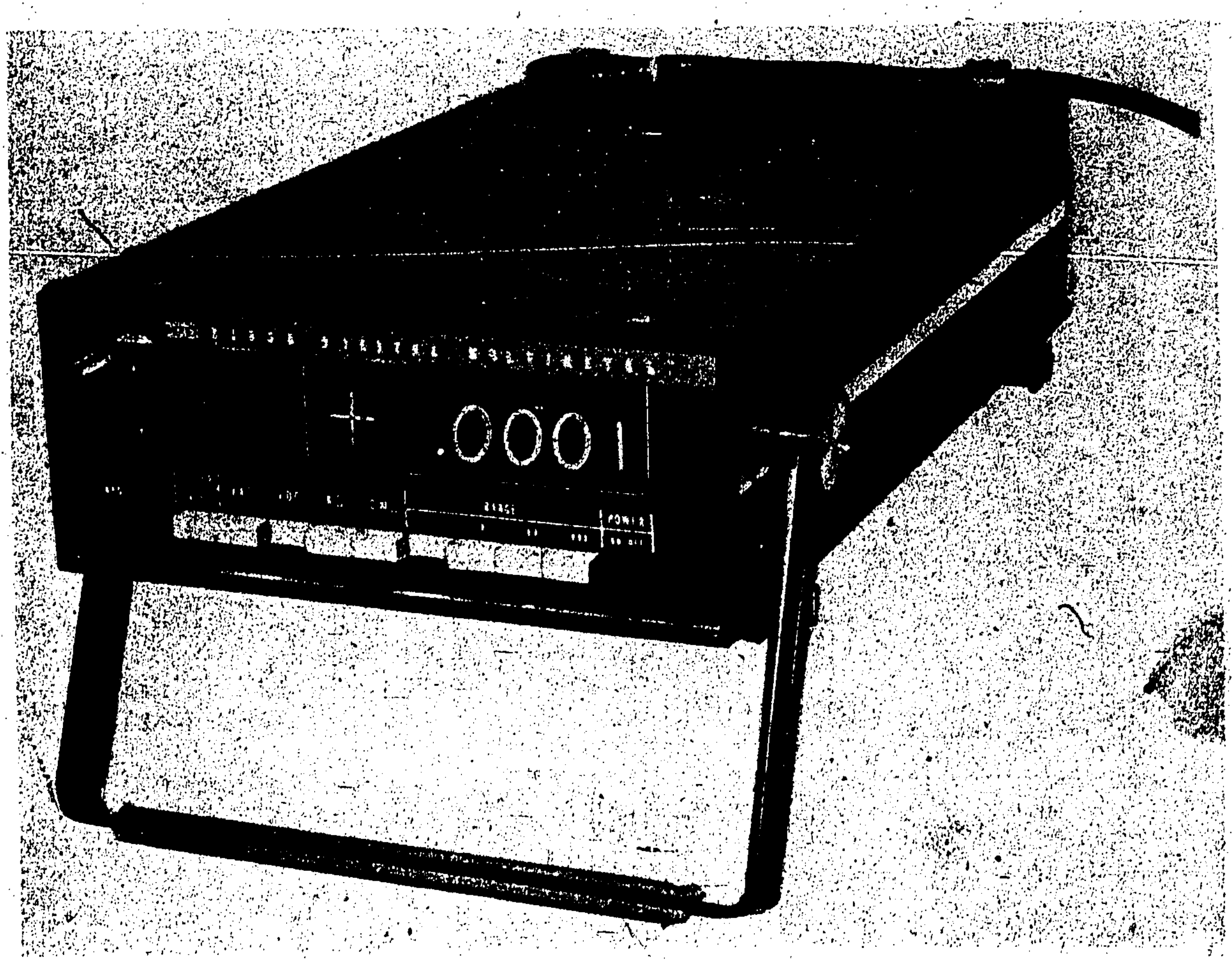

208.282

Figure 10-6.—Digital multimeter.

provide a more accurate reading; however, when this is done it will take slightly longer to indicate the measured voltage.

AC Volts Section

The parameters of the ac volts section are essentially the same as the dc section. It will measure values between 100μv and 1,000 volts, but has an overload capability up to 1,700 volts peak value at a frequency between 30 Hz and 20 kHz. Accuracy can be expected up to 0.05% of voltages with a frequency between 50 Hz and 10 kHz, and 0.1% accuracy at frequencies between 30 Hz to 40 Hz, and 10 kHz to 20 kHz. The input impedance is one megohm shunted by less than 30 pf.

Resistance Section

The resistance section is capable of measuring between 0.1 ohm to 10 Meg ohms with an overrange capability of 20% of any range. Accuracy is to within 0.01% of the selected range. The resistance section has an internal voltage source that produces variable voltages at the input terminals equal to 1 volt at full range resistance: i.e., if in the 1K ohms range you are measuring a 1,000 ohm resistor, the input terminals will have 1 volt impressed on them; if the range is 10K [illegible] and a 10,000 ohm resistor is measured, the input terminals will have 1 volt impressed; if on the 10K ohms range and the resistor is 12,000 ohms, the input terminals will have 1.2 volts impressed. A maximum of 9 volts is impressed when the terminals are open. The resistance scale also has an overload protection feature that protects the internal circuits up to 130 vrms in the 1K ohms range and up to 230 vrms in the ranges between 10K ohms and 10 Meg ohms.

TIME-DOMAIN REFLECTOMETRY

Time-domain reflectometry (TDR) is a measurement concept beginning to be widely used in the analysis of wideband systems. The art of determining the characteristics of electrical lines by observation of reflected waveforms is not new. For many years power-transmission engineers have located discontinuities in power-transmission systems by sending out a pulse and monitoring the reflections. Discontinuity is defined as any abnormal resistance or impedance that interferes with normal signal flow.

TDR is particularly useful in analyzing coaxial cables such as those used in fuel or oxygen quantity systems. The amplitude of the reflected signal corresponds directly to the impedance of the discontinuity, and the distance to the discontinuity can be determined by measuring the time required for the pulse to travel down the line to the reflecting impedance and back to the monitoring oscilloscope.

The TDR analysis consists of the insertion of a step or pulse of energy into a system and the subsequent observation, at the point of insertion, of the energy reflected by the system.

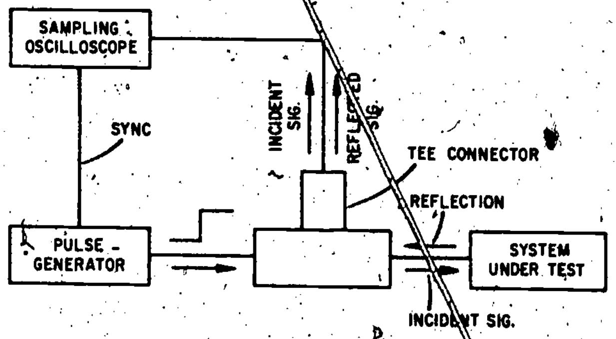

229.21

Figure 10-7.—Typical time domain reflectometer.

Several arrangements are possible, but the following procedure is used with the newer, specialized reflectometers. (See fig. 10-7.) A fast (or incident) step is developed in the pulse generator. This step then passes through a TEE connector and is sent into the system under test. The sampling oscilloscope is also attached to the TEE connector, and the incident step, along with the reflected waveform, are displayed on the CRT. Analysis of the magnitude, duration, and shape of the reflected waveform indicates the type of impedance variation in the system under test.

Resistive Loads

If a pure resistive load is placed on the output of the reflectometer and a step signal applied, a signal whose amplitude is a function of the resistance (fig. 10-8) is observed on the CRT. If the line is terminated in its characteristic impedance (Z_O) as shown in figure 10-8, there will be no reflected signal and the signal observed on the CRT will remain flat; but if the impedance (R_L) at the termination is greater or less than Z_O, then reflections (standing waves) will exist. The amplitude of the reflected signal is proportional to the value of R_L. If R_L is greater than Z_O, the reflected signal will be in phase with the incident signal, and when applied to the CRT, it will add to the incident signal. If R_L is less than Z_O, the reflection will be 180° out of phase with the incident signal, and when applied to the CRT

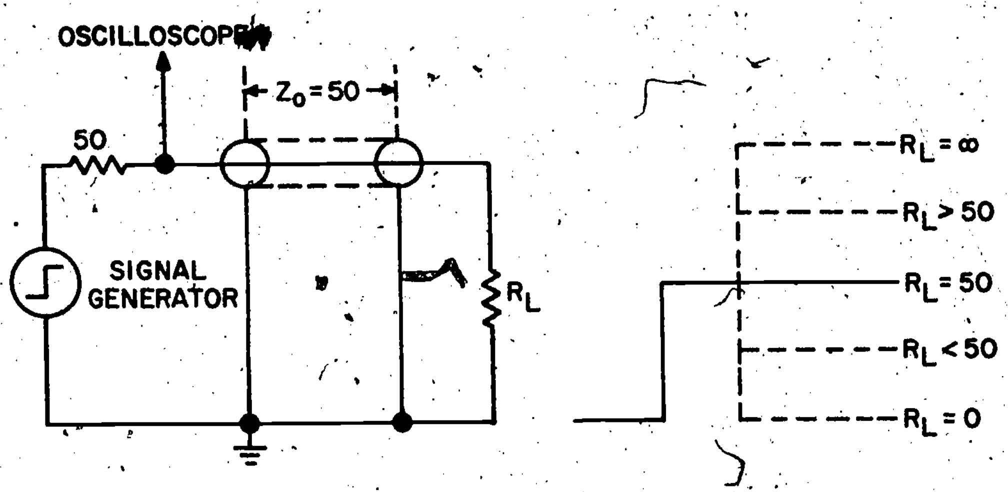

Figure 10-8.—Step signal-height variations resulting from different resistive loads.

will subtract from the incident signal. The dotted lines in figure 10-8 represent the composite signal (incident plus the reflected) observed on the oscilloscope. The time from the start of the step to the reflection represents twice the distance to the discontinuity. This is the time it takes the step to travel down the line to the discontinuity and return.

It is good practice to separate the system under test from the TDR unit's tee connector by at least 8 inches of 50-ohm cable. Such a separation moves the reflections away from the leading edge of the step, so that overshoot and ringing are not superimposed on the observed signal.

Reactive Loads

The waveform of reactive loads (fig. 10-9) depends upon the time constant formed by the load and the 50-ohm source. The series RL network in (A) of figure 10-9 appears as an open the instant the step voltage reaches it because the inductor L offers maximum impedance to the change in current caused by the step voltage. Therefore, the reflected signal is in phase with the step voltage and is additive. This explains the sharp rise in voltage. However, as soon as the inductor saturates, the only opposition to current is resistor R; and since L saturates at a nonlinear rate, the voltage drops at a nonlinear rate from the peak of the spike to the same level as the flat portion of the step voltage. At this time the only load seen by the line is the 50-ohm resistor which is equal to the characteristic impedance of the line, and the reflections cease until the next step appears at the termination and the cycle repeats itself.

The waveshape in figure 10-9 (B) can be understood by remembering that L appears as an open to the fast rising step voltage the instant it is felt at the termination; but as the inductor saturates, it offers less and less opposition to current until it is completely saturated (0 ohm). Since the inductor is parallel to R, the termination is a short and the reflected wave is 180° out of phase with the incident wave. Since L saturates at a nonlinear rate, the voltage declines at a nonlinear rate. A similar analysis can be made of the transmission lines with the RC terminations shown in (C) and (D) of figure 10-9.

The analysis just made of the different types of discontinuities explains the usefulness of TDR. Not only can a discontinuity be determined, but through proper analysis you can determine whether it is resistive, inductive, or capacitive, and whether the reactance is in series or parallel with the load.

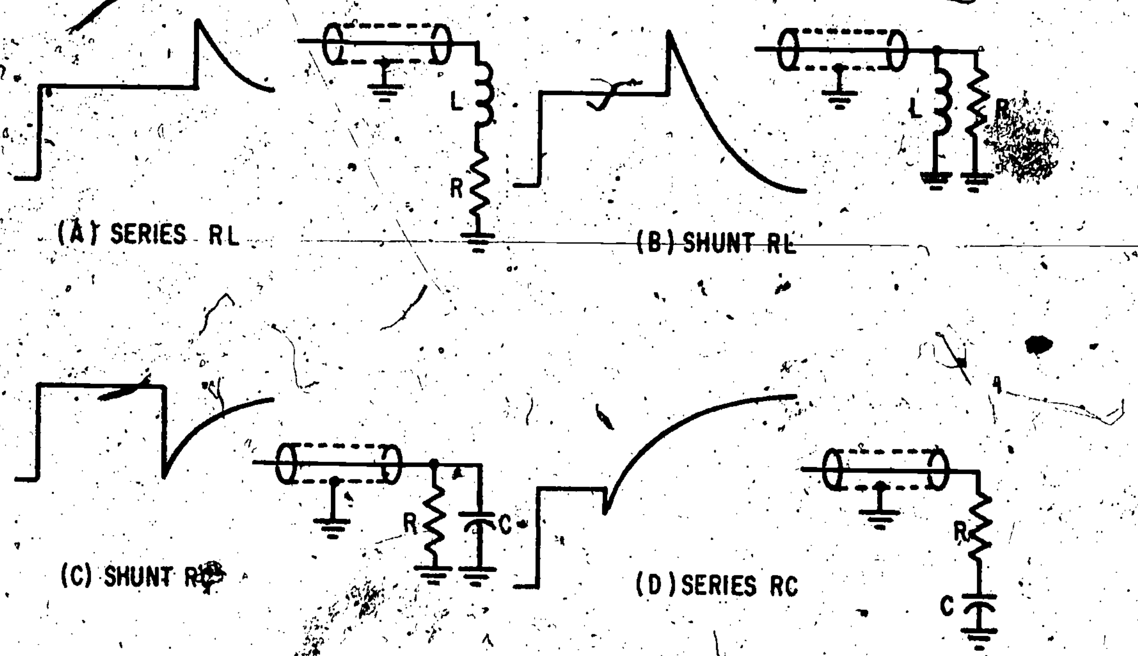

229.23

Figure 10-9.—TDR reactive load characteristics (time constant = 1).

TEST SETS

The purpose of this section is to discuss some of the test equipment commonly used in the fleet. The discussion devoted to each piece of test equipment is necessarily brief and is not intended to provide complete operational or maintenance data. That type of information can be found in the Maintenance Instructions Manual for the aircraft, or the operator's manual for the test equipment. One of the best tools for troubleshooting aircraft systems, however, is a thorough knowledge of the system to be tested. Troubleshooting charts may provide solutions for several test set indications, yet, there are always some indications that can be confusing unless you are familiar with the operation of the system under test and of the purpose and circuitry of the test set.

SYNCHRO ALIGNMENT SET TS-714/U

Synchro Alignment Set TS-714/U (fig. 10-10) is a portable test set used to check the alignment of synchros or resolvers. It can be used to align any 400 Hz synchro or resolver. In addition to its higher sensitivity, the test set has an additional advantage over other methods in that the test set can also supply excitation voltage for the synchro or resolver being aligned.

The test set basically consists of a bandpass amplifier and power supply, a synchro or resolver excitation supply with outputs from 3 to 115 volts rms (1, fig. 10-10) and switching circuits. The output voltages from the synchros or resolvers are applied to the amplifier, the output of which is fed to a phase sensitive detector circuit. The detector's output is metered by the microammeter (2). A meter switch (3) selects the meter sensitivity from 300 volts full scale to 0.1 volt full scale, plus a calibrate and off position.

The meter has a ZERO center scale and indicates 0 when the synchro or resolver is adjusted to either of its two nulls. The synchro or resolver is adjusted to a null position with the function switch (4) in the ZERO position. When the null is reached, the function switch is switched to the POL position and note is taken

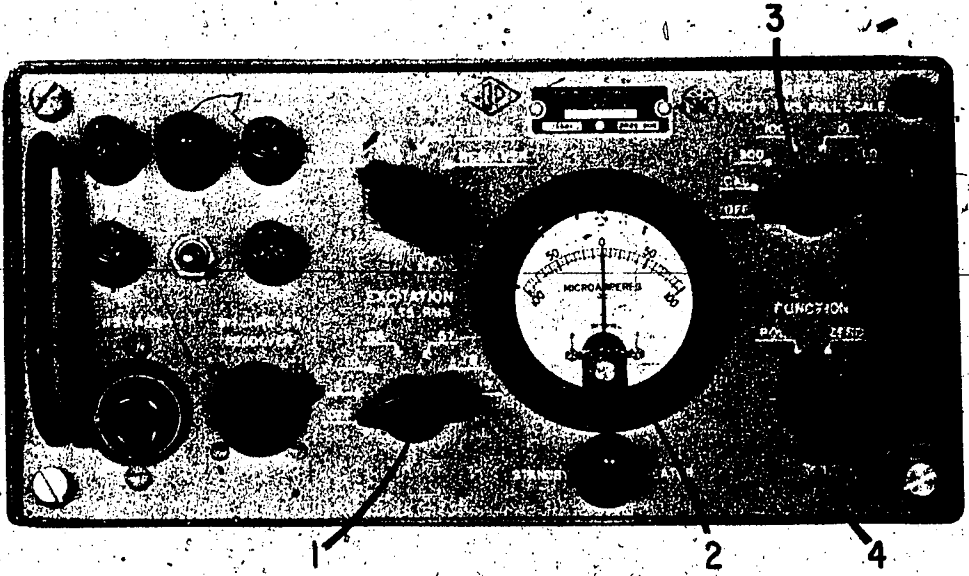

1. Excitation switch.
2. Microammeter.
3. Meter sensitivity switch.
4. Function switch.

208.251

Figure 10-10.—Synchro Alignment Set TS-714/U front panel.

of the meter reading. Then the function switch is returned to ZERO position and the synchro is rotated 180° to its opposite null. When the opposite null is reached, the function switch is again switched to the POL position and a note made of the reading. The correct null will be the one indicating the lower reading with the function switch in the POL position. When the synchro is adjusted to this null, it is electrically zeroed with the correct polarity.

For detailed instructions on the use of the TS-714/U, consult *Operation and Service Instruction Manaul,* NA 11-70-FAG-510.

VARIABLE ENGINE AIR DUCT RAMP CONTROL SYSTEM TESTER AN/PSM-19

This tester is utilized for functional and maintenance testing of variable engine air duct ramp control systems.

The tester (fig. 10-11) is a portable unit and consists of a plug-in panel housed in an

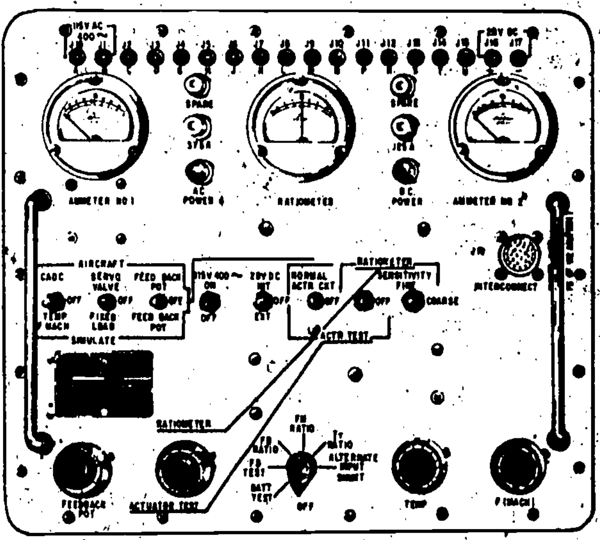

208.256

Figure 10-11.—Ramp control system tester.

aluminum carrying case. The lid is detachable and has provisions for cable and accessory storage. The lid also contains a schematic diagram as well as a switch position table.

The test set is designed to be inserted into the aircraft variable inlet duct ramp control circuit. It serves as an aid during installation and in the calibration of the system to the ramp position. It also serves as an aid in the calibration of the Central Air Data Computer (CADC) output. The test set is designed to be used as an aid in troubleshooting the aircraft variable inlet duct ramp system. Should a component failure occur, the test set can be used to locate the defective component. The test set is designed for insertion in series with the ramp control system amplifier and associated aircraft wiring.

The tester contains three instruments—a ratiometer and two ammeters. The ratiometer is used in conjunction with a dial switch to read the various outputs from the system under test. The ammeters monitor the differential current across the actuator servo valves to indicate the unbalanced condition necessary to cause actuator ram motion and to read the unbalanced current during a null condition of the system under test.

The rotary selector switch, located at the lower center portion of the panel, has seven positions including an OFF position. The function of this switch is to select various outputs from the aircraft inlet duct ramp control system so they may be read on the ratiometer. The positions are as follows:

1. The BAT TEST position checks the output current from the ratiometer by utilizing the self-contained 6-volt battery.
2. The FB TEST (feedback test) position is used to check the feedback potentiometer total resistance.
3. The FB RATIO (feedback ratio) position checks the feedback potentiometer ratio for any given variable inlet duct ramp position.
4. The F_M RATIO (F Mach ratio) position checks the F (Mach) potentiometer output from the aircraft's CADC system.
5. The T_T RATIO (temperature ratio) position is used to check the total temperature potentiometer output from the aircraft CADC.
6. The ALTERNATE INPUT SHUNT position checks the ramp control amplifier input shunt resistors.

The panel contains eight toggle switches which perform the following functions:

1. The CADC BRIDGE, TEMP F MACH—In the aircraft position, allows normal operation of the CADC bridge for calibration of the system. In the simulate position, simulates temperature on F (Mach) inputs to the CADC.
2. SERVO VALVE, FIXED LOAD—In the aircraft position, allows normal operation of the ramp actuator servo valve for calibration of the system. In the simulate position, simulates servo-valve load for bench testing such as presetting of the system's amplifier prior to installation in the aircraft.
3. FEEDBACK POT—In the aircraft position, allows normal operation of the feedback potentiometer for calibration of the system. In the simulate position, simulates feedback potentiometer for bench test purposes.
4. The 115 V 400 HERTZ.—Used to connect 115-volt, 400-Hz, single-phase power to the system during aircraft checks or calibration. It is also used to apply an external source of power for bench tests or presetting the system amplifier.
5. 28 VDC—Is used to select internal battery or external 28-volt dc when used.
6. NORMAL ACTR CKT, ACTR TEST—In the normal position, allows normal operation of the servo valve for ramp calibration. In the ACTR TEST position, checks actuator operation with a simulated CADC input to the servo valve to isolate any malfunction of the servo valve or actuator.
7. RATIOMETER, ACTR TEST—In the ratiometer position, selects the ratiometer readout of the system outputs. It is also used to operate the actuator when the NORMAL ACTR CKT, switch is in the ACTR TEST position, for isolating a malfunction of the actuator or servo valve.
8. RATIOMETER SENSITIVITY FINE, COARSE—In the COARSE position, keeps from pegging the ratiometer and makes the zero adjustment of the ratiometer. In the FINE

position, it adjusts the ratiometer to the zero position for a more accurate reading.

Four dial type switches are also included and perform the following functions:

1. FEEDBACK POT–Is used to simulate the aircraft feedback potentiometer for bench testing of the system's amplifier.
2. RATIOMETER ACTR TEST–Used in conjunction with the ratiometer to read the aircraft's outputs in resistance ratio or to operate the actuators separately to isolate a malfunction.
3. TEMP–Used to simulate temperature outputs from the CADC bridge for calibration or to simulate temperature input signals to the amplifier for bench testing or presetting.
4. F (MACH)–Used to simulate F (Mach) outputs from the aircraft's CADC bridge for calibration, or to simulate F (Mach) input signals to the amplifier during bench testing or presetting.

For more specific testing of any component of the variable inlet duct ramp system, consult the applicable Maintenance Instructions Manual. For detailed use of the tester, refer to the current *Operation and Service Instruction Manaul,* NA 17-15A-21.

SYNCHROPHASER TEST SET

This test set (fig. 10-12) is designed to test propeller synchrophaser electronic units. The test set generates all the pulses (dc and ac) required to functionally test the synchrophaser electronic unit completely independent of all its associated components.

The test set is completely transistorized. Its multicircuit switches are specially designed for simplicity of operation. Each switch position programs a particular test by connecting the appropriate inputs to the synchrophaser and the necessary meter required to verify the synchrophaser performance for the particular test.

The test set generates a master pulse and a slave pulse. The pulse circuits are designed to closely simulate the synchrophaser pulse input under dynamic flight conditions. Different phase and speed relationships of the master and slave pulses in accordance with synchrophaser test specifications are programed by setting one of the selector switches for a particular test.

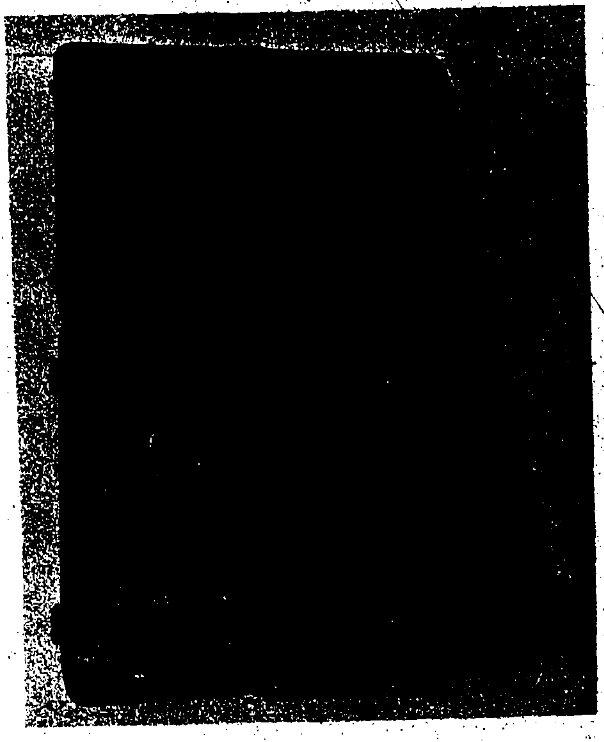

208.261

Figure 10-12.–Synchrophaser test set.

The output of synchrophaser associated components is simulated by the test set. It provides a simulated tachometer signal and the resistance of synchrophaser controls for certain tests. When programed by the selector switches, these signals facilitate measurement of the synchrophaser dynamic response to off-speed, off-phase, speed reset, resynch, and throttle anticipation signals.

Control adjustments are minimized. Only a few of the automatically programed tests require adjustment of either of the feedback gain potentiometers. The accuracy of control adjustment is optimized by designing the test set circuits such that the few adjustments required are null or zero settings on center scale zero meters.

A high degree of accuracy and repeatability is a feature of the gain measuring circuits within the tester. Conventional gain circuits require application and measurement of incremental voltages to the synchrophaser for comparison with resultant output voltages. The gain measurement circuit employs a galvanometer, demodulator, dc power supply, and calibrated potentiometer in a bridge circuit. When the gain test is programed by setting the appropriate selector switch, the calibrated potentiometer is rotated to null the galvanometer; with the galvanometer nulled, the potentiometer calibration gives a direct readout of amplifier gain. This circuit avoids the inaccuracies of input settings and error amplification of incremental gain comparison and the possibility of error in calculating the gain factor.

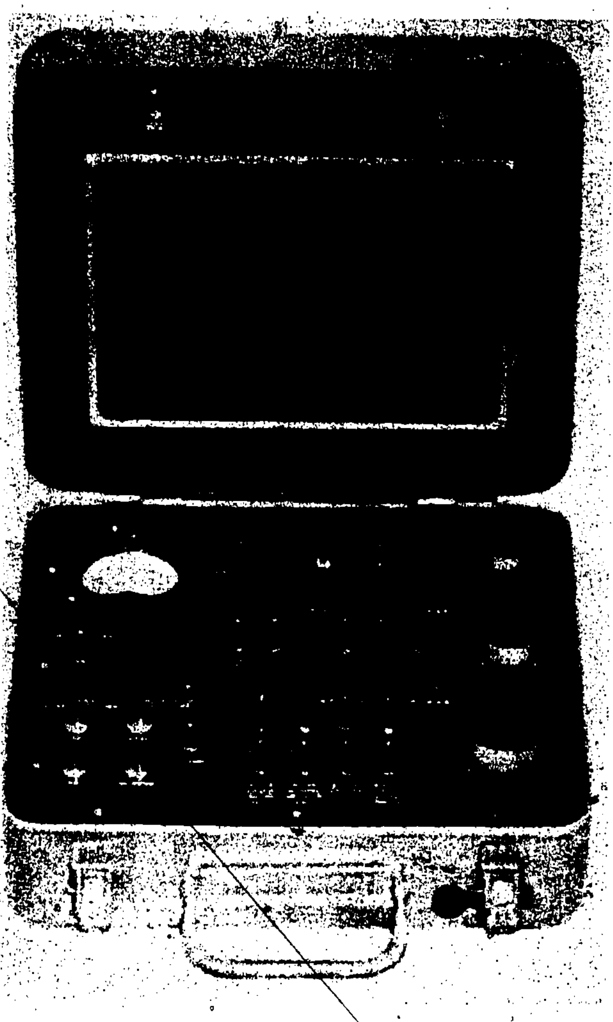

208.283

Figure 10-13.—Electrical components check-out test set.

For complete instructions on this tester refer to the current *Operation and Service Instruction Manual*, NW 17-15D-3.

ELECTRICAL COMPONENTS CHECK-OUT TEST SET

The electrical components check-out test set number 6799150 (fig. 10-13) is used for maintenance and overhaul testing of T56 turboprop engine electrical components. The test set includes function switches, function and power indicator lights, a dc ammeter, loading resistors, test set-engine distribution box interconnecting and power cables, and a condensed operating chart.

The power requirement is 28 volts dc which can be obtained from the electrical system on the engine, provided power is applied to the aircraft. The test set can be used to check the operation of the following T56 components: Power lever switches; 2,200 rpm, 9,000 rpm, and 13,000 rpm switches; Fuel manifold pressure switch; Ignition exciter; Drip (drain) valve solenoid; Ground start solenoid; Secondary pump pressure switch; Fuel shutoff actuator; Anti-icing air solenoid; Ignition relay; Fuel enrichment solenoid; 20% take solenoid; and Pump-paralleling valve.

Consult the applicable aircraft Maintenance Instructions Manual or the *Handbook of Operation and Service Instructions*, NAVAIR 17-15AC-4, for test procedures and procedures to observe in connecting the test set to the engine under test.

TEST EQUIPMENT MAINTENANCE

Some of the test equipment discussed in this chapter require special maintenance techniques. These have been mentioned as a part of the detailed coverage for the specific equipments to which they apply. In the following paragraphs a more general discussion of test equipment maintenance, applicable to most test equipments, is presented.

TYPES OF MAINTENANCE

Maintenance personnel must be prepared to repair and adjust certain types of test equipment should they fail in operation. The trouble must be located, and after repairs or replacements have been made, the equipment must be tested and adjusted to conform to the original system specifications. Maintenance personnel must endeavor to find the cause of equipment failure, particularly when the trouble is a recurrent one. The recurrence of a fault usually indicates that the effect, not the cause, has been remedied.

As with the other kinds of avionics equipment, the two basic types of maintenance for test equipment are preventive maintenance and corrective maintenance.

Preventive Maintenance

Preventive maintenance, as performed at the organizational maintenance level is of major importance. Preventive maintenance is a systematic series of operations that can be performed on all avionics equipment at regular intervals. The purpose of this maintenance is to eliminate, whenever possible, breakdowns and unwarranted interruptions in service. Through careful and conscientious efforts it is possible to keep this equipment operating at top efficiency at all times. By preventing breakdowns, valuable time can be saved at various levels of maintenance. The importance of this type of maintenance cannot be overemphasized. Avionics test equipment can be utilized only when the equipment is functioning normally and at maximum efficiency. It is vitally important that electricians maintain this equipment properly.

These instructions have been compiled to serve as a guide for a properly organized approach to preventive maintenance. It is suggested that the general techniques outlined in the following paragraphs be utilized whenever possible.

FEEL.—The feel operation is utilized to check rotating machinery and parts that either radiate heat or normally vibrate. This is a check for overheating as well as for parts that are not working.

NOTE: It is important that the feel operation be performed as soon as possible after equipment shutdown. This operation is always performed before attempting any other maintenance work.

INSPECTION.—This is the most important operation in the preventive maintenance program. An untrained observer will have a tendency to overlook minor troubles. It is entirely possible that these troubles may not cause equipment failure at the time when they are first noticed, but after long hours of operation may be the cause of major breakdowns. The electrician should make every effort to become familiar with the complete operating system and the indications of normal functioning of the equipment.

Inspection of the equipment should consist of carefully observing all parts associated with the equipment, noticing their color, placement, state of cleanliness, etc. When performing this operation, look carefully for the following conditions:

1. Overheating. This is indicated by discoloration, blistering, or bulging of the parts. Leakage of chemical compounds from containers such as electrolytic capacitors gives warning of future breakdowns.
2. Placement. Careful observation as to the position of all leads and cables should be made. The original position of all parts and interconnecting leads is shown pictorially in the manual for the equipment.
3. Cleanliness. Careful examination of all corners and recesses in the equipment for the accumulation of dust should be made. All parts, electrical connectors, and soldered joints should be free of foreign matter.
4. Tightness. All connections, mechanical or electrical, should be checked carefully for tightness.

CLEAN, ADJUST AND TIGHTEN.—These operations are considered to be self-explanatory. Familiarity with the equipment and the service manual will facilitate these operations.

CAPACITORS.—Inspection of the terminals of all capacitors for corrosion, loose connections, cracks, or signs of breakage should be made. Capacitor mountings should be carefully inspected to discover loose mounting screws, studs, or brackets. Leads must be examined for signs of poor insulation or cracks, and for signs of decay. Frayed strands on the insulation should be cut away.

Variable capacitors should be inspected for any signs of foreign matter lodged between the plates. The operation of the capacitor may be checked by rotating the movable plates.

It is recommended that the plates of variable capacitors be cleaned with a small brush. In no case should the electrician use an object that may vary the spacing between the plates.

RESISTORS.—All resistors should be checked for signs of blistering, breaking, chipping, and discoloration. Carefully inspect resistor leads for signs of corrosion, dust, or foreign matter. Resistor leads may become broken at the point of contact with the resistor body. Careful examination will reveal this trouble.

Resistors may be cleaned with a soft brush or a clean, dry cloth. When foreign matter is unusually hard to remove, a suitable authorized solvent may be used. Do not attempt to remove foreign matter from a resistor body by scraping.

FUSES.—Inspect all fuses and fuse holders for evidence of heat and arcing. Usually, burning or overheating will take place when the fuse does not make tight contact with its holder. While fuses are removed, check for signs of corrosion, dirt and foreign matter. When replacing the fuse in the holder, check for loss of tension on replacing the fuse holder cap. Check all wire connections to the fuse holder for tight mechanical and electrical joints.

SWITCHES.—Inspect carefully the mechanical and electrical action of each switch. This is best accomplished by placing the switch in different positions while using your sense of touch, sight, and hearing. Note the freedom of movement and the amount of switch tension in each case. Carefully examine multiple section switches to determine if the contacts are touching and clean. Never attempt to pry wafer contacts apart. All rotary members should make good contact with stationary members on each switch.

Carefully clean all rotary switches with a small bursh. Authorized cleaning solvents may be used on contact points when necessary.

POTENTIOMETERS.—Inspect all potentiometers for cleanliness and mechanical action. Potentiometers are protected with dust covers. Do not remove these covers. When evidence indicates that foreign matter exists within the potentiometer structure, send the equipment to a proper maintenance activity for replacement of the potentiometer. Examine the potentiometer structure for loose connections and mounting nuts. Use a soft brush or a dry cloth to remove dust and dirt from around the potentiometer.

TERMINAL BOARDS.—Inspect all terminal boards for signs of cracks, dirt, breakage, and loose connections. Check the mounting hardware for the terminal boards. Tighten the mounting hardware securely; when tightening, do not exert too much pressure.

Clean terminal boards with a soft brush. Do not disturb electrical connections unless visual checks show failures.

Check conditions of each wire lead attached to the terminals in the terminal boards. Tighten mechanical connectors and good electrical contact should result.

CONNECTORS AND ADAPTERS.—Inspect the exterior and interior of each connector and adapter. Look for any signs of breakage or cracking. Clean each connector and adapter with a dry, clean cloth.

CABLES AND CORDS.—Inspect carefully all cords and cables for cracked or deteriorated insulation. Frayed or cut insulation around connecting and supporting points is a common type of failure. Examine all insulation for signs of oil and grease.

Clean all dust, dirt, and foreign matter from all cables and cords. Dust and dirt commonly hide defects in cable and cord insulation.

PILOT LAMPS.—Inspect pilot lamp assemblies for loose lamps, loose or dirty connectors, and loose mounting nuts. Inspect the pilot lamp for looseness of the glass envelope. Tighten loose lamps in sockets and clean electrical connections to the pilot lamp socket.

TERMINALS.–Inspect terminals periodically for cleanliness and tightness. When replacing faulty terminal lugs, use only an exact replacement. Clean terminals with a stiff brush; when corrosion is present, use crocus cloth.

CABINET AND CHASSIS.–Inspect the interior of the cabinet for cleanliness. Check the control panel for loose knobs and tighten all loose setscrews on control knobs. Wipe all dust, dirt, and foreign matter from the exterior and interior of the cabinet with a clean, dry cloth.

GEARS.–Inspect gear teeth on switch drive mechanisms for cleanliness and ease of operation. Clean drive mechanisms with a small brush. If dirt accumulation is great, use an authorized cleaning solvent.

Corrective Maintenance

Corrective maintenance is performed when an actual trouble exists on the equipment. After the repair has been accomplished, calibration of the equipment is necessary.

The electrician is limited to some extent in the corrective maintenance that he is able to perform on test equipments (and still have them function accurately and reliably). This is true principally because he does not have the tools and equipment, and sometimes the spare parts, necessary for this specialized form of maintenance. Therefore, the electrician should realize the limitations imposed upon the repair of certain test equipments, and in no case should he attempt repairs until the applicable Service Instruction Manual has been thoroughly read. Particular note should be made of possible circuit misalignment or need for recalibration resulting from parts replacement. In the corrective maintenance section of the test equipment instructions manuals, troubleshooting charts are provided for the localization of trouble. When charts are supplied they should be utilized for the correction of any trouble.

REPAIR.–In repairing equipment a few preliminary tests, along with a logical procedure, often serve to locate the source of trouble without the use of extensive test equipment. In many cases the reported symptoms, along with a few astute observations, will indicate the type and probable location of the trouble. Make observations carefully, and keep the symptoms constantly in mind.

The use of the senses of smell, sight, hearing, and touch often localize the source of trouble rapidly. Note unusual odors, such as sealing compound, which would indicate an overloaded transformer; scorched paint, which could indicate an overheated resistor; and burning rubber, which might point to defective insulation. If any component emits any unusual odor, the trouble might be in that part or in the assocaited circuit. Examine for smoking parts or sparking. Notice whether wax impregnated capacitors have lost any wax–this is usually indicative of a defective capacitor. Depending, of course, upon the type of test equipment that is faulty, hum, scratch noises, and other odd sounds should have special meaning for the electrician.

CALIBRATION.–Complete recalibration of test equipment should not be attempted by the electrician. For the most accurate calibration of test equipment, precision meters, frequency standards, etc., must be used. These precision equipments are not usually found in a shop where maintenance of aircraft equipment is performed. Accurate calibration of the equipment requires the more complete testing and calibrating instruments which are available at a test equipment repair facility.

Calibration schedules which have been circulated to all fleet activities should be adhered to in order that all test equipment will be accurate.

APPENDIX 1

U.S. CUSTOMARY AND METRIC SYSTEM UNITS OF MEASUREMENTS

THESE PREFIXES MAY BE APPLIED TO ALL SI UNITS

Multiples and Submultiples	Prefixes	Symbols
1 000 000 000 000 = 10^{12}	tera (tĕr′ȧ)	T
1 000 000 000 = 10^{9}	giga (jĭ′gȧ)	G
1 000 000 = 10^{6}	mega (mĕg′ȧ)	M*
1 000 = 10^{3}	kilo (kĭl′ō̍)	k*
100 = 10^{2}	hecto (hĕk′tō̍)	h
10 = 10	deka (dĕk′ȧ)	da
0.1 = 10^{-1}	deci (dĕs′ĭ)	d
0.01 = 10^{-2}	centi (sĕn′tĭ)	c*
0.001 = 10^{-3}	milli (mĭl′ĭ)	m*
0.000 001 = 10^{-6}	micro (mī′krō̍)	μ*
0.000 000 001 = 10^{-9}	nano (năn′ō̍)	n
0.000 000 000 001 = 10^{-12}	pico (pē′kō̍)	p
0.000 000 000 000 001 = 10^{-15}	femto (fĕm′tō̍)	f
0.000 000 000 000 000 001 = 10^{-18}	atto (ăt′tō̍)	a

*Most commonly used

Appendix I—U.S. CUSTOMARY AND METRIC SYSTEM UNITS OF MEASUREMENTS

COMMON EQUIVALENTS AND CONVERSIONS

Approximate Common Equivalents		Conversions Accurate to Parts Per Million	
1 inch	= 25 millimeters	inches x 25.4*	= millimeters
1 foot	= 0.3 meter	feet x 0.3048*	= meters
1 yard	= 0.9 meter	yards x 0.9144*	= meters
1 mile	= 1.6 kilometers	miles x 1.609 344	= kilometers
1 square inch	= 6.5 square centimeters	square inches x 6.4516*	= square centimeters
1 square foot	= 0.09 square meter	square feet x 0.092 903	= square meters
1 square yard	= 0.8 square meter	square yards x 0.836 127	= square meters
1 acre	= 0.4 hectare †	acres x 0.404 686	= hectares
1 cubic inch	= 16 cubic centimeters	cubic inches x 16.387 064	= cubic centimeters
1 cubic foot	= 0.03 cubic meter	cubic feet x 0.028 317	= cubic meters
1 cubic yard	= 0.8 cubic meter	cubic yards x 0.764 555	= cubic meters
1 quart (lq.)	= 1 liter †	quarts (lq.) x 0.946 353	= liters
1 gallon	= 0.004 cubic meter	gallons x 0.003 785	= cubic meters
1 ounce (avdp)	= 28 grams	ounces (avdp) x 28.349 523	= grams
1 pound (avdp)	= 0.45 kilogram	pounds (avdp) x 0.453 592	= kilograms
1 horsepower	= 0.75 kilowatt	horsepower x 0.745 7	= kilowatts
1 millimeter	= 0.04 inch	millimeters x 0.039 37	= inches
1 meter	= 3.3 feet	meters x 3.280 84	= feet
1 meter	= 1.1 yards	meters x 1.093 613	= yards
1 kilometer	= 0.6 mile	kilometers x 0.621 371	= miles
1 square centimeter	= 0.16 square inch	square centimeters x 0.155	= square inches
1 square meter	= 11 square feet	square meters x 10.76391	= square feet
1 square meter	= 1.2 square yards	square meters x 1.195 99	= square yards
1 hectare †	= 2.5 acres	hectares x 2.471054	= acres
1 cubic centimeter	= 0.06 cubic inch	cubic centimeters x 0.061 024	= cubic inches
1 cubic meter	= 35 cubic feet	cubic meters x 35.31467	= cubic feet
1 cubic meter	= 1.3 cubic yards	cubic meters x 1.307 951	= cubic yards
1 liter †	= 1 quart (lq.)	liters x 1.056 688	= quarts (lq.)
1 cubic meter	= 250 gallons	cubic meters x 264.172	= gallons
1 gram	= 0.035 ounces (avdp)	grams x 0.035 274	= ounces (avdp)
1 kilogram	= 2.2 pounds (avdp)	kilograms x 2.204 623	= pounds (avdp)
1 kilowatt	= 1.3 horsepower	kilowatts x 1.341 02	= horsepower

† common term not used in SI

* exact

INDEX

INDEX

AVIATION ELECTRICIAN'S MATE 1 & C

NAVEDTRA 10349-D

Prepared by the Naval Education and Training Program Development Center, Pensacola, Florida

Your NRCC contains a set of assignments and self-scoring answer sheets (packaged separately). The Rate Training Manual, Aviation Electrician's Mate 1&C, NAVEDTRA 10349-D, is your textbook for the NRCC. If an errata sheet comes with the NRCC, make all indicated changes or corrections. Do not change or correct the textbook or assignments in any other way.

HOW TO COMPLETE THIS COURSE SUCCESSFULLY

Study the textbook pages given at the beginning of each assignment before trying to answer the items. Pay attention to tables and illustrations as they contain a lot of information. Making your own drawings can help you understand the subject matter. Also, read the learning objectives that precede the sets of items. The learning objectives and items are based on the subject matter or study material in the textbook. The objectives tell you what you should be able to do by studying assigned textual material and answering the items.

At this point you should be ready to answer the items in the assignment. Read each item carefully. Select the BEST ANSWER for each item, consulting your textbook when necessary. Be sure to select the BEST ANSWER from the subject matter in the textbook. You may discuss difficult points in the course with others. However, the answer you select must be your own. Use only the self-scoring answer sheet designated for your assignment. Follow the scoring directions given on the answer sheet itself and elsewhere in this course.

Your NRCC will be administered by your command or, in the case of small commands, by the Naval Education and Training Program Development Center. No matter who administers your course you can complete it successfully by earning grades that average 3.2 or higher. If you are on active duty, the average of your grades in all assignments must be at least 3.2. If you are NOT on active duty, the average of your grades in all assignments of each creditable unit must be at least 3.2. The unit breakdown of the course, if any, is shown later under Naval Reserve Retirement Credit.

WHEN YOUR COURSE IS ADMINISTERED BY LOCAL COMMAND

As soon as you have finished an assignment, submit the completed self-scoring answer sheet to the officer designated to administer it. He will check the accuracy of your score and discuss with you the items that you do not understand. You may wish to record your score on the assignment itself since the self-scoring answer sheet is not returned.

If you are completing this NRCC to become eligible to take the fleetwide advancement examination, follow a schedule that will enable you to complete all assignments in time. Your schedule should call for the completion of at least one assignment per month.

Although you complete the course successfully, the Naval Education and Training Program Development Center will not issue you a letter of satisfactory completion. Your command will make a note in your service record, giving you credit for your work.

WHEN YOUR COURSE IS ADMINISTERED BY THE NAVAL EDUCATION AND TRAINING PROGRAM DEVELOPMENT CENTER

After finishing an assignment, go on the the next. Retain each completed self-scoring answer sheet until you finish all the assignments in a unit (or in the course if it is not divided into units). Using the envelopes provided, mail your self-scored answer sheets to the Naval Education and Training Development Center where the scores will be verified and recorded. Make sure all blanks at the top of each answer sheet are filled in. Unless you furnish all the information required, it will be impossible to given you credit for your work. You may wish to record your scores on the assignments since the self-scoring answer sheets are not returned.

The Naval Education and Training Program Development Center will issue a letter of satisfactory completion to certify successful completion of the course (or a creditable unit of the course). To receive a course-completion letter, follow the directions given on the course-completion form in the back of this NRCC.

You may keep the textbook and assignments for this course. Return them only in the event you disenroll from the course or otherwise fail to complete the course. Directions for returning the textbook and assignments are given on the book-return form in the back of this NRCC.

PREPARING FOR YOUR ADVANCEMENT EXAMINATION

Your examination for advancement is based on the Manual of Navy Enlisted Manpower and Personnel Classification and Occupational Standards (NAVPERS 18068-D). The sources of questions in this examination are given in the Bibliography for Advancement Study (NAVEDTRA 10052). Since your NRCC and textbook are among the sources listed in this bibliography, be sure to study both in preparing to take your advancement examination. The standards for your rating may have changed since your course and textbook were printed, so refer to the latest editions of NAVPERS 18068-D and NAVEDTRA 10052.

NAVAL RESERVE RETIREMENT CREDIT

This course is evaluated at 12 Naval Reserve retirement points, and will be credited upon successful completion of the course. These points are creditable to personnel eligible to receive them under current directives governing retirement of Naval Reserve personnel. Naval Reserve retirement credit will not be given for this course if the student has previously received retirement credit for any Aviation Electrician's Mate 1&C, NRCC or ECC.

COURSE OBJECTIVE

The basic objective of this course (RTM/NRCC package) is to help the individual student meet the professional (technical) qualifications for advancement to Aviation Electrician's Mate 1st and Chief. By completing this course, the student will demonstrate his understanding of course materials by corectly answering questions in the following subject areas: the advancement requirements of the Aviation Electrician's Mate rating; organization and functions of the Navy supply system; alternating-current generators and generating systems; operating principles of air data computer systems; maintenance of attitude reference systems and aircraft compass systems; fundamentals of inertial navigation systems; shop organization and maintenance techniques; and function, purpose, operation, and maintenance of test equipment.

While working on this nonresident career course, you may refer freely to the text. You may seek advice and instruction from others on problems arising in the course, but the solutions submitted must be the result of your own work and decisions. You are prohibited from referring to or copying the solutions of others, or giving completed solutions to anyone else taking the same course.

Naval nonresident career courses may include a variety of items*-- multiple-choice, true-false, matching, etc. The items are not grouped by type; regardless of type, they are presented in the same general sequence as the textbook material upon which they are based. This presentation is designed to preserve continuity of thought, permitting step-by-step development of ideas. Some courses use many types of items, others only a few. The student can readily identify the type of each item (and the action required of him) through inspection of the samples given below.

MULTIPLE-CHOICE ITEMS

Each item contains several alternatives, one of which provides the best answer to the item. Select the best alternative and erase the appropriate box on the answer sheet.

SAMPLE

s-1. The first person to be appointed Secretary of Defense under the National Security Act of 1947 was
1. George Marshall
2. James Forrestal
3. Chester Nimitz
4. William Halsey

The erasure of a correct answer is indicated in this way on the answer sheet:

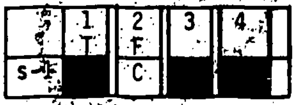

TRUE-FALSE ITEMS

Determine if the statement is true or false. If any part of the statement is false the statement is to be considered false. Erase the appropriate box on the answer sheet as indicated below.

SAMPLE

s-2. Any naval officer is authorized to correspond officially with a bureau of the Navy Department without his commanding officer's endorsement.

The erasure of a correct answer is also indicated in this way on the answer sheet:

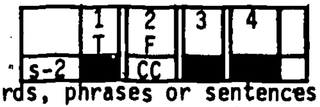

MATCHING ITEMS

Each set of items consists of two columns, each listing words, phrases or sentences. The task is to select the item in column B which is the best match for the item in column A that is being considered. Specific instructions are given with each set of items. Select the numbers identifying the answers and erase the appropriate boxes on the answer sheet.

SAMPLE

In items s-3 through s-6, match the name of the shipboard officer in column A by selecting from column B the name of the department in which the officer functions.

A. Officers	B. Departments
s-3. Damage Control Assistant	1. Operations Department
s-4. CIC Officer	2. Engineering Department
s-5. Assistant for Disbursing	3. Supply Department
s-6. Communications Officer	

The erasure of a correct answer is indicated in this way on the answer sheet:

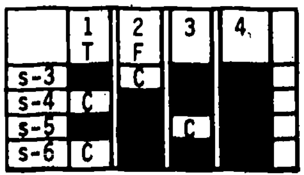

How To Score Your Immediate Knowledge of Results (IKOR) Answer Sheets

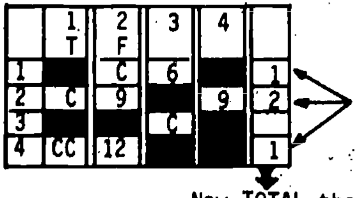

Total the number of incorrect erasures (those that show page numbers) for each item and place in the blank space at the end of each item.

Sample only

Number of boxes erased incorrectly	0-2	3-7	8-
Your score	4.0	3.9	3.8

Now TOTAL the column(s) of incorrect erasures and find your score in the Table at the bottom of EACH answer sheet.

NOTICE: If, on erasing, a page number appears, review text (starting on that page) and erase again until "C", "CC", or "CCC" appears. For courses administered by the Center, the maximum number of points (or incorrect erasures) will be deducted from each item which does NOT have a "C", "CC", or "CCC" uncovered (i.e., 3 pts. for four choice items, 2 pts. for three choice items, and 1 pt. for T/F items).

Assignment 1

The AE Rating; Supply and Publications

Text: Pages 1 - 32

In this course you will demonstrate that learning has taken place by correctly answering training items. The mere physical act of indicating a choice on an answer sheet is not in itself important; it is the mental achievement, in whatever form it may take, prior to the physical act that is important and toward which nonresident career course learning objectives are directed. The selection of the correct choice for a course training item indicates that you have fulfilled, at least in part, the stated objective(s).

The accomplishment of certain objectives, for example, a physical act such as drafting a memo, cannot readily be determined by means of objective type course items; however, you can demonstrate by means of answers to training items that you have acquired the requisite knowledge to perform the physical act. The accomplishment of certain other learning objectives, for example, the mental acts of comparing, recognizing, evaluating, choosing, selecting, etc., may be readily demonstrated in a course by indicating the correct answers to training items.

The comprehensive objective for this course has already been given. It states the purpose of the course in terms of what you will be able to do as you complete the course.

The detailed objectives in each assignment state what you should accomplish as you progress through the course. They may appear singly or in clusters of closely related objectives, as appropriate; they are followed by items which will enable you to indicate your accomplishment.

All objectives in this course are learning objectives and items are teaching items. They point out important things, they assist in learning, and they should enable you to do a better job for the Navy.

This self-study course is only one part of the total Navy training program; by its very nature it can take you only part of the way to a training goal. Practical experience, schools, selected reading, and the desire to accomplish are also necessary to round out a fully meaningful training program.

Learning Objective: Recognize titles, contents, and use of publications pertaining to advancement in the AE rating, and point out responsibilities, billets, qualifications, and advantages connected with advancement, including the purpose of service ratings.

1-1. The professional qualifications for advancement in the AE rating may have changed significantly in the recent past. To ensure up-to-date qualifications, the AE preparing for advancement to AE1 or AEC should consult the latest revision of

1. Military Requirements for Petty Officers 1 & C, NAVPERS 10057
2. the Manual of Navy Enlisted Manpower and Personnel Classifications and Occupational Standards, NAVPERS 18068
3. List of Training Manuals and Correspondence Courses, NAVEDTRA 10061
4. Link, NAVPERS 15980

1-2. Which ratings have been established in order that personnel may be properly utilized within the scope of a general rating where specialization is required?
1. Service ratings
2. Special ratings
3. Emergency ratings
4. Senior ratings

1-3. The duties of a senior AE are such that in addition to being an accomplished military leader he should also be proficient as
1. a supervisor and an instructor only
2. an instructor and an inspector only
3. an inspector and a supervisor only
4. an inspector, a supervisor, and an instructor

1-4. The best way to develop leadership qualities is through
1. college level courses
2. Naval Air Maintenance Training Group courses
3. the Aviation Electrician's Mate Intermediate course
4. hard work and practice

1-5. Nonresident Career Courses, Rate Training Manuals, and Navy-wide advancement examinations are written at the
1. Naval Training Center, Great Lakes, Illinois
2. Naval Education and Training Program Development Center, Pensacola, Florida
3. Naval Air Technical Training Center, Memphis, Tennessee
4. Naval Air Technical Training Center, Jacksonville, Florida

1-6. Which of the following personal advantages, other than monetary, can be gained from advancement in rating?
1. Greater prestige and higher morale only
2. Higher morale and a feeling of accomplishment only
3. A feeling of accomplishment and greater prestige only
4. Greater prestige, higher morale, and a feeling of accomplishment

1-7. Which of the following requirements must have been met prior to being advanced to AEC?
1. Completed ten years total enlisted service
2. Attended Aviation Electrician's Mate Intermediate Course, Class C7
3. Have commanding officer's recommendation
4. Passed the E-7 military leadership examination

1-8. What significance does the RAW SCORE have in determining advancement?
1. It determines whether the candidate passes or fails the advancement examination
2. It establishes the number of points to be added to the Final Multiple Score
3. It is computed with the performance marks to determine advancement
4. It is the final determiner for advancement

1-9. Which of the following scores is the same as the number of points earned on the advancement examination?
1. Raw score
2. Standard score
3. Final multiple score
4. Performance score

1-10. What determines the final selection of E8 and E9 candidates for advancement?
1. Their final multiple scores
2. Their raw scores
3. Their standard scores
4. Selection boards

1-11. The publication which delineates the requirements for advancement in rating of naval personnel by fixing the minimum requirements is the
1. Naval Aeronautic Publications Index, NAVAIR 00-500
2. Bibliography for Advancement Study, NAVEDTRA 10052 (Series)
3. Manual of Navy Enlisted Manpower and Personnel Classifications and Occupational Standards, NAVPERS 18068 (Series)
4. List of Training Manuals and Correspondence courses, NAVEDTRA 10061 (Series)

1-12. Which of the following statements regarding the Manual of Navy Enlisted Manpower and Personnel Classifications and Occupational Standards is correct?
1. It is issued annually by the Bureau of Naval Personnel
2. It covers only the professional requirements for advancement
3. It lists occupational standards for general ratings but not for service ratings
4. It covers both military and professional requirements for advancement in all rates and ratings

1-13. Why should a man preparing for advancement to AEC carefully examine the AE section of the Occupational Standards Manual rather than occupational standards listed elsewhere?

1. Because the material from other sources might list only the examination subjects, while the Occupational Standards Manual lists both the examination subjects and the military requirements
2. Because the material from other sources will probably show what a man is expected to learn if he wants to pass the rating exam, but the Occupational Standards Manual also shows what he should already know
3. Because any revision to the occupational standards in the AE rating will be found in the Occupational Standards Manual and might not be included in other sources
4. Because the Occupational Standards Manual is more available than other sources

1-14. For advancement, which occupational standards is an AE required to know?

1. Those specified for the rate to which he is seeking advancement
2. Those specified for the rate to which he is seeking advancement, and all standards for lower grades
3. Those specified for the rate to which he is seeking advancement, and all standards for higher grades
4. All occupational standards

1-15. The Personnel Advancement Requirement (PAR) Program is a program which replaces

1. training manuals and correspondence courses
2. the Bibliography for Advancement Study
3. occupational standards
4. the Record of Practical Factors

1-16. Each rating Personnel Advancement Requirement (PAR) lists the requirements for advancement to paygrades

1. E1-E9
2. E8 and E9 only
3. E3-E7 only
4. E4-E7 only

1-17. Section I of each rating Personnel Advancement Requirement (PAR) list contains, among other things, the individual's time in rate and length of service.

1-18. How often and by whom is the publication Bibliography for Advancement Study, NAVEDTRA 10052 (Series), issued in revised form?

1. Annually by the Chief of Naval Operations
2. Annually by the Chief of Naval Education and Training
3. Semiannually by the Bureau of Naval Personnel
4. Annually by the Bureau of Naval Personnel

1-19. The completion requirement for a mandatory Rate Training Manual marked with an asterisk (*) in Bibliography for Advancement Study, NAVPERS 10052 (Series) may be satisfied by

1. passing a locally prepared test only
2. passing the nonresident career course based on the designated mandatory training manual only
3. completing an appropriate school only
4. passing a nonresident career course or a locally prepared test, or completing an appropriate school

---

Learning Objective: Identify the purpose and types of Rate Training Manuals, and select effective study methods.

1-20. The publication, Aviation Electrician's Mate 1 & C, NAVEDTRA 10349-D, is classified as what type of manual?

1. A Basic Manual
2. A Subject Matter Manual
3. A Rate Training Manual
4. An Emergency Service Manual

1-21. Which of the following statements concerning the information presented in a subject matter manual is correct?

1. It is common to more than one Navy rating
2. It is to be studied by all Navy personnel
3. It is simple and fundamental enough to be understood by beginners
4. It is fundamental to the rating from which the manual's title is derived

1-22. The special purpose of rate training manuals is to

1. cover the professional and military aspects of specific ratings
2. teach specific equipments to personnel in specific rates
3. offer advanced study to graduates of Navy schools
4. aid personnel to advance in rating

1-23. To use rate training manual, Aviation Electrician's Mate 1 & C to the best advantage and to gain the most from it, it is suggested that you start by

1. browsing through the manual
2. prereading the entire manual
3. reading the introductions to each chapter
4. reading the preface, table of contents, and index

1-24. The reason why study suggestions 4 and 7 are included in the list of study suggestions given in your textbook is that in following them you

1. are able to peg each subject to an individual standard as given in the Occupational Standards Manual
2. familiarize yourself with the aims and contents of the manual and relate the subject areas to your past experiences, thereby creating an excellent learning situation
3. write an outline of the manual which will be valuable reference for future study
4. are able to separate the military standards from the professional standards in the textbook

1-25. The use of nonresident career courses is encouraged because

1. questions from nonresident career courses are used in advancement examinations
2. participation in the advancement cycle is mandatory
3. material in rate training manuals is learned better if studied along with the nonresident career course
4. successful completion of a nonresident career course can take the place of a Navy school

---

Learning Objective: Recognize techniques of and increased responsibilities for supervision, leadership, training, and working with others that accompany advancement to AE1 and AEC.

1-26. Which statement is correct concerning your responsibilities, as a senior AE in charge of a shop, in addition to your supervisory duties?

1. You must train strikers to interpret general orders from higher authority without help from the shop supervisor
2. You must demand respect regardless of your professional knowledge
3. You are the intermediary between your shop personnel and higher authority in both technical and military matters
4. You tell your men how a job is to be done without showing them how

1-27. As a senior petty officer your authority, and that of all other Navy personnel, rests upon the

1. position occupied
2. leadership qualities exhibited
3. degree of specialized knowledge and skills
4. authority conferred by the commanding officer

1-28. Although all the following statements are correct, which one is most applicable to the training of subordinates in technical and military subjects by senior petty officers? Training is conducted

1. any time maintenance is performed
2. whenever and wherever a group of subordinates can be assembled for classroom type instruction
3. any time and any place an opportunity for training exists
4. by holding formal or informal sessions during idle periods when no work can be accomplished

1-29. Which of the following is NOT a good reason for correcting the terminology used by a junior AE who refers to a commutator as a commentator?

1. Such technical ignorance must be corrected in the interest of the individual, the command and the Navy
2. The principles of good training require that a senior petty officer insist upon the use of proper technical terms by his subordinates
3. Failure to use proper terminology shows an unfamiliarity with the subject and places the individual at a disadvantage in communications which involve the subject
4. It shows the junior that you know your job well

1-30. Which of the following serves as a good guideline for developing the curriculum for a training program?
1. Maintenance Instructions Manuals
2. The Personnel Advancement Requirement (PAR) (NAVEDTRA 1414/4)
3. Naval Aviation Maintenance Program, OPNAV 4790.2 (Series)
4. List of Training Manuals and correspondence Courses, NAVEDTRA 10061 (Series)

1-31. One of the concepts of long-range on-the-job training programs is that senior AEs should attempt to
1. emphasize specialization
2. emphasize study of theory instead of practice
3. broaden the specialized knowledge and skill of their personnel
4. make adequate allowance for trial-and-error learning

1-32. How may a senior AE be sure he is getting the latest professional information?
1. By utilizing films listed in the current U.S. Navy Film Catalog, NAVAIR 10-1-777
2. By utilizing only the latest revision of publications that are periodically revised
3. By checking the NAMP Manual for applicability of publications
4. By performing aircraft maintenance from information given in rate training manuals only

---

Learning Objective: Evaluate opportunities available to outstanding petty officers, and identify qualifications prerequisite to advancement.

1-33. What is the maximum number of times that an E-7 may apply for warrant officer?
1. One
2. Two
3. Three
4. Four

1-34. An E-6 with 10 years of service may apply for which of the following advancements?
1. E-7 only
2. E-7 and W-2 only
3. E-7 and LDO ensign only
4. E-7, W-2, and LDO ensign

1-35. Final recommendation for selection of warrant officer and limited duty officer candidates is a function of
1. the Secretary of Defense
2. a selection board
3. the Chief of Naval Personnel (Deputy for Manpower Control)
4. the Chief of Naval Operations

Learning Objective: Recognize ASO-related functions, management controls and money allocations, including purposes of the allocations.

1-36. Which of the following exercises management control over ASO?
1. The Naval Air Systems Command
2. The Naval Supply Systems Command
3. The Chief of Naval Material
4. The Chief of Naval Operations

1-37. The primary inventory control point for NAMP with respect to aviation spare parts is
1. CNM
2. NAVSUP
3. NAVAIR
4. ASO

1-38. Which of the following is NOT a function of ASO?
1. Budgeting and funding of all assigned aviation material requirements
2. Procuring material directly from industry
3. Disposing of excess materials
4. Authorizing aviation budgets

1-39. Congressional authorization for the expenditure of funds from the general fund is known as an
1. operating target
2. appropriation
3. authorization
4. allotment

1-40. The money allocated to ASO for purchasing spare parts and furnishing them to activities at no cost comes from the
1. OPTAR
2. APA
3. OPA
4. CPA

1-41. Which of the following is NOT financed by the Aviation Fleet Maintenance Budget?
1. Common hardware
2. Lubricants
3. Cutting compounds
4. Flight crew clothing

Learning Objective: Recognize meanings of various cognizance symbols and SM&R codes, and identify contents of, uses for, and command revision responsibilities toward maintenance-related supply publications.

1-42. Which of the following cognizant symbols used at the beginning of a National Stock Number represents ASO?
1. 1R
2. 2V
3. 8R
4. 9N

1-43. Section I of NAVSUP 2002 contains which of the following listings?
1. An ascending alphabetical/numerical listing of all publications and forms
2. A descending alphabetical/numerical listing of all publications and forms
3. An ascending alphabetical/numerical listing of aircraft publications only
4. A descending alphabetical/numerical listing of aircraft publications only

1-44. For which of the following would use of the IPB be most useful?
1. For finding equipment input power requirements
2. For identifying equipment
3. For obtaining the stock number of equipment
4. For obtaining the dimensions of equipment

1-45. Which volume of the S3 aircraft IPB contains the Reference Designation Index?
1. 1
2. 2
3. 3
4. 4

1-46. What SM&R code means that an item is to be manufactured at an IMA?
1. MG
2. PG
3. PA
4. PE

1-47. Which of the following information about a part is NOT contained in the Numerical Index of Part Numbers of an IPB?
1. The particular IPB section listing the part
2. The SM&R code for the part
3. The figure and index number of items
4. The reference designator for the part

1-48. Items known to be required to maintain aeronautical activities in a material readiness condition are listed on a/an
1. aeronautical allowance list
2. initial outfitting list
3. aeronautical directive list
4. table of basic allowance

1-49. Who establishes the reissue cycles for Aeronautical Allowance Lists?
1. NAVAIRSYSCOM
2. ASO
3. CNO
4. DOD

Learning Objective: Recognize functions and organizational aspects of supply sections and centers.

1-50. Material requirements of a work center are submitted first to
1. SSC
2. MCC
3. SRS
4. CCS

1-51. A Supply Support Center is composed of what two sections?
1. MCC and CCS
2. MCC and SRS
3. SRS and CCS
4. SRS and PMS

1-52. What supply section is responsible for preparing DD FORM 1348?
1. SSC
2. CCS
3. SRS
4. PMS

1-53. When an organizational work center orders a part, who assigns the priority indicator and the project code?
1. The work center ordering the part assigns both
2. Material control assigns both
3. Maintenance control assigns both
4. Maintenance control assigns the priority and material control assigns the project code

1-54. Establishing procedures for proper operation of the tool room is a function of
1. the line division
2. Material Control
3. Quality Assurance
4. the aircraft division

1-55. Which of the following is a function of Material Control?
1. To inventory aircraft upon receipt or transfer
2. To develop the OPTAR
3. To ensure APA funds are used for fuel only
4. To verify NORS requisitions daily and NFE requisitions weekly

---

Learning Objective: Recognize purposes of various supply-related programs, and identify facts concerning parts kits, activity designators, preexpended bins, rotatable pools, and accountability codes.

1-56. The purpose of the screening program in an intermediate maintenance activity is to
1. repair defective equipment
2. package material turned in and convert it to RFI status
3. determine if defective material can be repaired locally
4. ensure that repaired material is available for maintenance

1-57. What is the purpose of MILSTRIP?
1. To standardize the supply system within the military establishment
2. To ensure that manufacturers produce an item the same each time it is manufactured
3. To provide a priority system for the requisition of supplies
4. To ensure that manufacturers are producing quality items for military use

1-58. Which of the following force/activity designators, when used in peace time, normally must be approved by the President or the Joint Chiefs of Staff?
1. I
2. II
3. III
4. IV

In items 1-59 through 1-61, select from column B the type kit to which each statement concerning parts kits in column A applies.

A. Statements

1-59. It contains items to which an expiration date is not normally assigned and which can usually be installed without use of special tools.

1-60. It can contain both soft and hard goods and bears an expiration date

1-61. It is not used by personnel of an operating squadron.

B. Type Kits

1. C
2. D
3. F
4. A

1-62. The principal value of preexpended bins in maintenance activity spaces is that
1. the material consigned to them is not accountable at any supply level
2. the material consigned to them can be protected from deterioration because of age
3. the activity's supply division is relieved of the responsibility for stocking and maintaining high-usage, low-cost items
4. some high-usage, low-cost items are immediately available to maintenance personnel

1-63. The commanding officer must approve placing consumable items in the preexpended bin if their unit price exceeds what minimum value?
1. $ 5
2. $15
3. $25
4. $50

1-64. For an item to be placed in a rotatable pool, it must have a minimum usage rate of
1. one per month
2. one per quarter
3. one per year
4. one every two years

1-65. Which of the following can NOT be determined from the SM&R code of an item?
1. The source of spares
2. The level of maintenance authorized to use the item
3. The level of maintenance authorized to overhaul the item
4. The cognizant activity

1-66. What should you do to obtain a replacement part that has a source code of MG?
1. Request that IMA manufacture the part
2. Request that the part be manufactured by depot-level maintenance
3. Have supply open-purchase the part
4. Order component parts and assemble them upon receipt

1-67. The third position in an SM&R code indicates the
1. level of maintenance authorized to use and repair support items
2. source for acquiring the item
3. lowest maintenance level for complete repair
4. disposition action for unserviceable items

1-68. A part requiring assembly at depot-level maintenance is used repeatedly by your squadron. Which of the following actions should you take concerning the part?
1. Wait until the next provisioning conference and get its code changed
2. Notify Supply to have the code changed on the IMRL
3. Submit your recommended change on a UR
4. Request that NAVAIRREWORKFAC stockpile these parts in order to meet anticipated usage

Learning Objective: Recognize criteria for conducting material inventories and surveys, for using supply forms, and for repairing defective components, and identify the producer of the IMRL.

1-69. How often does the controlling custodian of reportable support equipment inventory the equipment?
1. Biannually
2. Annually
3. Each 18 months
4. Only when directed by ASO

1-70. Who produces the IMRL?
1. NAVAIRSYSCOMREPS
2. ACC
3. CNM
4. NAVSUPSYSCOM

1-71. Which of the following actions applies to defective repairable components removed from an aircraft?
1. All components should be forwarded to the appropriate depot maintenance activity
2. All components should be disposed of locally
3. All components should be repaired at the lowest level of maintenance which has the capability
4. All components should be turned in to Supply

1-72. Which of the following forms is used for documentation of material returned to the supply system?
1. NAVSUP FORM 1249
2. DD FORM 1348
3. DD FORM 1348-1
4. DD FORM 4790-26

1-73. Which of the following officers may serve on a formal survey board convened to survey material belonging to the avionics division?
1. The avionics officer
2. The aircraft division officer
3. The commanding officer
4. The officer having custody of the material being surveyed

1-74. If the reviewing officer disapproves the findings of an informal survey, what action should he take?
1. Cause another informal survey to be convened
2. Cause a formal survey to be convened
3. Forward the findings to the supply officer for a decision
4. Forward the findings to the commanding officer for a decision

Assignment 2

Supply and Publications; Aircraft Electrical Control and Distribution; Air Data Computer Systems

Text: Pages 33 - 74

Learning Objective: Recognize contents, uses, titles, and identification numbers of maintenance publications and related microfilms.

2-1. You should look in what manual to find the microfilm cartridge number when the publication number is known?
1. NAVAIR 00-500M Part I
2. NAVAIR 00-500M Part II
3. NAVSUP 2002 Section I
4. NAVSUP 2002 Section II

2-2. A MIARS microfilm cartridge is numbered SE1.450(c). What does (a) the number 450 and (b) the letter c mean?
1. (a) Intermediate level maintenance
   (b) Third revision
2. (a) Intermediate level maintenance
   (b) Confidential
3. (a) Organizational level maintenance
   (b) Third revision
4. (a) Organizational level maintenance
   (b) Confidential

2-3. You are bench checking an electronic set in an intermediate maintenance activity and you question the performance of one section of the set. In order to determine whether the performance is acceptable, you should consult the
1. Organizational section of the Maintenance Instructions Manual
2. Specifications section of the Illustrated Parts Breakdown
3. Organizational section of the Operation and Service Instruction Manual
4. Specifications section of the Operation and Service Instruction Manual

2-4. Which section of an equipment's Operation and Service Instruction Manual normally contains complete alignment procedures for the equipment?
1. The organizational maintenance section
2. The intermediate maintenance section
3. The depot maintenance section
4. The troubleshooting section

2-5. Which of the following technical directive codes applies to avionics?
1. 01-2Y-61
2. 02-2Y-62
3. 10-2Y-63
4. 12-2Y-64

2-6. Which of the following statements is correct concerning Changes and Bulletins applicable to aeronautical equipment?
1. Both relate to operational features, but a Bulletin always involves a change kit of parts
2. Both relate to operational features, but a Change always involves a change kit of parts
3. A Change results in alteration of physical appearance or installation of equipment; a Bulletin is an interim document, comprised of instructions and information
4. A Bulletin results in alteration of physical appearance or installation of equipment in an aircraft; a Change is an interim document comprised of instructions and information

2-7. A minor change can be made to a directive already issued by the issuance of a/an
1. Revision
2. Bulletin
3. Amendment
4. Interim Change

2-8. Which of the following technical directive action categories is concerned with procedural deficiencies of material, tactical in nature, that if uncorrected could constitute a hazard?
1. Routine
2. Record purpose
3. Urgent
4. Immediate

2-9. Of the various Electronics Installation and Maintenance (EIMB) handbooks, which one is of special interest to the AE?
1. Test Methods and Practices
2. EMI Reduction
3. Test Equipment
4. Reference Data

2-10. The publication Basic Theory and Application of Transistors contains information on transistor usage applicable to all of the following EXCEPT
1. amplifiers
2. oscillators
3. switching circuits
4. carbon pile voltage regulators

2-11. Which of the following chapters of Navy Safety Precautions for Forces Afloat (OPNAVINST 5100.19) is of special interest to the AE?
1. Chapter 1
2. Chapter 2
3. Chapter 3
4. Chapter 5

2-12. It should be borne in mind that the principal reason for maintaining a technical library is to
1. ensure that all publications are kept current
2. make available to maintenance personnel the publications contained therein
3. ensure that the command receives all pertinent technical publications
4. provide teaching material by which senior electricians may train juniors

2-13. What is the number of the form used to report errors in technical publications?
1. OPNAV 4790/47
2. OPNAV 4790/36
3. OPNAV 4790/36A
4. OPNAV 4790/35

Learning Objective: Indicate advantages of polyphase power in aircraft, and recognize how generator frequency and voltage are controlled.

2-14. Polyphase electrical power in aircraft is advantageous over older systems in that
1. less power per system is consumed
2. components have 60% longer life cycles
3. fewer units per system are needed
4. components are smaller and lighter

2-15. Frequency of an aircraft's generator is a function of
1. voltage regulation
2. generator speed
3. engine speed
4. load control

2-16. Recently developed models of aircraft obtain their constant-frequency ac power from constant-speed engine-driven ac generators. Which of the following devices is the AE required to understand as a direct result of this development?
1. The carbon-pile voltage regulators used with such generators
2. The frequency controls used with such generators
3. The carbon-pile speed regulators used with such generators
4. Inverters

2-17. On the A-4E aircraft, generator frequency is controlled by
1. a slip clutch
2. controlled compressed air
3. an electrical frequency-sensing device
4. a mechanical transmission

Refer to figure 3-1 in answering items 2-18 through 2-21.

2-18. Note the series circuits associated with CR1, CR2, and T1. A change in generator frequency causes higher impedance in one circuit and lower impedance in the other because
1. the secondaries of T1 have different couplings to the primary
2. C1 and C2 have different capacitances
3. the circuits have different resonant frequencies
4. CR1 and CR2 have different resistances

2-19. A change in generator output frequency is sensed by
1. the saturable reactor bridge
2. the interaction of voltage across the secondaries of T1
3. the resonant network whose resonant frequency is approached by the changing signal
4. both the resonant networks simultaneously

2-20. Which statement is correct relative to system reaction when generator frequency increases?
1. The impedance of L2-C4 increases
2. The prime mover speed governor setting is raised
3. DC current flows upward through the control winding
4. Current flows through SR2 and SR3

2-21. **Assume a decreasing line frequency. Which statement correctly describes the circuit action?**
1. Current through the secondaries of T1 is held constant by CR1 and CR2, but the tendency of current to change through the saturable reactors causes the motor speed to vary
2. Current increases through both CR1 and CR2; current flows in a clockwise direction from CW1 to CW2; impedance increases in all four saturable reactors
3. Current decreases through CR1 and increases through CR2; impedance increases in two saturable reactors and decreases in two
4. Current increases through CR1 and decreases through CR2; impedance increases in two saturable reactors and decreases in two

- Refer to figure 3-2 in answering items 2-22 through 2-26.

2-22. What function is the voltage regulator in the highest-phase takeover sensing circuit designed to accomplish?
1. To maintain a constant voltage across capacitor C101
2. To maintain a constant voltage across the Zener diodes
3. To prevent transistor breakdown by limiting base-to-emitter voltages
4. To ensure that each amplifier gate winding delivers an equal share of the amplifier output current

2-23. What is the purpose of L105 and C203?
1. To filter ripple voltage from the base of Q102
2. To compensate for temperature change
3. To ensure equal conduction of Q1 and Q2
4. To filter the regulator's output voltage

2-24. Which of the following statements regarding C101 is correct?
1. The charge on C101 remains slightly higher than the output of L104
2. The charge on C101 remains slightly lower than the output of L104
3. The charge on C101 is the voltage regulated by the regulator
4. The charge on C101 is approximately one-half the regulator's output voltage

2-25. When the 3-phase line voltage increases 2 volts, what error signal voltage is applied to transistors Q101 and Q102 in order to reduce line voltage to its previous value?
1. 2.00 v and 0.32 v respectively
2. 1.68 v and 2.00 v respectively
3. 1.68 v and 0.32 v respectively
4. 0.32 v and 2.00 v respectively

2-26. What is the purpose of resistors R106 and R107?
1. To provide RC coupling to Q101 and Q102
2. To maintain temperature stabilization
3. To prevent inductive kickback through CR107 and CR108
4. To keep Q101 and Q102 in cutoff until a signal is applied

Learning Objective: Relative to circuit protectors, recognize their functions and conditions of use.

2-27. Dual-function electrical power protection devices are advantageous over single-function devices in that they
1. permit undamaged portions of a system to continue functioning
2. automatically reset after a fault is cleared
3. automatically energize redundant circuitry to replace faulty circuitry
4. indicate in what portion of a system a fault occurred

2-28. Of the following aircraft equipment, which is most likely connected to an electrical system which is protected by a single-function protective device?
1. Bomb director computer
2. Landing lights
3. Bomb bay lights
4. Instrument lights

2-29. Refer to figure 3-3. Which of the following statements is correct concerning the use of the protectors?
1. (A) is used for category 1 equipment;
   (B) is used for categories 2 and 3 equipment
2. (A) appears in all three phases of a system;
   (B) appears in only one phase of a system
3. (A) appears in only one phase of a system;
   (B) appears in all three phases of a system
4. Both (A) and (B) appear in all three phases of a system

Refer to figure 3-4 in answering items 2-30 and 2-31.

2-30. Which statement is correct concerning the operation of the circuit?
1. An overvoltage causes increased rectifier current to flow through the ac power contractor
2. An overvoltage increases T1's reactance so that circuit current is too small to maintain the trip relay closed
3. An overvoltage causes the ac power contactor to chatter
4. An overvoltage causes the ac power contactor to lose its dc actuating voltage

2-31. When an overvoltage occurs, what prevents the trip relay from cycling the generator on and off the line?
1. The spring load on the movable relay contact
2. The ac voltage from T1
3. The constant 28v across the trip relay coil.
4. Removal of the 28v from the circuit

2-32. Mechanical speed-switches for underfrequency protection are used under which of the following conditions?
1. When the generator is a relatively slow-turning device
2. When the generator is a relatively fast-turning device
3. When accurate frequency protection is not essential
4. When accurate frequency protection is essential

2-33. In the underfrequency protector illustrated in figure 3-6 of your textbook, what effect does C1 and L1 have on the operation of the unit as generator speed increases and approaches operating frequency?
1. The impedance of the LC circuit increases, and more voltage appears across the trip relay coil
2. The impedance of the LC circuit decreases, and more voltage appears across the trip relay coil
3. The impedance of the LC circuit decreases, and less voltage appears across the trip relay coil
4. The impedance of the LC circuit increases, and less voltage appears across the trip relay coil

2-34. Refer to figure 3-7. Which of the following conditions must exist in order for the external power contactor to close?
1. The POS SEQ relay must be energized, NEG SEQ relay deenergized
2. The NEG SEQ relay must be energized, POS SEQ relay deenergized
3. Both SEQ relays must be energized
4. Both SEQ relays must be deenergized

Learning Objective: Point out features of P-3C power distribution, and circuit trace through a schematic to determine given conditions.

2-35. Refer to table 3-1. Which of the following units is powered from the flight essential bus?
1. LH pitot heater
2. Fuel crossfeed control
3. Computer
4. Empennage deicing

2-36. Which of the three transformer rectifiers can supply power to the entire aircraft?
1. No. 1 only
2. No. 2 only
3. No. 1 and No. 2
4. No. 1 and No. 3

Refer to figure 3-8 in answering items 2-37 through 2-39.

2-37. Which of the following statements is correct relative to engine starting?
1. The GROUND OPERATION DC BUS must be hot for engine starting, even when airborne
2. Engine starting requires three power sources: electrical, pneumatic, and hydraulic
3. Engine starting requires two power sources, electrical and pneumatic
4. In an emergency, engines can be started with the battery as the only source of power

2-38. Which of the following power parameters must be within given tolerance(s) before transfer relay No. 4 will energize?
1. Frequency only
2. Voltage only
3. Phase relationship only
4. Voltage, frequency, and phase relationship

2-39. In normal operation, the MONITORABLE ESSENTIAL DC BUS receives its power from
1. TR3
2. the battery
3. the flight essential dc bus
4. the start essential dc bus

2-40. Of the four generators aboard, which ones can power the entire electrical load by themselves?
1. Any generator
2. No. 2 or No. 3 generators only
3. No. 2, No. 3, or APU generators only
4. No. 3 or APU generators only

2-41. In order for the APU to power all the ESSENTIAL ac and dc buses, which of the following relays must be energized?
1. Run-around relay 2 only
2. Run-around relay 2 and the essential ac bus relay 2
3. Run-around relay 2, transfer relay 4, and essential ac bus relay 2
4. Transfer relay [illegible] and 7, and run-around relay 2

2-42. When the No. 4 and APU generators are the only ones available, which of the following is a correct statement?
1. Generator 4 supplies MAIN AC BUS A, and the APU generator supplies MAIN AC BUS B
2. Generator 4 supplies MAIN AC BUS B, and the APU generator supplies MAIN AC BUS A
3. Generator 4 supplies the entire electrical load, and the APU generator is on standby
4. The APU generator supplies the entire electrical load, and generator 4 is on standby

2-43. In attempting to isolate an electrical fire, the A bus monitoring switch is turned to OFF. This results in loss of power to
1. main ac bus B
2. main ac bus A
3. the monitorable essential ac bus
4. the monitorable essential dc bus

Learning Objective: Recognize facts relevant to functions of an air data computer system, including input and output quantities and terminology.

2-44. The pneumatic output supplied by the air data computer for instrument use represents the corrected value of which of the following?
1. Total pressure
2. Impact pressure
3. Pitot pressure
4. Static pressure

2-45. What type of computer outputs are used to represent true airspeed, Mach number, and impact pressure?
1. Electrical and pneumatic
2. Pneumatic only
3. Electrical only
4. Pitot-static

2-46. What are the four data inputs to the air data computer?
1. Impact pressure, total temperature, indicated static pressure, and true angle of attack
2. Impact pressure, true temperature, indicated static pressure, and indicated angle of attack
3. Total pressure, total temperature, indicated static pressure, and indicated angle of attack
4. Impact pressure, total temperature, indicated static pressure, and indicated angle to attack

2-47. Refer to table 4-1 in your textbook. The symbol associated with impact pressure is
1. Hp
2. Pt
3. Qc
4. Psi

2-48. The CADC is basically what type of computer?
1. Electromechanical analog
2. Electromechanical digital
3. Electrical analog
4. Electrical digital

2-49. Static pressure errors become a significant factor at what relative speed(s)?
1. Supersonic only
2. Transonic only
3. Subsonic and supersonic
4. Supersonic and transonic

2-50. The two pressures which when added are equal to total pressure are
1. pitot pressure and impact pressure
2. static pressure and the pressure created by the motion of the aircraft
3. pitot pressure and the pressure created by the motion of the aircraft
4. impact pressure and the pressure created by the motion of the aircraft

2-51. The two temperatures which make up total temperature are
1. ambient plus the engine intake ram air
2. ambient plus the temperature increase created by the motion of the aircraft
3. ambient plus the temperature decrease created by the surrounding air
4. ambient plus the ratio of ram air external to the aircraft and engine intake ram air temperatures

2-52. The reference for the angle-of-attack probe is the
1. aircraft's wing axis
2. aircraft's longitudinal datum line
3. earth's magnetic lines of force
4. ground directly below the aircraft

Learning Objective: Correlate symbols with the functions of an ADC represented by the symbols, and recognize principles of operation of the static pressure compensator (SPC).

2-53. The two variables that cause the most significant errors in indicated static pressure as detected by the aircraft static ports are Mach number and
1. angle of attack
2. airspeed
3. total temperature
4. ambient temperature

2-54. The purpose of the static pressure compensator (SPC) is to
1. produce true pitot-static pressure
2. compensate for static pressure errors caused by temperature changes
3. produce true static pressure
4. produce true total pressure

2-55. The purpose of the SPC failsafe circuitry is to
1. block off the indicated static line and vent the SPC case to cabin air if the SPC fails
2. block off the indicated static line and vent the SPC case to the auxiliary static port if the SPC fails
3. block off the indicated static line and connect the auxiliary static line to the true static load lines if the SPC fails
4. connect the indicated static line directly to the true static load lines if the SPC fails

Refer to figure 4-6 in answering items 2-56 through 2-58.

2-56. The beam is balanced when the
1. force Po is equal to the force at point B and the force Psi is equal to the force at point A
2. fulcrum is midway between points A and B and gage pressure (Pg) is equal to vacuum pressure (Pv)
3. force at point B times the distance from point A to the fulcrum is equal to the force at point A times the distance from point B to the fulcrum
4. force at point B times the distance from point B to the fulcrum is equal to the force at point A times the distance from point A to the fulcrum

2-57. The purpose of Mach function cams f1 and f2 is to
1. position the C potentiometer of the angle-of-attack transmitter
2. trip the failsafe circuitry when the aircraft exceeds its Mach limit
3. position potentiometers R36 and R32
4. position variable resistors R33 and R37

2-58. The difference in potential between the wipers of potentiometers R32 and R36 is zero at Mach
1. 1.5
2. 1.0
3. 0.94
4. zero

2-59. Which of the following statements is correct concerning the operation of the SPC failsafe circuitry?
1. A beam unbalance lasting 0.4 second will have no effect on SPC operation
2. If 115 vac is interrupted for 0.2 second the SPC failsafe solenoid deenergizes
3. If 28 vdc is interrupted for 0.2 second the SPC failsafe solenoid deenergizes
4. Relay K3 deenergizes on all power interruptions

Learning Objective: Recognize functions and principles of operation of the pressure ratio transducer (PRT) and the logarithm pressure controller (LPC).

● Items 2-60 through 2-66 pertain to the pressure ratio transducer (PRT) shown in figure 4-8.

2-60. The Mach output of the PRT is derived from
1. Pt inputs only
2. Ps inputs only
3. Ps and Pt inputs
4. LnPs and Pt inputs

2-61. Ps enters the case of the pressure ratio sensor and applies a force corresponding to Ps at one end of the beam by acting through the evacuated bellows, while Pt is ported to one side of a differential bellows which applies a force at the other end of the beam. The force applied to the beam by the differential bellows corresponds to what pressure?
1. Pt
2. Pt - Ps
3. Ps + Po
4. Pt - Po

2-62. When the beam is unbalanced, the voltage induced in the pickup winding nearest the beam is greater because
1. the magnetic circuit consisting of the exciter core, the beam, and the near pickup winding core has a greater reluctance
2. the magnetic circuit consisting of the exciter core, the beam, and the far pickup winding core has a greater permeance
3. the permeance in both pickup winding cores is greater
4. the magnetic circuit consisting of the exciter core, the beam, and the near pickup winding core has a greater permeance

2-63. The signal voltage, which is the output of the pickup coils, is equal to the
1. difference between the voltages induced in the pickup windings
2. sum of the voltages induced in the pickup and exciter windings
3. difference between the absolute values of the voltages induced in the two pickup windings
4. amplitude of the larger voltage of the pickup windings

2-64. In addition to driving the jackscrew to reposition the fulcrum, the servomotor also drives the
1. E-core transformer
2. evacuated bellows
3. device which provides the error signal input to the PRT
4. tachometer-generator

2-65. The direction in which the servomotor rotates is determined by the
1. direction of rotation of the tachometer-generator
2. phase of the error signal
3. magnitude of the error signal
4. magnitude of the tachometer-generator output

2-66. How is the beam balanced by the forces within the PRT?
1. They cause repositioning of the fulcrum until the beam is balanced
2. They adjust Ps until the beam is balanced
3. They adjust Pt until the beam is balanced
4. They adjust the differential bellows until the beam is balanced

● Items 2-67 through 2-73 pertain to the logarithm pressure controller (LPC).

2-67. The outputs of the LPC have the forms of
1. two mechanical shaft positions and two electrical synchro signals
2. three mechanical shaft positions and two electrical synchro signals
3. one mechanical shaft position and two electrical synchro signals
4. two mechanical shaft positions and three electrical synchro signals

● Refer to figure 4-9 in answering items 2-68 through 2-70.

2-68. The purpose of the linearizing cam in the carriage assembly of the LPC is to compensate for the slight nonlinearity in the natural logarithm of
1. static pressure (LnPs) with indicated pressure changes (LnPsi changes)
2. indicated static pressure (LnPsi) with altitude changes
3. static pressure (LnPs) with altitude changes
4. indicated static pressure corrected for airspeed errors

2-69. A Ps shaft output is derived from LnPs shaft rotation by the Ps shaft being driven by the LnPs shaft through
1. a pair of antilog gears
2. a pair of analog synchro rotors
3. one antilog gear and one analog synchro rotor
4. a pair of log-log gears

2-70. The incremental change in LnPs (ΔLnPs) output is used in
1. missile control
2. fire control
3. automatic flight control
4. radar antenna stabilization

2-71. The altitude encoding unit (AEU) has a digital output which is supplied to the
1. IFF
2. AFCS
3. CADC
4. SPC

2-72. Refer to figure 4-4. What is the purpose of the digitizer in the altitude encoder unit?
1. It converts analog to digital
2. It converts digital to analog
3. It reverts altimeters to Ps pneumatic inputs if AEU fails
4. It turns the receiver/transmitter coder off if AEU fails

2-73. Which of the following statements is correct concerning the pressure input to the LPC?
1. The pressure input is Psi while the SPC is operating
2. The pressure input is Psi if the SPC fails
3. The pressure input is supplied by the altitude hold diaphragm
4. There is no pressure input if the SPC fails or is turned off

Assignment 3

Air Data Computer Systems; Attitude/Heading Reference Bombing Computer Systems

Text: Pages 75 - 121

Learning Objective: Recognize functions and principles of operation of the Tt and TAS servo assembly, Mach sector assembly, and the computer gearbox modules.

- Items 3-1 through 3-3 pertain to the total temperature (Tt) and true airspeed (TAS) servo assembly module.

3-1. Total temperature as sensed by the total temperature sensor is the sum of ambient temperature and the temperature produced by
1. deceleration of the air flowing into the probe
2. expansion of the air flowing into the probe
3. acceleration of the air flowing into the probe
4. aircraft skin friction with the air

- Refer to figure 4-12 in answering items 3-2 and 3-3.

3-2. The two reference signals applied to the TAS bridge are
1. Mach and absolute temperature
2. Ps/Pt and ambient temperature
3. Mach and total temperature
4. Ps and total temperature

3-3. The component which provides the TAS servoamplifier with an input which is determined by the position of the TAS output shaft is
1. R29
2. R30
3. R31
4. R60A

- Refer to figure 4-13 in answering items 3-4 through 3-7.

3-4. As indicated in table 4-2, the purpose of potentiometers R32 and R36 in the Mach sector assembly module is to
1. furnish Mach information to the TAS bridge and amplifier
2. supply Mach correction information for ultimate use in the SPC
3. Supply Mach correction information to the angle-of-attack indicating system
4. supply Mach information to the true airspeed servoamplifier

- Items 3-5 and 3-6 pertain to the computer gearbox module.

3-5. The computer gearbox performs mechanical computation in response to PRT and LPC inputs of
1. Ps/Pt, Ps, and LnPs
2. Ps/Pt, Ps, and Ln(Qc/Ps)
3. Mach, LnPs, and ΔLnPs
4. Mach, ΔLnPs, and LnQc shafts

3-6. The output of resistor R-21 in the potentiometer assembly is an electrical signal proportional to
1. Ps
2. Ps/Pt
3. LnPs
4. LnPs/Pt

3-7. What function does synchro transmitter B3 perform?
1. It supplies the AFCS with Mach-hold information when L8 is deenergized
2. It holds the aircraft at the altitude selected by the AFCS
3. It supplies the AFCS with Mach signals which correspond to deviations from the AFCS Mach-hold engage reference
4. It positions the Mach indicator to 0.9 Mach

Learning Objective: Recognize aspects of ADC system maintenance, including maintenance limitations and performance testing.

3-8. Which of the following test sets supplies pitot and static pressure inputs for testing air data computers?
1. TTU-205 B/E
2. SM-355/ASM-62
3. TS-2357/ASM-269A
4. TTU-229/E

3-9. Generally, the proper order in which the computer function tests should be performed is
1. pneumatic leak test, static pressure compensator check, and potentiometer and switch checks
2. static pressure compensator check, pneumatic leak test, and potentiometer and switch checks
3. pneumatic leak test, potentiometer and switch checks, and static pressure compensator check
4. potentiometer and switch checks, static pressure compensator check, and pneumatic leak test

---

Learning Objective: Point out features of the AN/AJB-7 reference bombing system and the functions of its components, including modes of operation and bombing procedures/

3-10. An attitude reference bombing computer system is composed of
1. a low altitude bombing system only
2. a display, radar lock-on, and bomb release system
3. an all-attitude display system only
4. a low altitude bombing system and an all-attitude indicating or display system

3-11. The all-attitude display indicator indicates to the pilot any pitch, roll, or azimuth movement of the aircraft through a maximum of
1. 90°
2. 180°
3. 270°
4. 360°

In items 3-12 through 3-14, select from column B the equipment that supplies each reference information listed in column A.

	A. Reference Information	B. Equipment
3-12.	Azimuth	1. Flux valve
3-13.	Rate-of-turn	2. Vertical gyro
3-14.	Pitch and roll (PRIM)	3. Geocentric vertical flight reference set
		4. Rate gyro transmitter

In items 3-15 through 3-17, select from column B a feature of each of the bombing modes listed in column A.

	A. Bombing Modes	B. Features
3-15.	Loft	1. Bomb releases as soon as the pickle button is depressed
3-16.	Timed over-the-shoulder	2. Uses a low-angle release
3-17.	Instantaneous over-the-shoulder	3. Uses a high-angle release and an identification point
		4. Has no timed interval or identification point

3-18. A voltage proportional to an acceleration perpendicular to the longitudinal axis of the aircraft is supplied to the flight director bombing computer by an
1. attitude reference group
2. accelerometer
3. amplifier power supply
4. indicator power supply

3-19. Refer to figures 5-1 and 5-2. During a loft bombing run, the sphere of the attitude indicator is predominantly white, indicating that the aircraft is in a
1. roll
2. sharp turn
3. steep climb
4. steep dive

3-20. An aircraft is flying with the AN/AJB-7 in the slaved mode. The inherent compass transmitter inaccuracies are counterbalanced by
1. 24 capacitors in the attitude reference group
2. 24 potentiometers in the compass adapter-compensator
3. 24 potentiometers in the compass system controller
4. 24 capacitors in the heading reference group

3-21. Which of the following components in the AN/AJB-7 system provides the emergency source of azimuth information in the compass mode?
1. Vertical gyro
2. Flux valve
3. Displacement gyro
4. Directional gyro

3-22. The remote attitude and standby attitude indicators differ from the attitude indicator in that the attitude indicator displays pitch, roll, and azimuth while the remote attitude and standby attitude indicators display
1. pitch and roll
2. roll only
3. azimuth and roll
4. pitch only

3-23. The unit that minimizes vertical gyro errors and azimuth slaving errors when the aircraft rate-of-turn is greater than 15° per minute is the
1. compass transmitter
2. switching rate gyroscope
3. rate gyroscope transmitter
4. displacement gyroscope assembly

3-24. The gyroscope gimbals should NOT be operated in FAST ERECT longer than one minute because the
1. vertical flight reference set may be damaged
2. attitude indicator cannot respond longer to such a rapid change in displacement
3. displacement gyroscope leveling torquers may be damaged
4. displacement gyroscope gimbals may freeze

In items 3-25 through 3-27, select from column B the equipment that supplies the signals for each of the modes listed in column A.

A. Modes	B. Equipment
3-25. Compass	1. Both directional gyro and flux valve
3-26. Directional gyro	2. Flux valve only
3-27. Slaved	3. Directional gyro only
	4. Both leveling torquer and flux valve

Learning Objective: Recognize operational theory of the AN/AJB-7, particularly of the displacement gyroscope assembly and the units that are affected by it.

3-28. The displacement gyroscope assembly is composed of all of the following components EXCEPT
1. pickoffs and gyro torquers
2. interacting gimbals and servo loops
3. a directional and a vertical gyroscope
4. leveling amplifiers

3-29. What prevents the vertical gyro gimbal from spinning about the pitch axis in gimbal lock?
1. Electrical stops for the inner roll gimbal
2. Electrical stops for the outer roll gimbal
3. Mechanical stops for the inner roll gimbal
4. Mechanical stops for the outer roll gimbal

3-30. After the spin axis of the vertical gyro has reached gravity-vertical, any deviation from this position will be corrected by
1. the caging circuit which maintains the gyro at gravity-vertical
2. electrolytic switches that activate torquers which return the gyro back to gravity-vertical
3. the directional gyro leveling servo loop which erects the spin axis
4. photocells that activate a leveling modulator which drives the torquers to return the gyro back to gravity-vertical

3-31. Which of the following statements correctly describes the output of the leveling modulator during gyro leveling once the photocells receive equal amounts of light?
1. The small output is amplified and used to drive the gyro spin motor
2. The large output is amplified and used to drive the gyro spin motor
3. The small output is used to drive the leveling torquers
4. There is no output

3-32. In an indicator roll servo loop, the roll attitude reference signal is obtained from the
1. inner gimbal control transformer
2. displacement gyro outer roll gimbal control transmitter
3. outer roll gimbal control amplifier
4. outer roll potentiometer on the inner roll gimbal

3-33. When a pilot must assume a positive angle of attack for a constant cruise altitude, he will adjust the
1. pitch trim control for 90° pitch indication on the sphere of the attitude indicator
2. roll potentiometer for 90° roll indication on the sphere of the attitude indicator
3. pitch trim control for zero pitch indication on the sphere of the attitude indicator
4. roll potentiometer for zero roll indication on the sphere of the attitude indicator

3-34. When a pitch trim setting has been made and the aircraft goes into a dive, the effects of the trim setting are removed from the attitude indicator by action of the pitch
1. control transmitter
2. trim fade circuit
3. control transformer
4. motor generator

3-35. In the DG mode of operation, what information is displayed on the attitude indicator sphere?
1. Azimuth
2. Roll only
3. Pitch only
4. Roll and pitch

3-36. Real drift in the directional gyro is compensated for by adjusting the
1. LAT control
2. N-S switch
3. BIAS DEG/HR control
4. compass controller

3-37. The purpose of the AGC circuit during the slave mode of operation is to
1. reduce the input frequency of 800 Hz to a phase-sensitive signal of 400 Hz
2. compensate for a phase difference of 90° in the compass control transformer
3. compensate for real and apparent drift
4. provide a relatively constant overall sensitivity to changing magnetic intensity levels

3-38. While the speed decreaser is energized, causing a gear ratio of 12 to 1, the azimuth slewing speed and direction are dependent upon the
1. speed and direction the flux valve is rotating from magnetic north
2. distance and direction the SET HDG knob is turned from center
3. direction and distance the SYNC knob is turned from center
4. synchronization speed and direction of the directional gyro

---

Learning Objective: Recognize operating principles of the reference bombing system, including display indications during preflight and bombing runs.

In items 3-39 through 3-45, assume that the switches on the bomb control panel are positioned to LABS, READY, and LOFT.

3-39. During a preflight of the LABS system, you depress the pickle button and find the flight director pointers are properly centered on the attitude indicator but there is no 1200-Hz tone in your headset. Which of the following may be malfunctioning?
1. Attitude indicator
2. Flight director bomb computer
3. Interval timer
4. Pickle switch

3-40. What g signal must be maintained to keep the horizontal flight director pointer centered on the attitude indicator until inverted flight is reached?
1. 6 g
2. 2 g
3. 8 g
4. 4 g

3-41. The vertical flight director pointer is controlled by the
1. gimbal action in the displacement gyroscope assembly
2. flux valves located in the tip of each wing
3. g programer immediately after pullup
4. release angle computer servo loop

3-42. In the displacement gyroscope, the inner roll gimbal will sense pure yaw and the azimuth gimbal will sense pure roll whenever the aircraft reaches an angle of
1. 45° roll
2. 45° pitch
3. 90° roll
4. 90° pitch

3-43. Refer to figure 5-11. When the aircraft is at 90° pitch, what are the inputs to the roll stator on the yaw-roll resolver?
1. Minimum roll signal and maximum azimuth signal
2. Maximum roll signal and minimum azimuth signal
3. Maximum pitch signal and minimum roll signal
4. Minimum pitch signal and maximum roll signal

3-44. The roll and azimuth error signals are mixed together and applied to the vertical director pointer as one high sensitivity error signal because
1. the attitude indicator has only two pointers, and the vertical indicator is used for yaw errors
2. the autopilot responds only to a combined signal
3. the pitch error signal is always less than the combined signals, and gives a release signal more quickly
4. both error signals can be corrected by the same type maneuver of the aircraft

3-45. During pullup in a loft maneuver, the automatic bomb release may be deactivated at any time by
1. releasing the pickle button only
2. yawing the aircraft more than 30° only
3. maintaining the flight director pointers at zero
4. yawing the aircraft more than 30° or releasing the pickle button

---

Learning Objective: Relative to the AN/ASN-70 vertical flight reference set, indicate its composition, purpose, operating principles, and maintenance considerations.

3-46. True heading used by the flight director computer is converted from magnetic heading within the
1. amplifier computer
2. control amplifier
3. programmer
4. heading synchro

3-47. The vertical flight reference set is composed of
1. a vertical flight reference sensor only
2. a vertical flight reference computer only
3. a vertical flight displacement gyroscope and a vertical flight reference sensor
4. a vertical flight reference computer and a vertical flight reference sensor

3-48. The vertical flight reference set is designed to compute
1. flightpath angle and vertical velocity
2. vertical acceleration and coordinate position
3. true airspeed and rate of turn
4. roll and pitch

3-49. Longitudinal accelerations occur as the aircraft airspeed changes. A change in which of the following will NOT result in airspeed changes?
1. Pitch attitude
2. Engine power setting
3. Circuit calibration
4. Flight configuration

3-50. If longitudinal accelerations of an aircraft increase, the vertical sensor of the reference set will be maintained vertical by the
1. acceleration of the pendulum in swinging backward
2. acceleration of the pendulum in swinging forward
3. spin motor accelerating proportionally to the acceleration
4. spin motor decelerating proportionally to the acceleration

3-51. If an aircraft's turn rate increases while its airspeed decreases, what will be the effect, if any, on the angular momentum of the spin motor?
1. It will decrease
2. It will increase
3. It will remain the same
4. It will alternately increase and decrease

3-52. The speed of the pendulum spin motor is controlled by the output of the airspeed potentiometer in the air data computer, and spin motor speed accuracy is maintained by a feedback signal from a
1. servo amplifier
2. spin motor speed pickoff
3. pendulum rotor
4. speed control calibration adjustment resistor

3-53. The two erection systems utilized in the vertical gyro are the
1. initial and pendulum systems
2. electrolytic and pendulum systems
3. precise and initial systems
4. electrolytic and precise systems

- Refer to figure 5-16 in answering items 3-54 through 3-56.

3-54. The primary of roll pendulum pickoff A201 is excited by
1. phase A-90° and phase A
2. phase A-90° only
3. phase A only
4. the pendulum pitch torquer

3-55. Earth profile errors are corrected in the vertical gyro by signals representing
1. phase A and phase A-90° signals
2. phase A-90° signals only
3. pendulum pickoff signals
4. resolved airspeed

3-56. By phasing chopper A16Q3 to the pitch erection channel reference signal, the vertical gyro pitch gimbal is driven in the amount and direction necessary for correction of the
1. magnetic variations in the earth field
2. manufactured inaccuracies inherent in the gyro
3. speed at which the aircraft follows the earth's curvature
4. gravitational effects on the aircraft

3-57. The flightpath angle of the aircraft is computed by
1. comparing the vertical velocity to the airspeed along the velocity vector
2. comparing the outer roll gimbal to the vertical gyro pitch gimbal
3. adding the pitch output signals to the velocity vector
4. subtracting the pitch output signals from the velocity vector

- Refer to figure 5-18 in answering items 3-58 and 3-59.

3-58. The output signal on the sine potentiometer is which of the following?
1. An ac signal
2. A dc signal
3. A pulsating dc signal
4. A rectified dc signal

3-59. How is a signal developed to correct the vertical velocity output of summing amplifier A10A3?
1. The sine potentiometer is rotated through an angle of 90°
2. The sine potentiometer is rotated through an angle of 45°
3. Computed altitude is compared with barometric altitude
4. Computed altitude is added to barometric altitude

3-60. If the vertical flight reference set fails the BIT check, all of the following must be removed for repair and calibration EXCEPT the
1. reference set
2. sensor
3. spin motor
4. computer

In answering items 3-61 through 3-63, select from column B the function of each of the circuits listed in column A.

	A. Circuits	B. Functions
3-61.	Start cycle relay circuits	1. Initially erects the gyro to a spin axis vertical position
3-62.	Pendulum erection circuits	2. Assumes erection control 60 seconds after power application
3-63.	Electrolytic erection circuits	3. Controls power to the vertical gyro and the gyro erection circuits
		4. Delays erection control for 45 seconds after power application

Assignment 4

Inertial Navigation; Automatic Flight Control System

Text: Pages 122 - 160

Learning Objective: Recognize fundamentals of navigation, and of the inertial navigator, in single- and two-axis detection, and indicate the mathematics involved and related terminology.

4-1. The two basic categories into which navigational methods can be divided are
1. compass and dead reckoning
2. celestial and position fixing
3. position fixing and dead reckoning
4. celestial and inertial

4-2. Dead reckoning is the process whereby position is calculated from known data of
1. previous position, course, speed, and elapsed time
2. previous position, course, and elapsed time
3. course, speed, and elapsed time
4. previous position, course, and speed

4-3. The inertial navigator is a unique navigating system in that it
1. produces its own electrical power
2. relies on information external to the vehicle
3. is independent of wind or vehicle attitude
4. beams a laser signal to navigational satellites

4-4. Where can a true inertial system exist?
1. In any space beyond the influence of the earth's gravity
2. In any space where there is no atmosphere
3. In empty space beyond the influence of all gravity forces
4. In any nonrotating empty space

4-5. Newton's second law of motion states that
1. a body at rest or in uniform motion will remain at rest or in uniform motion unless some external force is applied to it
2. to every action force there is an equal and opposite reaction force
3. acceleration is proportional to the resultant force and is in the same direction as this force
4. any two bodies attract each other with a force proportional to the product of their masses and inversely proportional to the square of the distance between them

4-6. The term velocity means a given speed in a given direction, and in order for a vehicle to change either its speed or its direction of travel it must experience
1. acceleration
2. drag
3. inertia
4. deviation

4-7. The mathematical process by which acceleration is derived from changes in motion is called
1. integration
2. segregation
3. summation
4. differentiation

4-8. Essentially, what type of device is the inertial navigator?
1. Integrating only
2. Differentiating and integrating
3. Detecting and differentiating
4. Detecting and integrating

4-9. If the integral of acceleration with respect to time is velocity, and the integral of velocity with respect to time is displacement, what is the double integral of acceleration with respect to time?
1. Acceleration
2. Displacement
3. Velocity
4. Position

4-10. The mathematical process of summing all minute values of a variable function over a given time is called
1. integration
2. displacement
3. acceleration
4. differentiation

4-11. An inertial navigating device that has only a single-axis acceleration detector can detect
1. accelerations along a straight line parallel to the sensitive axis of the detector
2. velocity along a straight line parallel to the sensitive axis of the detector
3. accelerations along a straight line perpendicular to the sensitive axis of the detector
4. velocity along a straight line perpendicular to the sensitive axis of the detector

4-12. When an object is undergoing a change in velocity, either positive or negative, the object is experiencing
1. acceleration
2. integration
3. displacement
4. constancy

- Correlate figures 6-1 and 6-2 in answering items 4-13 and 4-14.

4-13. The first integrator (velocity) ceases to produce an output whenever
1. the net sum of detected accelerations is zero
2. acceleration is zero
3. rate of displacement is constant
4. a change in acceleration occurs

4-14. When the first and second integrators cease to produce outputs, the readout device should indicate that the vehicle is
1. at or passing through the point of origin
2. experiencing acceleration
3. experiencing displacement
4. at rest

- Refer to figure 6-4 in answering items 4-15 through 4-17.

4-15. In order for the two-axis inertial navigation system to keep track of the vehicle's position on the plane, orientation of the two accelerometers must be such that their axes are maintained mutually
1. parallel
2. at a 45° angle
3. at a 30° angle
4. perpendicular

4-16. If the vehicle is traveling along the x-axis while experiencing a 2-g acceleration, what values of acceleration will the x and y accelerometers detect?
1. 0 and 2 g, respectively
2. 1 g and 2 g, respectively
3. 2 g and 0, respectively
4. 2 g and 1 g, respectively

4-17. If the vehicle is making a turn while moving at constant speed, what acceleration is detected by the accelerometers?
1. Centrifugal acceleration
2. Radial acceleration
3. Constant acceleration
4. Zero acceleration

4-18. In detecting the acceleration of a body, what does an accelerometer actually detect?
1. Velocity due to a change in speed
2. Velocity due to a change in direction
3. The portion of acceleration that occurs along its sensitive axis
4. The component of the forces causing the velocity changes

Learning Objective: Identify operational principles of the basic components that comprise an inertial navigation system, including accelerometers, gyroscopes, integrators, and the stable platform.

4-19. The gyros in the stable element are used for what purpose?
1. To detect vehicular accelerations
2. To integrate detected vehicular accelerations
3. To provide stabilization signals for the stabilized platform
4. To provide directional signals to the navigation system

4-20. Which of the following provides primary data for the inertial navigation system?
1. Analog computer
2. Gyro
3. Schuler pendulum
4. Accelerometer

4-21. How many accelerometers are required in detecting the total acceleration experienced by a vehicle?
1. One
2. Two
3. Three
4. Four

4-22. Refer to figure 6-6. Which of the following statements is NOT correct concerning the output signal of the accelerometer?
1. It is proportional to the pendulum restraining torque
2. It is proportional to the measured acceleration
3. It is taken from the output of a high-gain amplifier
4. It includes acceleration due to gravity

4-23. A device which processes acceleration signals to produce velocity information and then processes the velocity information to obtain distance traveled is called a/an
1. accelerometer
2. integrator
3. potentiometer
4. tachometer

4-24. How many integrators are required in producing an output corresponding to distance (displacement) if the input is acceleration?
1. One
2. Two
3. Three
4. Five

4-25. How is gravitational effect eliminated from the vertical accelerometer's output signal?
1. It is biased from the accelerometer's output within the integrator
2. It is compensated for in the manufacturer's design of the vertical accelerometer
3. It is subtracted from the accelerometer's output by the computer
4. It is counterbalanced by spring tension on the mass

4-26. The stable element in the inertial navigation system is stabilized by
1. one three-degree-of-freedom gyroscope
2. two two-degree-of-freedom gyroscopes
3. three one-degree-of-freedom gyroscopes
4. three two-degree-of-freedom gyroscopes

4-27. Any displacement of the stable element from its frame of reference is detected by the
1. integrators
2. gyroscope leveling torquers
3. gyroscope pickoffs
4. differentiators

4-28. Aircraft heading and attitude information is derived as the
1. angular relationship of the platform gimbals
2. angular relationship of the gyroscope gimbals
3. relative magnitudes of the three attitude pickoff signals from the gyroscopes
4. relative magnitude of the synchro transmitter and receiver signals

4-29. What gyroscopic principle is used in maintaining the stable platform horizontal to the earth?
1. Spin
2. Nutation
3. Precession
4. Rigidity

Learning Objective: Identify the principles and application of pendulous-mass accelerometers, the Schuler principle as applied in maintaining platform orientation, and the role of the gyroscope in maintaining platform stability.

4-30. A pendulum is defined as any pivoted mass that is
1. irregular in shape
2. perfectly balanced
3. imperfectly balanced
4. free to rotate in a circle

4-31. The simple pendulum shown in figure 6-15 illustrates that for equally applied forces, the resultant angular motion will be less when the string is
1. shorter
2. longer
3. tighter
4. knotted

4-32. Consider a hypothetical simple pendulum that has its mass suspended at the center of the earth. What angular motion, if any, with respect to the local gravity vector will the pendulum experience if the suspension point is accelerated horizontally with the earth's surface?
1. Lagging slightly
2. Leading slightly
3. None
4. Circular

4-33. If a pendulum could be constructed to have a period of oscillation of approximately 84.4 minutes, what would its length have to be?

1. 3,440 inches
2. 3,440 feet
3. 3,440 yards
4. 3,440 miles

4-34. Figure 6-16 (C) illustrates a mass pivoted at its center of gravity. This is an example of a pivoted mass that is not a pendulum because

1. its angular motion is infinite
2. it is offbalanced and its oscillation is infinite
3. it is perfectly balanced and its length is 3,440 feet
4. it is perfectly balanced and its length and period of oscillation are infinite

4-35. A limiting factor in constructing a Schuler type pendulum operated entirely by mechanical means is the fact that

1. the earth's radius varies in length between the equator and the poles
2. the earth's radius is not exactly known
3. constructing a pendulum that has a period of 84.4 minutes is extremely difficult
4. altitude changes have an effect on the period of a pendulum

4-36. The frame of reference in which the inertial navigation system operates is a

1. rotating frame which is horizontally aligned in a plane parallel to the surface of the earth, and is oriented to magnetic north
2. rotating frame which is vertically aligned in a plane perpendicular to the surface of the earth, and is oriented to magnetic north
3. rotating frame which is horizontally aligned in a plane parallel to the surface of the earth, and is oriented to true north
4. nonrotating frame which is horizontally aligned in a plane perpendicular to the surface of the earth, and is oriented to true north

4-37. Refer to figure 6-10. The accelerometers which supply the torquing signals to the gyros for leveling the stable element are

1. X and Z only
2. Y and Z only
3. X, Y, and Z
4. X and Y only

4-38. It is necessary that the accelerometers be maintained in a truly horizontal reference plane for all the following reasons EXCEPT

1. the accelerometers cannot distinguish between horizontal acceleration and gravitational acceleration
2. the integrators would develop velocity and distance errors if the platform were not level
3. position errors would develop if the platform were not level
4. the accelerometer outputs must always be zero

4-39. During operation, at what times must the stable platform be maintained in its vertical reference frame?

1. Only when the aircraft is in motion
2. At all times, whether the aircraft is moving over the earth's surface or is stationary
3. Only when the aircraft is stationary in respect to the earth's surface
4. At all times, except at the equator when flying east or west

4-40. Which of the following statements concerning centripetal corrections is correct?

1. They are always necessary on any course that does not exactly coincide with the earth's coordinate great circle routes
2. They are similar to Coriolis corrections in their relationship to the earth
3. If the earth were stationary, centripetal corrections would not be needed
4. They are necessary only when the course is due north-south or directly along the equator

4-41. In what direction will centripetal correction be necessary for the stable elements in two aircraft, A and B, if A is flying east and B is flying west in the northern hemisphere?

1. North for A and south for B
2. South for A and north for B
3. South for both A and B
4. North for both A and B

4-42. Coriolis corrections are necessary in inertial navigation systems because

1. of the earth's motion in orbit around the sun
2. the earth is a rotating reference for the system
3. the earth is not a perfect sphere
4. gravity is not uniform over the earth

4-43. In what manner are centripetal and Coriolis corrections combined on east and west headings in the northern hemisphere?
1. Summed on west heading; the difference of the two on east heading
2. Summed on east heading; the difference of the two on west heading
3. Summed on both headings
4. The difference on both headings

4-44. What accelerometer and gyro combinations make up the north and east Schuler loops, respectively?
1. Vertical accelerometer and north gyro; vertical accelerometer and east gyro
2. North accelerometer and north gyro; east accelerometer and east gyro
3. North accelerometer and east gyro; east accelerometer and north gyro
4. East accelerometer and north gyro; north accelerometer and east gyro

---

Learning Objective: Recognize elements of inertial navigation system alignment and the basic forms of alignment.

4-45. If the integration processes in the inertial navigation system are to be meaningful, there first must be initial conditions set into the system. What are they?
1. Initial velocity and position of the vehicle
2. Initial speed and position of the vehicle
3. Initial course and position of the vehicle
4. Initial course and velocity of the vehicle

4-46. What are three basic forms of external references used in aligning the inertial navigation system?
1. Terrestrial, celestial, and inertial
2. Spherical, celestial, and inertial
3. Terrestrial, spherical, and inertial
4. Terrestrial, celestial, and spherical

4-47. Self-alignment is what basic form of alignment?
1. Celestial
2. Terrestrial
3. Inertial
4. Spherical

4-48. Fine alignment, the process of aligning the platform axes with the computer axes, is done by placing the
1. X accelerometer axis perpendicular to the gravity vector
2. Y accelerometer axis normal to the gravity vector
3. X and Y accelerometer axes mutually perpendicular to the gravity vector
4. Z accelerometer axis perpendicular to the gravity vector

4-49. Refer to figure 6-26. Which statement is correct regarding the loop? The output of the x accelerometer is amplified and applied to the
1. x gyro, and the output of the y accelerometer is applied to the y gyro
2. y gyro, and the output of the x accelerometer is applied to the x gyro
3. y gyro, and the output of the y accelerometer is applied to the x gyro
4. y gyro, and the output of the y accelerometer is applied to the y gyro

4-50. What reference(s) does a north-seeking platform utilize in aligning itself to true north?
1. The earth's rotation and gravity
2. A gyrostabilized magnetic compass system
3. A north seeking gyro
4. Doppler radar and a fluxvalve compass

4-51. Why is it more difficult to align an aircraft's inertial navigation system at sea than on a fixed earth base?
1. Because the ship's position is not known as exactly as is the earth base's position
2. Because the ship's inertial navigation reference system embodies conventional pendulum principles rather than the Schuler principle
3. Because the accelerometers on the ship, being remotely located from the aircraft, do not experience the same accelerations as those on the aircraft
4. Because ships use magnetic references

Learning Objective: Identify types and operating principles of various inertial navigation systems.

4-52. Inertial navigation systems can be broadly categorized under two types known as
1. stellar and terrestrial
2. pure and hybrid
3. analytic and geometric
4. aircraft and surface ship

4-53. In the analytic inertial navigation system, the platform position is referenced to
1. true north
2. gravity
3. a point in space
4. magnetic north

4-54. Refer to figure 6-28. An output from the north accelerometer is integrated with acceleration correction terms with respect to time to derive the north velocity component of the vehicle's track. What is further done to the velocity term to provide a position readout in the form of latitude? The velocity term is
1. fed straight to the integrator
2. mixed with the gyro signal and integrated
3. converted to an angular velocity and integrated
4. mixed with the east accelerometer signal and integrated

4-55. Refer to figure 6-29. When the platform is aligned at the equator and then moved north, what is the relationship of the gyros and accelerometers to the earth's surface?
1. Both the gyros and accelerometers maintain their position in inertial space
2. The accelerometers remain normal to the gravitational field; the gyros maintain their position in inertial space
3. The gyros remain in a plane tangent to the earth's surface; the accelerometers maintain their position in inertial space
4. Both the gyros and accelerometers remain in a plane tangent to the earth's surface

4-56. After the position converter in the strap-down system converts inertial acceleration and altitude vectors into coordinates, these coordinates are used to
1. completely align the overall system
2. determine altitude of the vehicle
3. provide readouts of latitude and longitude
4. determine accelerations along the inertial axis

4-57. The combination of an inertial navigation system and some other type of navigation system is called a/an
1. hybrid inertial navigation system
2. analytic inertial navigation system
3. geometric inertial navigation system
4. strap-down inertial navigation system

4-58. The type of updating process that compares the inertial ground velocities with the ground velocities of some other system is called
1. reset
2. summation
3. mechanized
4. damping

4-59. Loran is used to damp the inertial velocities and update the position of the vehicle in which of the following hybrid inertial navigation systems?
1. Radio inertial only
2. Doppler inertial
3. Stellar inertial only
4. Radio inertial and stellar inertial

4-60. In the Doppler inertial hybrid system, the use of accurate ground speed information to damp the inertially derived ground velocities is a great advantage because errors are NOT cumulative, and the accuracy obtained may be in the order of
1. 100 feet per second
2. 2 feet per second
3. 50 feet per second
4. 20 feet per second

4-61. All of the following information is necessary in order to have an accurate stellar inertial navigation system EXCEPT
1. a reliable time standard
2. an up-to-date star catalogue
3. a well-aligned astrotracker
4. a Loran input

4-62. The basic inertial navigation system from which all navigation computations are derived is a combination of
1. torque motors and gyros mounted on a stable element
2. accelerometers and gyros mounted on a stable element
3. integrators and gyros mounted on a stable element
4. accelerometers and integrators mounted on a stable element

---

Learning Objective: Recognize fundamentals of operation of the AN/ASW-16 automatic flight control system and its components.

4-63. If the attitude hold mode is selected when the aircraft is in a 4-degree right bank, what system response will result?
1. The attitude hold mode will disengage
2. The system will hold the 4-degree right bank and operate in the roll attitude hold mode
3. The system will level the aircraft in the roll axis and operate in the heading hold mode
4. The system will cause the aircraft to roll to a bank attitude of 5 degrees and will then operate in the roll attitude hold mode

---

In answering items 4-64 through 4-68, select from column B the system operation applicable to each mode listed in column A.

A. Modes	B. System Operations
4-64. Stability augmentation	1. A programmed ballistic computer automatically controls the aircraft maneuver(s)
4-65. Altitude hold	2. The aircraft maintains a referenced speed by making changes in pitch attitude
4-66. Command	3. Pitch attitude is varied to maintain the aircraft at the reference altitude
4-67. Mach hold	4. Pitch, roll, and yaw deviations of the aircraft are dampened and turns are coordinated
4-68. Return-to-level	

In items 4-69 through 4-71 which concern the stabilizer actuator, select from column B the system response relating to each of the modes listed in column A.

A. Modes	B. System Responses
4-69. Manual	1. The actuator cylinders are moved either by the AFCS signal alone or by the AFCS signal and the control stick movement
4-70. Series	2. The AFCS input signal causes the actuator cylinders to move and the mechanical input is locked out
4-71. Parallel	3. The actuator cylinders respond to movement of the control stick only
	4. Hydraulic pressure is removed and movement of the control stick mechanically operates the stabilizer

---

4-72. Which of the following statements is correct concerning the two operating speeds of the stabilizer trim actuator?
1. Slow speed is used in manual operation to obtain fine trim adjustments
2. Fast speed is required for automatic trimming to obtain stable system operation
3. Fast speed operation can be selected for use with either manual or AFCS control
4. Slow speed is required for automatic trimming to obtain stable system operation

4-73. Refer to figure 7-6. What are the inputs from the flaperon autopilot actuator to the flaperon actuators?
1. A combination of AFCS input and the mechanical linkage in the series mode, and a direct mechanical linkage from the control stick in the manual mode
2. A direct mechanical linkage from the control stick in the manual mode, and an input from the AFCS only in the series mode
3. A combination of AFCS input and the mechanical linkage in the series mode, and an input from the AFCS only in the parallel mode
4. An AFCS input only in the series mode, and a combination of AFCS input and the mechanical linkage of the control stick in the parallel mode

Assignment 5

Automatic Flight Control System; Power Plant and Aircraft Environmental Systems

Text: Pages 161 - 214

Learning Objective (continued): Recognize fundamentals of operation of the AN/ASW-16 automatic flight control system and its components.

5-1. Refer to figure 7-7 and assume the AFCS is operating in manual mode. When rudder position corresponds to rudder pedal position, the flow of fluid is stopped as a result of action of the
1. servo ram
2. transducer
3. differentiating lever
4. electrohydraulic servo valve

5-2. The maximum combined AFCS and manual displacement of the rudder from neutral for clean flight configuration CANNOT be greater than
1. 1°
2. 2°
3. 4°
4. 8°

Refer to figure 7-8 in answering items 5-3 through 5-6. Select from column B the type of each of the system sensors listed in column A.

A. Sensors	B. Types
5-3. Lateral and normal accelerometers	1. AFCS
	2. Auxiliary
5-4. Yaw, roll, and pitch rate gyros	
5-5. Inertial navigation system and air data computer	
5-6. Ballistic computer set and ground controlled bombing system	

5-7. A rate gyro's output is the result of
1. gyro case nutation
2. third-axis motion
3. torsion bar snapback
4. spin axis precession

5-8. A rate gyro is mounted in a nonlocking gimbal whose rotational freedom is restrained by a
1. torsion restoring band
2. torsion restoring spring
3. viscous damper
4. hair spring

5-9. Which of the following statements is correct concerning the output voltage from a rate gyro?
1. Both polarity and amplitude are determined by the direction of precession
2. Both polarity and/amplitude are determined by the amount of precession
3. Polarity is determined by the direction of precession and amplitude is determined by the amount of precession
4. Amplitude is determined by the direction of precession and polarity is determined by the amount of precession

5-10. Which of the following sensors will detect a loss of altitude even though the aircraft is in a nose up attitude?
1. The vertical gyro
2. The pitch rate gyro
3. The lateral accelerometer
4. The normal accelerometer

5-11. Which of the following statements is correct concerning the output voltage from the accelerometers?

1. The amplitude of the voltage is constant but its phase varies with the speed of acceleration
2. The direction of acceleration determines the phase relationship between the output voltage and the excitation voltage
3. The amount of acceleration determines the phase relationship between the output voltage and the excitation voltage
4. The phase of the voltage is constant but its amplitude varies with the direction of acceleration

Refer to table 7-2 in answering items 5-12 and 5-13.

5-12. When the AFCS is operating in the command mode and the ballistic computer operation is in effect, what will be the result of applying a force to the control stick in a pitchdown direction?

1. S2 will disengage AFCS control of the pitch axis, giving the pilot manual stick control. After the force applied to the stick is released, the equipment will return to command mode ballistic computer operation
2. S1 will disengage AFCS control of the pitch axis, giving the pilot manual stick control. After the force applied to the stick is released, the equipment will return to command mode ballistic computer operation
3. S2 will engage, allowing the system to have both manual and AFCS input control during the time the force is applied to the control stick
4. S1 will engage, allowing the system to have both manual and AFCS input control during the time the force is applied to the control stick

5-13. When the AFCS is operating in the TPQ-10 mode, what will be the result of applying a force in excess of 1.1 pounds to the control stick in the roll left direction?

1. S3 will cause the AFCS roll input to disengage and allow the pilot to insert manual control; the TPQ-10 mode will automatically reengage when the force is released
2. S4 will cause the AFCS roll input to disengage and allow the pilot to insert manual control; the TPQ-10 mode will automatically reengage when the force is released
3. S3 will cause the AFCS roll input to disengage and allow the pilot to insert manual control; the TPQ-10 mode may be reengaged manually after the force is released
4. S4 will cause the AFCS roll input to disengage and allow the pilot to insert manual control; the TPQ-10 mode may be reengaged manually after the force is released

---

In answering items 5-14 and 5-15, refer to figure 7-12. Select from column B the switch or switches that will react as described in column A when power is applied, the switch is depressed to the engaged position, and the depressing force is then released.

A. Reactions	B. Switches
5-14. Will remain in the engaged position until the solenoid is manually overridden or the solenoid voltage is removed	1. S22 and S23 2. S24 3. S21, S25, and S26
5-15. Will remain in the engaged position until the solenoid voltage is removed	

Learning Objective: Identify operational functions of the AFCS air navigation computer and its various modules.

5-16. The air navigation computer receives all AFCS signals and routes them to operate their respective actuators. Which of the following happens to the signals while they are passing through the computer?

1. They are coupled and shaped only
2. They are coupled and amplified only
3. They are shaped and amplified only
4. They are shaped, coupled, and amplified

- Refer to figure 7-14 in answering items 5-17 and 5-18.

5-17. What does the output signal from the altitude, mach, and pitch command channel represent?

1. A bank error
2. A roll error
3. A turn rate error
4. A pitch attitude error

5-18. The limited output signal from the lateral path channel serves to establish

1. a bank error signal from the roll computer
2. the maximum bank angle which an error signal can initiate
3. one of the maximum positions of the mach potentiometer arm away from its centered position
4. a rudder error signal resulting from the combination of roll command and heading computer output signals

5-19. When the AUTO STAB-AUG switch is in AUTO position and the aircraft is in a roll attitude of less than 5 degrees, what automatic flight control configurations are automatically selected?

1. Attitude hold and wing leveling only
2. Heading hold and wing leveling only
3. Attitude hold and heading hold only
4. Attitude hold, heading hold, and wing leveling

- Refer to figure 7-15 in your textbook in answering items 5-20 through 5-22.

5-20. When the AFCS is operated in the heading hold configuration, what relay conditions exist and what circuit operations occur in the roll computer module?

1. K3001 is energized, which couples the heading computer control transformer error signal to the motor; K3004 is energized, which couples a signal from the sine resolver to Z600, canceling the heading error signal after the desired bank is established
2. K3001 is deenergized, which couples the heading computer control transformer error signal to the motor; K3004 is energized, which couples a signal from the sine resolver to Z600, canceling the heading error signal after the desired bank is established
3. K3001 is deenergized, which stops the motor; an error signal is fed directly to the AFCS servosystem through the deenergized contacts of K3004 and K3003
4. K3001 is deenergized, which couples an error signal to the motor; this error signal, which cancels the input error, is coupled to Z600 through the energized contacts of K3003 and the deenergized contacts of K3004

5-21. If AFCS is engaged in attitude hold mode and the aircraft is in a bank greater than 60 degrees, K3003 will energize. A signal will be coupled through the limiting network, resulting in what aircraft response?

1. Roll back to a bank angle of 60 degrees
2. Roll back to a bank angle of 25 degrees
3. Hold at the engaged bank angle
4. Return to a wings level attitude

5-22. What components provide for the cancellation of the resolver output when the aircraft is at zero bank angle?

1. C3012 and T3001
2. R3018 and R3015
3. R3018 and R3021
4. R3018 and C3012

● Refer to figure 7-16 in answering items 5-23 and 5-24.

5-23. Which of the following correctly describes the input signal to Z100-2?
1. A 400-Hz signal whose phase and amplitude are determined by the direction and amount of rate gyro precession
2. A dc signal whose polarity and amplitude are determined by the direction and amount of rate gyro precession
3. A 400-Hz signal whose amplitude is constant and whose phase is determined by the amount of rate gyro precession
4. A dc signal whose amplitude is constant and whose polarity is determined by the direction of rate gyro precession

5-24. The rate gyro signal is coupled into the roll servoamplifier as an ac signal, demodulated into a dc signal, modulated back into an ac signal, mixed with the roll command and feedback signals, and coupled through the
1. rate gyro wipe-out channel to actuate the roll computer module
2. rate gyro wipe-out channel to actuate the rate gyro
3. actuator drive amplifier section to actuate the flaperon actuator
4. actuator drive amplifier section to the summing junction

● Refer to figure 7-17 in answering items 5-25 and 5-26.

5-25. When the AFCS is operating in pitch attitude synchronization mode, what is the output of the pitch computer module control transformer, and why?
1. Zero because the motor amplifier is disabled
2. A direct representation of the sensed deviation pitch of the aircraft from a reference attitude because both K4001 and K4006 are energized
3. Zero because any detected deviation in pitch is coupled to the motor and nulls the control transformer
4. Zero because both K4001 and K4006 are energized and all inputs to the control transformer are removed

5-26. Which of the following statements is correct concerning the pitch computer module when the AFCS is operated in altitude or mach hold mode?
1. K4001 is energized and K4006 is deenergized; any altitude or mach deviation signal causes the motor to turn the sine resolver and couple a signal to the system which changes the aircraft pitch to reduce the error signal to zero
2. K4001 is deenergized and K4006 is energized; any altitude or mach deviation signal causes the motor to turn the control transformer and couple a signal to the system which changes the aircraft pitch to reduce the error signal to zero
3. K4001 and K4006 are both energized; any altitude or mach deviation signal causes the motor to turn the sine resolver whose error signal is coupled to the system to change the aircraft pitch to reduce the error signal to zero
4. K4001 and K4006 are both deenergized; any pitch or roll deviation signal causes the motor to turn the sine resolver whose error signal is coupled to the system to change the aircraft pitch to reduce the error signal to zero

---

Learning Objective: Recognize signal flow theory relevant to the rudder, flaperon, and stabilizer axes in the various modes of AFCS operation.

● Refer to figure 7-19 in answering items 5-27 through 5-29.

5-27. The control functions provided by the rudder axis include
1. yaw dampening and heading hold only
2. yaw dampening and coordination of turn maneuvers only
3. heading hold and coordination of turn maneuvers only
4. yaw dampening, heading hold, and coordination of turn maneuvers

5-28. As the rudder actuator is being positioned proportional to Z100-1's input signal, the input error signal is canceled by a signal from the
1. yaw rate gyro
2. position sensor
3. air data computer
4. balance adjust

5-29. AFCS and rudder pedal signals are combined in what manner and at what junction?
1. Mechanically at summing junction (3)
2. Electrically at summing junction (3)
3. Mechanically at summing junction (2)
4. Electrically at summing junction (2)

5-30. When the AFCS is operating in the stability augmentation mode, the yaw damper and turn coordination signals function to
1. maintain a referenced attitude
2. assist the pilot in moving the rudder pedals
3. dampen aircraft yaw movement and reduce aircraft side acceleration
4. increase yaw movement and aircraft side acceleration

5-31. Selection of the mode(s) of operation of the flaperon axis CANNOT be accomplished by
1. engaging a switch on the TPQ-10 ground controlled bombing system panel
2. applying force to the aircraft control stick
3. engaging function switches on the controller
4. engaging a switch on the aircraft control stick

● Reference to figure 7-20 will be helpful in answering items 5-32 through 5-36.

5-32. The signal generated by movement of the control stick and the AFCS control signal are combined by
1. electrically summing the stick movement signal with the AFCS electrical signal at summing junction (8)
2. electrically summing a signal from the position sensor and the AFCS input at summing junction (7)
3. electrically summing a signal from the position sensor and the AFCS signal at the autopilot actuator
4. mechanically summing the stick movement signal with the AFCS mechanical signal at summing junction (8)

5-33. When the AFCS is operating in the stability augmentation mode, automatic synchronization of the flaperon axis with the roll and heading of the aircraft is accomplished by what components?
1. The command coupler module and the heading computer module, respectively
2. The roll servo amplifier and the command coupler module, respectively
3. The roll servo amplifier and the heading computer module, respectively
4. The roll computer module and the heading computer module, respectively

5-34. Roll attitude synchronization and heading synchronization serve to keep the output shafts of the roll servo assembly and the heading servo assembly aligned respectively with the roll attitude and the heading of the aircraft.

5-35. Which of the following actions will result if the roll attitude mode is engaged when the aircraft is in a roll attitude in excess of 60 degrees?
1. The system will return the aircraft to a wings level attitude
2. The system will hold the aircraft at the attitude at which engagement occurs
3. The roll attitude will be reduced to and be maintained at 60 degrees
4. The attitude hold engage switch will disengage

5-36. Emitter follower (Z-5050) in the command coupler module serves to
1. match the impedances of the Mach pot and the lateral path channel
2. match the impedances of the two input circuits to summing junction (4)
3. match the impedance of the Mach pot and summing junction (4)
4. provide a three-to-one decrease in heading gain from the aircraft's maximum airspeed to the landing condition

5-37. In order to engage the TPQ-10 mode, what AFCS and aircraft attitude conditions must be met? The AFCS must be in the
1. stability augmentation mode, and the aircraft must be wings level
2. attitude (heading) hold mode or command mode, and the aircraft must be in a bank angle greater than 5 degrees
3. attitude (heading) hold mode or command mode, and the aircraft must be in a bank angle of less than 5 degrees
4. command mode, and the aircraft bank angle must be greater than 5 degrees

5-38. What are the lateral command mode control phases provided in the AFCS?
1. Roll command phase and ALS data link command phase only
2. Return to level phase and ALS data link command phase only
3. Roll command phase and return to level phase only
4. Roll command phase, return to level phase, and ALS data link command phase

5-39. When the AFCS is operated in the roll command phase, the difference between the desired heading and actual aircraft heading is computed by the
1. ballistic computer
2. inertial navigation system
3. attitude/heading reference system
4. heading computer control transformer

5-40. When a LAB maneuver is involved in the roll command phase, all maneuver sequences are set up and sequentially controlled by the
1. ballistic computer
2. data link
3. attitude/heading reference system
4. inertial navigation system

5-41. In the return to level phase, what determines the motor roll-back rate?
1. The phase and amplitude of the roll computer control transformer output signal
2. The algebraic sum of the roll computer tachometer and the control transformer output signals
3. The algebraic sum of the roll computer tachometer and the sine resolver signals
4. The algebraic sum of the roll computer control transformer and the sine resolver output signals

5-42. Which of the following statements is correct concerning the use of manual control inputs during operation in the ALS data link phase or the roll command phase? At the conclusion of manual inputs while in
1. either the ALS or roll command phase of operation the CMD switch must be reengaged
2. the roll command phase the equipment will return to the roll command phase without reengaging the CMD switch, but if in the ALS phase the CMD switch must be reengaged
3. the roll command phase the CMD switch must be reengaged, but if in the ALS phase the equipment will return to the ALS phase automatically
4. either the ALS or the roll command phase of operation the equipment will return to its original phase of operation automatically

5-43. Which of the following statements is correct concerning longitudinal and lateral ALS information supplied to the AFCS?
1. Both longitudinal and lateral information control the pitch axis
2. Both longitudinal and lateral information control the roll axis
3. Lateral information controls the roll axis, and longitudinal information controls the pitch axis
4. Lateral information controls the pitch axis, and longitudinal information controls the roll axis

5-44. In order to establish the return to level mode, the equipment must be operating in any of the following modes EXCEPT
1. heading hold
2. Mach hold
3. stability augmentation
4. TPQ-10

Items 5-45 through 5-56 relate to the diagram shown in figure 7-21.

5-45. In the series mode, what are the limits of the stabilizer axis control surface authority for mechanical inputs with both flaps and gear up?
1. 4 degrees down and 8.75 degrees up
2. 4 degrees up and 8.75 degrees down
3. 2 degrees down and 10.75 degrees up
4. 2 degrees up and 10.75 degrees down

5-46. In which mode(s) of operation, if any, will stabilizer axis AFCS inputs result in control column movement?
1. Parallel mode only
2. Series mode only
3. Both series and parallel modes
4. None

5-47. What is the purpose of pitch attitude synchronization in the stability augmentation mode?
1. To dampen pitch axis oscillations
2. To keep the computer tachometer rotating at a speed proportional to the pitch angle
3. To obtain an output voltage that will position the stabilizer to the commanded position
4. To keep the pitch computer output shaft aligned to the stabilizer position

5-48. What will be the result if the pitch synchronization is not performing its function within the limits given?
1. K1009 will energize and disengage the AFCS
2. K1009 will energize and the attitude hold mode cannot be engaged
3. Either K4008 or K4009 will be energized and the attitude hold mode cannot be engaged
4. Either K4008 or K4009 will be deenergized and the attitude hold mode cannot be engaged

5-49. What will be the result if the pitch attitude hold configuration is selected but relay K4001 does not energize?
1. The equipment will operate in a normal pitch attitude hold configuration
2. The equipment will remain in the pitch attitude synchronization configuration
3. The pitch computer will remain clamped and prevent the computer motor from rotating
4. The equipment will engage in the pitch attitude synchronization configuration

5-50. Which of the following statements is correct concerning the situation in which the aircraft's attitude is beyond the pitch limits when the pitch attitude hold mode is engaged? If the attitude is in excess of the limits in
1. pitchdown direction, K4004 will energize and the pitch attitude will be reduced to -25 degrees
2. pitchdown direction, K4003 will energize and the pitch attitude will be reduced to -25 degrees
3. pitchup direction, K4004 will energize and the pitch attitude will be reduced to +25 degrees
4. pitchup direction, K4003 will energize and the pitch attitude will be ~~reduced~~ to +25 degrees

---

In answering items 5-51 through 5-53, select from column B the function of each of the relays listed in column A and shown in figure 7-21.

A. Relays

5-51. K1017
5-52. K1040
5-53. K4002

B. Functions

1. Connects the pitch computer balance adjust potentiometer to the input of summing junction (12)
2. Connects the output of the attitude sensor to summing junctions (9) and (12)
3. Removes the control transformer input from summing junction (12) and switches in full tachometer input to summing junction (12)
4. Connects the vertical damping channel output into summing junction (12)

5-54. If the altitude displacement error were the only control, engagement of the altitude hold mode at a time when the aircraft is in an other-than-level attitude would result in the aircraft
1. maintaining that attitude
2. reducing in pitch attitude without leveling off
3. leveling off and maintaining the referenced altitude
4. holding at an altitude different from the desired altitude

5-55. The output of the roll computer resolver's cosine windings during bank attitudes serves to
1. prevent erroneous pitch error signals during turn maneuvers
2. turn the resolver in the proper direction
3. compensate for improper phasing of sine signals in the computer
4. cancel output error signals from the resolver

5-56. Speed of the aircraft is controlled during the Mach hold function by controlling
1. roll attitude
2. throttle movement only
3. pitch attitude only
4. pitch attitude and throttle movement

5-57. What is the purpose of the AFCS mode interlock system?
1. To prevent selection of incompatible functions
2. To ensure operator safety during system testing
3. To eliminate unnecessary use of relays
4. To provide a positive means of interfacing components

5-58. Refer to table 7-3. Which of the following groupings contains only modes of operation in which the flaperon axis is controlled?
1. Roll attitude hold, heading, and G-command
2. Mach hold, roll command, and pitch attitude hold
3. Stability augmentation, return to level, and automatic pitch trim
4. Heading synchronization, roll attitude hold; heading hold, roll command, and ground controlled bombing (TPQ-10)

Learning Objective: Recognize functions and operating principles of components and circuits in the variable exhaust nozzle control system and the automatic temperature control system, including system action relating to lever positioning.

Items 5-59 through 5-64 refer to the variable nozzle system illustrated in figure 8-1 in your textbook.

5-59. What determines the schedule by which the nozzle modulates from the point at which the torque motor in the nozzle area control overrides the mechanical schedule until military temperature is attained?
1. Power lever position and nozzle position
2. Nozzle position and engine speed
3. Exhaust gas temperature (EGT) and power lever position
4. Engine speed and exhaust gas temperature (EGT)

5-60. From where in the engine is exhaust gas temperature (EGT) taken and to where is the information transmitted?
1. Downstream of the third-stage turbine wheel; to the temperature amplifier and to the exhaust gas temperature indicator
2. Downstream of the third-stage turbine wheel; to the temperature amplifier
3. Upstream of the third-stage turbine wheel; to the exhaust gas temperature indicator
4. Downstream of the third-stage turbine wheel; to the after section of the tail pipe

5-61. Assuming that the engine power setting is NOT changed, which of the following statements concerning the variable nozzle is correct?
1. When the nozzle is fully open, all deflection is accomplished by the primary flaps
2. The smaller the nozzle area, the lower the EGT
3. The larger the nozzle area, the higher the EGT
4. The smaller the nozzle area, the higher the EGT

5-62. The purpose of the control alternator is to provide
1. operating power to the nozzle pump
2. ac operating power to the temperature amplifier
3. ac operating power to the nozzle actuators
4. standby power for the thermocouples

5-63. The temperature amplifier is cooled by the flow of
1. fuel
2. forced air
3. free air
4. refrigerated cabin air

5-64. Refer to figure 8-2. The nozzle area control motor is powered by a voltage which represents the
1. difference between the reference voltage and the thermocouple signal
2. sum of the reference voltage and the thermocouple signal
3. primary voltage of the power transformer
4. secondary voltage of the power transformer

5-65. The power lever has preset detents for each power setting to prevent changes of power.

5-66. Which of the following statements is NOT correct concerning condition levers in an E-2 aircraft?
1. As each lever is placed into each position, circuitry is actuated to perform the cycle selected
2. When the AIR START position is selected, the lever must be held until the start cycle is completed
3. It is mechanically impossible to place both engines in FEATH at the same time
4. The levers are located on the opposite side of the cockpit pedestal from the power levers to ensure selection of appropriate levers

5-67. What rpm speed and what power lever setting will allow switching of the temperature datum control from temperature limiting to temperature control?
1. Rpm below 94%; power lever below 66° on the coordinator
2. Rpm above 94%; power lever above 66° on the coordinator
3. Rpm below 94%; power lever above 66° on the coordinator
4. Rpm above 94%; power lever below 66° on the coordinator

5-68. The discriminating device will complete the feather cycle when the condition lever is placed in FEATH and the power lever is placed in
1. any position below the FLT IDLE position only
2. any position above the FLT IDLE position only
3. the taxi range only
4. any position

5-69. When reference temperature and turbine inlet temperature signals sent to the temperature datum control indicate a difference greater than 1.9°C, a control signal is sent to the temperature datum valve. The control signal causes the valve to
1. regulate the fuel flow to the engine being controlled
2. control a fuel-flow stabilizing pump on the engine being controlled
3. adjust the power lever assembly regulating fuel flow to the engine being controlled
4. readjust the engine coordinators and the trimming circuits on the engine being controlled

5-70. Mounted in each engine is a turbine inlet case containing two thermocouples connected in parallel. If one of the thermocouples were to malfunction, what would be the effect, if any, on the other thermocouple circuit?
1. It would not be affected
2. It would become inoperative
3. It would produce a higher signal
4. It would produce a lower signal

5-71. If the electronic fuel trimming circuit malfunctions, the temperature is controlled by
1. placing the TEMP/DATUM switch in the NULL position and controlling the fuel flow with the movement of the power lever
2. placing the TEMP/DATUM switch in the NULL position so that fuel flow control will again be automatic
3. leaving the TEMP/DATUM switch in the AUTO position and controlling the fuel flow with the movement of the power lever
4. moving the TEMP/DATUM switch to the ALT position and controlling the fuel flow from the backup temp datum system

Assignment 6

Power Plant and Aircraft Environmental Systems

Text: Pages 215 - 242

Learning Objective: Relative to S-3 type aircraft, identify functions, names, and operating principles of performance indicators and warning systems and associated components and circuits.

Items [illegible] through 6-9 refer to accessories and performance indicators used in S-3 type aircraft.

Refer to figure 8-4 in answering items 6-1 through 6-3. Select from column B the engine performance indicators containing each of the caution lights listed in column A.

A. Caution Lights	B. Indicators
6-1. Gas generator overspeed	1. N_F
6-2. Overtemperature	2. N_G
6-3. Fan overspeed	3. FF
	4. ITT

6-4. The fuel flow consumption rate of an engine is sensed in a fuel flow transmitter by pulse generator input devices called

1. fuel contactors
2. pickup exciters
3. paddle wheels
4. exciter generators

6-5. If the quantity of fuel flowing through a fuel flow transmitter increases, the amount of time lag between pulses in the transmitter's pulse train output is caused to

1. decrease proportionally
2. decrease exponentially
3. increase proportionally
4. increase exponentially

6-6. The gas generator speed indicator output readings are derived from the ac sine-wave output signal of a

1. tachometer generator
2. servo amplifier
3. two-stage pressure turbine
4. 28-hertz permanent-magnet transmitter

6-7. Ferrous nuts, mounted on the shaft of the engine's fan, serve as a means of

1. balancing the shaft
2. generating pulses
3. reducing eddy currents
4. amplifying rpm signals

6-8. When fan speed is too high, a warning light illuminates due to action of a/an

1. untuned logic circuit and a reference generator
2. untuned logic circuit and a tuned oscillator
3. tuned logic circuit and a reference generator
4. tuned logic circuit and a tuned oscillator

6-9. Engine temperature sensing is accomplished by an assembly of

1. 3 thermocouples connected in series
2. 5 thermocouples connected in parallel
3. 3 thermocouples connected in series-parallel
4. 5 thermocouples connected in series-parallel

6-10. Refer to figure 8-6. Which of the following statements is correct concerning the fire detector system shown in the figure?

1. Since the sensing elements react primarily to ambient temperature changes, system voltage regulation is not critical
2. Actuation of the test switch deenergizes the test relay and allows a simulated high-resistance sensing element condition to exist
3. When exposed to high temperatures, the sensing element increases in resistance
4. When exposed to high temperature, the sensing element decreases in resistance

---

Learning Objective: Recognize operating principles of engine starting control systems and associated fuel system components, and indicate functions, locations, and characteristics of the components.

6-11. An air turbine starter is operated by compressed air from a GTC or an APU, or by
1. bleed air from an operating engine
2. bleed air from the starter itself
3. air vented directly to the starter from the outside
4. compressed air from an emergency air tank

6-12. The engine start switch is held on by a holding relay until engine rpm reaches what percent?
1. 16%
2. 65%
3. 77%
4. 94%

6-13. The ignition exciter provides which of the following voltages?
1. A stepped-up voltage for firing ignition plugs
2. A 28-volt excitation voltage for closing the ignition relay
3. A pulsating voltage for activating the speed-sensitive control
4. A sine-wave voltage for application to the ignition relay solenoid

6-14. The function of the centrifugal boost pump in the engine fuel pump assembly is to adjust the pressure on the fuel to a predetermined
1. minimum value
2. maximum value
3. average value
4. value sufficient to ensure a 7.5-psi differential between input and output

6-15. When a pressure differential greater than 7.5 psi exists between the inlet of the low pressure filters and the input of the the centrifugal boost pump, it will cause the fuel to
1. bypass the low-pressure filters only
2. close the bypass valves in the low-pressure filters
3. bypass both the low- and high-pressure filters
4. flow through both the low- and high-pressure filters

6-16. When the filters between fuel pump and fuel control become clogged, which of the following should happen?
1. The bypass valves across the filters should open
2. The bypass valves across the filters should close
3. The filter elements should expand under pressure
4. Centrifugal pressure on the line should automatically increase, overcoming the blockage

6-17. What behavior of the paralleling lamp indicates that the secondary element of a fuel pump has failed?
1. Lamp illuminates continuously
2. Lamp never illuminates
3. Lamp illuminates above 65% rpm only
4. Lamp illuminates between 16% and 65% rpm only

6-18. In conjunction with the temperature datum valve, the fuel control functions to provide a starting fuel flow schedule and to
1. reduce nominal fuel requirements
2. prevent overtemperature and compressor surge
3. operate hydraulic-actuated fuel cutoff valves
4. close the fuel cutoff valve during compressor surges

6-19. After an engine is started, the associated fuel cutoff valve will remain closed until engine speed attains what minumum rpm?
1. 7.5% rpm
2. 16.0% rpm
3. 20.0% rpm
4. 65.0% rpm

6-20. The fuel control relay is energized in which of the following circumstances?
1. When the fuel and ignition switch is in the ON position
2. When the propellor is feathered
3. When the fuel control shutoff valve is malfunctioning
4. When the fuel control shutoff valves is in a FAILSAFE condition

6-21. Where is the temperature datum valve located?
1. Between the fuel control and fuel nozzles
2. Between the fuel nozzles and fuel output lines
3. Upstream of the fuel control
4. Upstream of the fuel control cutoff valve

6-22. Which of the following statements is correct of the manifold drain valve?
1. It is spring-loaded and solenoid operated
2. It is located at the top of the fuel manifold
3. It is the mechanism for draining fuel when fuel pressure becomes greater than 20 psi
4. It is the drop path around the combustion liners

6-23. What is the function of the compressor bleed air valves?
1. To reduce the compressor load on the starter
2. To minimize the starter load on the compressor
3. To bleed air from the compressor's fifth stage into its tenth stage
4. To sequentially close the eight parts on the compressor housing

---

Learning Objective: Recognize sequential operations in a normal engine start cycle, including effects of the operations on circuit components, and identify means of controlling propellor pitch.

6-24. If the engine start selector switch is placed in engine number 1 position and the fuel and ignition switch for engine 1 is moved to ON, what will happen to (a) the fuel control relay and (b) the temperature datum relay?
1. (a) energize (b) deenergize
2. (a) deenergize (b) energize
3. (a) energize (b) energize
4. (a) deenergize (b) deenergize

6-25. When the engine start switch is depressed, current flows through which of the following components?
1. The engine start selector switch only
2. The speed-sensitive control only
3. The speed-sensitive control, and the engine start selector switch only
4. The starter control valve, the speed-sensitive control, and the start selector switch

6-26. The starter valve lights illuminate when compressed air closes the contacts of the
1. primer switch
2. primer valve solenoid
3. air valve position switch
4. speed-sensitive control

6-27. Which of the following will occur when approximately 65% rpm is reached?
1. Switches in the speed-sensitive control will close
2. The ignition relay will energize
3. The fuel pump will operate in series
4. A series light will illuminate

6-28. With the propeller governor at one setting, the governor maintains a constant engine rpm by decreasing propeller pitch when engine rpm starts to decrease, and increasing propeller pitch when engine rpm starts to increase.

6-29. The pitch of a propeller blade is varied by porting engine lubricating oil directly to what part(s) of the propeller piston?
1. Inboard side only
2. Outboard side only
3. Inboard and outboard sides
4. Geared cam

Learning Objective: Recognize facts regarding propeller synchrophasing and the components and circuitry involved, including use of a troubleshooting chart.

6-30. The synchrophaser will function in which governing mode(s)?
1. Mechanical only
2. Normal and synchrophasing
3. Synchrophasing only
4. Mechanical and normal

6-31. Propeller synchrophasing supplements the mechanical governor by maintaining the same rpm on all propellers and by maintaining a/an
1. inverse phase relationship between each of the slave propellers and the master propeller
2. preset phase relationship between the master propeller and each of the slave propellers
3. constant pump pressure on each of the slave propellers
4. preset pump pressure on each of the slave propellers

In answering items 6-32 through 6-34, select from column B the function of each of the synchrophaser system components listed in column A.

A. Components

6-32. Pulse Generator

6-33. Phase and Trim Control

6-34. Speed Bias Servo Assembly

B. Functions

1. Provides for the input of a preselected phase relationship between the master and slave propellers
2. Mechanically controls the speeder spring to control the speed of the propellers by using the 400-Hz input from the electronic unit to determine the direction and amount of control
3. Produces one pulse output signal for each propeller revolution by using a magnet attached to a propeller blade and a stationary coil
4. Produces a 400-Hz speed bias servocontrol voltage that is the result of comparing the slave and master input pulse signals

---

● Refer to figure 8-8 in answering items 6-35 and 6-36.

6-35. The feedback potentiometer that is connected to the No. 2 winding of the magnetic modulators is powered from what source?

1. Anticipation potentiometer
2. Clutch and brake solenoid
3. Synchrophaser
4. Master relay

6-36. Note the amplifier symbols in the center of the figure. What form of input signal is applied to the amplifiers?

1. AC, controlled in phase only
2. AC, controlled in amplitude only
3. AC, controlled in phase and amplitude
4. DC, controlled in polarity and amplitude

6-37. The modulator unit in the synchrophaser provides which of the following servomotor control voltages?

1. An ac voltage 90° or 270° out of phase with the excitation voltage
2. An ac voltage in phase or 180° out of phase with the voltage applied to the reference winding
3. An ac voltage in phase or 180° out of phase with the excitation voltage
4. A negative or positive dc signal voltage

6-38. Engine response to transient rpm changes is improved in the normal governing mode, and in the synchrophasing mode engine speeds are synchronized, propeller phase angles are regulated, and the limiting features of the normal governing mode are maintained.

● Refer to figure 8-9 in answering items 6-39 through 6-46.

6-39. As the power lever is moved to decrease power, capacitor C303 charges to a more positive value. This increased voltage is applied to the speed derivative circuit and results in

1. the leading voltage surge that appears on the servomotor control winding of the mechanical governor
2. a change in the speed or phase of the master engine with respect to the slave engine
3. resetting of the mechanical governor towards a decrease in propeller pitch
4. resetting of the mechanical governor towards an increase in propeller pitch

6-40. CR620 functions to

1. prevent circuit overcompensation in response to rapid throttle-lever movement
2. provide reference voltage to the servocontrol motor
3. provide reference voltage to the tachometer generator
4. prevent disruption of the dc bias voltage on the magnetic modulator

6-41. The purpose of the speed derivative circuit is to sense changes in engine rpm and to generate output signals that

1. change the propeller pitch to align the slave propellers to the master propeller
2. dampen engine rpm changes
3. change the propeller pitch to correspond to engine rpm
4. dampen propeller pitch transients

6-42. The magnitudes of the signal input to the No. 1 winding of the magnetic modulator vary as a result of
1. synchrophaser action
2. reflected impedance from the No. 2 winding and the dummy load
3. voltage changes in the input to the magnetic modulator
4. frequency changes in the engine's tachometer generator

6-43. What is the effect of a signal on the No. 1 winding of the magnetic modulator?
1. The frequency of the pulse generator is changed
2. Propeller pitch is changed
3. The synchrophaser is rendered less effective
4. Aircraft tachometer generator spring tension is decreased

6-44. The signal to drive the servomotor in a direction to dampen drifts in engine rpm is directly related to the
1. potential on C621
2. voltage on the collector of Q603
3. changing output frequency of the tachometer generator
4. amplitude of output signal from the anticipation pot

6-45. In the normal governing mode, the mechanical governor is aided in its response to changes in power lever settings and engine rpm by which sensitive circuit(s)?
1. Speed derivative circuit only
2. Power lever anticipation circuit only
3. Speed derivative and power lever anticipation circuits
4. Aircraft tachometer circuit

6-46. When the synchrophasing mode of operation is used, all engines except the master engine operate with synchrophasing, and the master engine operates with
1. normal governing only
2. mechanical governing only
3. normal and mechanical governing

6-47. Which of the following is the correct sequence of events which results in the propellers of a synchrophasing system becoming synchronized?
1. Slave pulses compare with master pulses → error voltages delivered to amplifier and speed bias servomotor simultaneously
2. Pulses from propeller fed to synchrophaser → slave pulses compared with master pulses → error voltages delivered to amplifier → amplifier output delivered to pilot valve
3. Pulses from propellers fed to synchrophaser → slave pulses compared with master pulses → error voltages fed directly to 2-phase motor in servocontrol assembly
4. Pulses from propellers fed to synchrophaser → slave pulses compared with master pulses → error voltages delivered to amplifier → speed bias servomotor reacts to amplifier signal → slave engine speed changes

6-48. If the master propeller's No. 1 blade reaches the 12 o'clock position at the same time the slave propeller's No. 1 blade reaches the 6 o'clock position, the phase relationship between the two propellers is said to be
1. leading
2. lagging
3. on-phase
4. in-phase

6-49. Refer to figure 8-10. During a propeller underspeed condition, V206A experiences which of the following input voltage changes?
1. A sudden change from positive to negative
2. A sudden change from negative to positive
3. A slow change from positive to negative
4. A slow change from negative to positive

6-50. Correlate figures 8-10 and 8-13. In figure 8-13, the point identified as SIGNAL SUMMING POINT can be traced in figure 8-10 as the input to
1. off-speed tube, V206B
2. phase difference tube, V206A
3. No. 2 winding of the magnetic modulator
4. phase and trim control circuits

- Refer to figure 8-13 in answering items 6-51 and 6-52.

6-51. Which of the following statements is correct concerning a condition in which the phase control potentiometer is adjusted to cancel the phase difference voltage at the summing point?
1. The slave propeller will assume master control
2. The slave propeller will operate with zero lag or lead
3. The slave propeller will operate independently of the master propeller
4. The slave propeller will maintain a specific angle with the master propeller, either zero degrees or a specified lag or lead

6-52. Zener diodes VR405 and VR408 function to connect the speed error circuit to the summing point when an off-speed condition exists. What is their function during an on-speed condition?
1. To isolate the speed error circuit from the summing point
2. To connect the speed error circuit to ground
3. To prevent formation of transients in the speed error circuit
4. To function the same as during an off-speed condition

6-53. Whenever the master engine goes off speed, the slave propeller speed can change by what maximum percentage?
1. 5%
2. 2%
3. 3%
4. 4%

6-54. What is the purpose of resynchrophasing?
1. To overcome small errors of lead and lag about a set point
2. To provide for antihunt by correcting for overshoot
3. To move the feedback potentiometer and cancel a portion of the error signal to correct for accumulated one-direction errors

- Refer to table 8-2 in answering items 6-55 through 6-58.

6-55. While in the synchrophasing mode an underspeed condition on one of the engines is noted, but the pulse inputs to the synchrophaser appear correct. The problem is in the
1. synchrophaser
2. pulse generator
3. power source
4. speed bias servo assembly feedback potentiometer

In answering items 6-56 through 6-58, select from column B the probable cause of each of the troubles listed in column A.

	A. Troubles	B. Probable Causes
6-56.	Oscillations in engine speed in synchrophasing or normal governing	1. Poor connections
		2. Throttle lever switch
6-57.	Erratic governing in synchrophasing mode or in normal governing	3. Tachometer generator
6-58.	One slave engine stays at one speed	4. Open circuit breakers

---

Learning Objective: Recognize names, functions, and operating and physical characteristics of propeller control system components.

6-59. A minimum desired low-pitch blade angle is maintained by a
1. magnetic latching assembly
2. hydraulic lever assembly
3. electrical solenoid assembly
4. mechanical stop assembly

6-60. What is the purpose of the Beta followup stop?
1. To provide a secondary stop setting at 13° blade angle only
2. To provide a secondary low-pitch stop
3. To prevent negative-torque system failure
4. To prevent minor reductions in blade angle

6-61. The pitchlock mechanism will automatically engage when rpm is greater than 103.5% and when
1. there is a loss of control oil pressure
2. blade pitch is less than 57 degrees at 405 knots
3. the Beta followup system malfunctions
4. the pitchlock governor hydraulic pressure exceeds 103.5 psi

6-62. Pitchlock is blocked out between blade angles of +57° and +86° to permit
1. rpm surges during approaches
2. rpm surges during landings
3. reducing the blade angle for takeoffs and landings
4. reducing the blade angle for air starting

-63. Placing the fuel governor and propeller pitchlock test switch in TEST position will result in
1. resetting the blade angle to the proper angle for an air start
2. an increase in pitch
3. a momentary blockout of the pitchlock mechanism
4. resetting propeller governor rpm to ground check pitchlock functions

-64. When needed, the negative torque system functions to
1. generate a negative torque
2. eliminate propeller cycling actions
3. increase blade angle
4. limit positive horsepower

6-65. The system that limits negative torque when the negative torque system fails during inflight unfeather operations is called the
1. NTS INOP warning system
2. feather position activation system
3. airstart blade angle system
4. emergency override system

6-66. Pulling the engine emergency shutdown handle is one way of
1. autofeathering
2. unfeathering
3. initiating feathering
4. bypassing hydraulic fluid around the feather valve

6-67. When actuated, the feather pump pressure cutout override switch does what to the feather pump pressure cutout switch?
1. Bypasses it
2. Opens it
3. Closes it

6-68. Which of the following statements is NOT correct concerning the feathering switches?
1. They are guarded against inadvertent operations
2. Each is moveable to NORMAL, FEATHER, and UNFEATHER
3. Each contains an indicator light
4. A light in each switch illuminates when its respective propeller is feathered

6-69. The automatic feathering system is used during
1. takeoffs only
2. landings only
3. takeoffs and landings only
4. takeoffs, landings, and inflight emergencies

6-70. (a) The autofeather arming switch and (b) the power lever quadrant switch must be in what condition to activate the thrust signal device to cause autofeathering?
1. (a) closed (b) open
2. (a) open (b) closed
3. (a) closed (b) closed
4. (a) open (b) open

6-71. What is indicated when the four autofeather system indicator lamps are illuminated?
1. All autofeather systems are armed
2. The autofeather system is malfunctioning
3. One of the propellers is being automatically feathered
4. All of the propellers are being automatically feathered

6-72. What controls propeller blade pitch and engine fuel flow when the power levers (throttles) are between 0 and 34 degrees?
1. Prop governors control prop pitch and temp datum system controls engine fuel flow
2. Synchrophaser system controls prop pitch and power levers control engine fuel flow
3. Power levers control both blade pitch and engine fuel flow through hydromechanical linkage
4. Temp datum system controls both blade pitch and engine fuel flow through hydromechanical linkage

6-73. Which of the following actions directly results in unfeathering the propeller?
1. Pulling out on the feather switch
2. Disarming autofeather
3. Pushing in on the emergency engine shutdown handle
4. Pushing in on the feather switch

Assignment 7

Power Plant and Aircraft Environmental Systems; Maintenance Techniques

Text: Pages 243 - 269

Learning Objective: Recognize the purpose and principles of operation of the cabin air-conditioning and pressurization system, including its circuits and components, and indicate effects of altitude changes on cabin pressure.

7-1. The cabin air-conditioning and pressurization system maintains the cabin air temperature and pressure at a comfortable and safe level by forcing which of the following airs through cockpit diffusers?
1. Hot engine bleed air and dehumidified refrigerated air
2. Hot engine bleed air only
3. Dehumidified refrigerated air only
4. Ambient refrigerated air and humidified hot engine bleed air

7-2. Cabin air pressure is controlled by which of the following combinations?
1. A safety valve and a manual dump control only
2. A pressure regulator and a safety valve only
3. A manual dump control and a pressure regulator only
4. A manual dump control, a safety valve, and a pressure regulator

● Refer to figure 8-16 in answering items 7-3 through 7-5.

7-3. With the cockpit switch in the ON position, desired cabin temperature is maintained by which of the following?
1. Variation in the opening of the ram air valve
2. Proportional amounts of ram air and refrigerated air being mixed by the ram air valve
3. Proportional amounts of ram air and engine hot air being mixed by the ram air valve
4. Proportional amounts of engine hot air and refrigerated air being mixed by the dual temperature control valve

7-4. With the cockpit switch in the ON position, opening and closing of the dual control valve may be controlled by a signal from
1. the cabin duct dual temperature sensor if the air supply's temperature changes
2. either the HOT or COLD contact of the MAN/RAM AIR switch
3. the cabin temperature sensor when the MAN/RAM AIR switch is on AUTO
4. any of the above

7-5. What are the conditions of the various valves when the cockpit switch is in the RAM AIR position?
1. The dual temperature control valve is in the full HOT position, the cabin bleed air valve is closed, and the cabin ram air valve is as selected by the MAN/RAM AIR switch
2. The dual temperature control valve is as selected by the MAN/RAM AIR switch and the cabin ram air valve is closed
3. Both dual temperature control valves are closed and the cabin ram air valve is as selected by the MAN/RAM AIR switch
4. Both dual temperature control valves are open and the cabin ram air valve is as selected by the MAN/RAM AIR switch

7-6. Which of the following statements is correct concerning cabin pressure at various altitudes?
1. Cabin pressure is maintained at sea level pressure at all altitudes
2. Up to 8,000 feet cabin pressure is held at the 8,000 feet pressure, and above 8,000 feet a 5-psi differential is maintained between the cabin and ambient pressures.
3. Up to 8,000 feet cabin pressure is maintained at sea level pressure, and above 8,000 feet cabin pressure is held at the 8,000 feet pressure
4. Up to 8,000 feet cabin pressure is the same as ambient pressure; above 8,000 feet cabin pressure remains at the 8,000 feet pressure until a differential of 5 psi exists between cabin and ambient pressures, and beyond this altitude the pressure differential remains at 5 psi

7-7. Under which set of conditions will the right forward and aft equipment compartments receive moist, cooled bleed air?
1. Equipment cooling valve open, ram air valves open, temperature below 46° C
2. Equipment cooling valve open, ram air valves closed, temperature above 46° C
3. Equipment cooling valve closed, ram air valves open, temperature below 46° C
4. Equipment cooling valve closed, ram air valves open, temperature above 46° C

7-8. When an overpressurization occurs, the overpressure is dumped into what compartment(s)?
1. Luggage compartment
2. Forward equipment compartment only
3. Aft equipment compartment only
4. Forward and aft equipment compartments

In answering items 7-9 through 7-11, select from column B the function of each of the bridge circuits listed in column A.

A. Bridge Circuits	B. Functions
7-9. Cabin temp	1. Develops a dc voltage that overrides the cabin temperature bridge circuit in the event that the cabin temperature exceeds the set limit
7-10. Cabin duct limit	2. Develops a dc voltage that controls the cabin temperature in the event that the air inlet duct temperature makes a sudden change
7-11. Cabin duct anticipator	3. Develops a dc voltage that causes the cabin temperature to hold around a preset level
	4. Develops a dc voltage that varies the aperture size of the cockpit diffusers to control the air flow rate

7-12. Refer to figure 8-19. What is the purpose of T2 and the circuit formed by CR3 through CR6?
1. To demodulate the dc error voltage
2. To demodulate the ac error voltage
3. To dc modulate the ac error voltage
4. To ac modulate the dc error voltage

7-13. The voltage from the feedback potentiometer in the cabin dual temperature control valve is used to
1. cause the valve actuator motor speed to increase, giving more positive control of the temperature regulation
2. ensure that the error feedback signal to the modulator circuit is of the correct phase
3. reduce the error voltage once the valve actuator motor has started rotating
4. accomplish all of the above

Learning Objective: Recognize the supervisor's responsibilities in organizing, supervising, and training.

7-14. Which of the following should be your main objective as a shop supervisor?
1. Maximize production; be a friendly supervisor
2. Minimize costs; stagger work loads
3. Be a friend first; a boss second
4. Maximize production and safety; minimize costs; operate harmoniously

7-15. An effective training program is based on the assumption that personnel at all levels need continuous training because it will
1. provide retirees with marketable skills
2. ensure a lower turnover of the most experienced workers
3. provide outstanding divisional training records for inspections
4. assist in advancement examinations and increase divisional skill levels

7-16. In a well-organized shop, a supervisor should delegate authority to subordinates because this will allow him
1. more time for perfecting his specific job-related skills
2. more time to complete self-study courses for professional advancement
3. relief from on-the-job details and more time to devote to supervision
4. less responsibility for completed jobs

Learning Objective: Identify desirable layout characteristics of working spaces, including equipment utilization, and recognize factors of safety training and the supervisor's role therein.

7-17. Which of the following is most descriptive of the primary objective to be attained in arranging a repair facility shop?
1. Centralized tool storage
2. Appearance
3. Usefulness
4. Utilization of all corner spaces

7-18. Assume that a new test bench has been delivered to the avionics shop. Which of the following actions should the shop supervisor take?
1. Evaluate shop space and place the new test bench in the area which affords the most workspace
2. Evaluate shop space and rearrange equipment to the extent necessary to ensure total shop utilization
3. Place the new test bench in the general area of other similar benches
4. Locate the new test bench near the power inlet to the shop

7-19. When arranging test benches in a proposed shop, a supervisor should ensure that they are located
1. close to permanently installed equipment
2. away from equipment that could cause interference in testing
3. close to the main entrance
4. in a space large enough for 360-degree bench access

7-20. The most effective means a supervisor has for ensuring proper care and use of hand tools is to assign new personnel to
1. class A schools
2. on-the-job training
3. formal lectures
4. after-hours instruction

7-21. Aircraft maintenance personnel should be thoroughly and continuously indoctrinated in safe work habits and receive safety training because these programs are essential to
1. safe flying, safe maintenance, and aircraft readiness
2. maintenance personnel safety
3. flying personnel safety
4. aircraft readiness only

7-22. High-quality maintenance is evidence that maintenance crews have
1. excellent working conditions
2. an abundance of personnel
3. new and adequate tools
4. good supervision

7-23. A shop supervisor can work to reduce aviation maintenance accidents by any or all of the following ways EXCEPT
1. inspecting work areas and equipment
2. interpreting safety directives for assigned personnel
3. recommending court-martials for minor infractions of safety directives
4. organizing and administering safety programs

7-24. What areas used by squadrons should the avionics shop supervisors inspect for the detection and correction of safety hazards?
1. Hangar and shop spaces and tool cribs
2. Shop and line spaces and disposal facilities for inflammable materials
3. Shop, hangar, and line spaces and disposal facilities for inflammable materials
4. All spaces pertinent to avionics work

7-34. One advantage to the system of on-the-job training is that OJT
1. provides the supervisor a chance to show his expertise
2. allows for the completion of required maintenance as well as for training
3. affords the supervisor more time for his own projects and study
4. eliminates the necessity for maintaining training records

Learning Objective: Recognize the supervisor's role in the planning and accomplishment of maintenance work, and identify maintenance practices and troubleshooting procedures, including the use of references, records, test equipment.

7-35. NAVAIRSYSCOMREPLANT/PACINST 1500.2 (Series) lists certain short courses that emphasize troubleshooting, alignment, specialized training, and bench work on various aircraft accessories. These courses are offered by
1. NAMTRADET
2. NAVAIREWORKFAC
3. FASOTRAGRU
4. NAVAIRDEVCEN

7-36. When a discrepancy report has been received, the supervisor who determines the best way to effect repairs, considering personnel assignments, necessary equipment, and priority, is in effect making which of the following?
1. A job plan
2. A job priority
3. A coordination policy
4. A program integration plan

7-37. Which of the following statements concerning service publications distributed by some aircraft manufacturers is correct?
1. Compliance with the procedures outlined therein is mandatory
2. They are used if a Maintenance Instructions Manual (MIM) is not readily available
3. They provide troubleshooting and servicing hints
4. They provide a detailed parts breakdown

7-38. A supervisor can best gain knowledge of the maintenance abilities and experience of his technicians by
1. giving written and oral tests
2. referring to their evaluation sheets in their service records
3. performing proper supervision of jobs in progress
4. checking equipment history cards to determine reliability of repaired equipments

7-39. Upon job completion by the AE shop, responsibility for ensuring that the work is inspected lies with the
1. person performing the job
2. quality assurance division
3. senior AE in the work center
4. maintenance control division

7-40. Which of the following statements is correct concerning the checkflight checklist used by an organizational activity?
1. It is made up locally and retained until completion of the next checkflight
2. It is printed and distributed by the operational commander and retained for a minimum of one calendar period
3. It is promulgated by the type commander and forwarded to him upon completion of the checkflight
4. It is promulgated by NAVAIRSYSCOM and retained by the activity for a minimum of six months upon completion of the checkflight

7-41. Performance testing data found in the Maintenance Instructions Manual for a specific electrical equipment helps the electrician to perform all of the following procedures EXCEPT
1. make performance checks on the equipment
2. determine if corrective maintenance is needed
3. determine if the equipment is operating properly
4. order replacement parts for low-level items

7-25. When replacing a plug on a three-wire cord, you should ensure that the white wire is connected to
1. the bright terminal only
2. the round terminal
3. the natural brass-colored terminal only
4. either the bright- or natural brass-colored terminal

7-26. The three basic elements of an effective safety program simply stated are
1. publicity, training, and followup
2. detection, enforcement, and punishment.
3. stimulation, motivation, and punishment
4. planning, participation, and prediction

7-27. You have a new man checking into your shop. When should you start indoctrinating him in shop safety?
1. When you first notice his bad safety habits
2. As soon as possible after he reports for work
3. At the first regular scheduled training class
4. After he has been assigned long enough to become familiar with equipment and procedures

7-28. In addition to requiring each member of the work center to read new safety directives, the work center supervisor should review each safety directive and explain its significance to his people because
1. Navy Regulations requires these procedures
2. a safety directive will have more significance if each crewmember is aware of its particular application to him
3. safety directives are usually written in such all-inclusive phraseology that interpretation by an experienced member is necessary
4. oral explanations are double assurance that the crew is aware that the directive has been issued

---

Learning Objective: Point out elements of a training program for electricians, including curriculum, teaching techniques and methods, and training materials and facilities available.

7-29. Which of the following broad types of electronics training should be conducted for electric shop personnel? A program that includes
1. general electrical subjects only
2. specific electrical subjects only
3. laboratory-type training in all electrical phases
4. both general and specific electrical subjects

7-30. What officer must approve the lesson plans developed by the shop supervisor?
1. Commanding officer
2. Executive officer
3. Education officer
4. Maintenance officer

7-31. A conscientious supervisor will find many excellent suggestions for training methods in the latest revision of
1. Bibliography for Advancement Study, NAVEDTRA 10052
2. Navy Enlisted Manpower and Personnel Classification and Occupational Standards, NAVPERS 18068
3. Manual for Navy Instructors, NAVEDTRA 107
4. Aviation Electrician's Mate 3 & 2, NAVEDTRA 10348

7-32. The principal reason for extreme thoroughness in teaching a fundamental is that
1. when it is later applied in more advanced study, the trainee should experience little difficulty in understanding its application
2. the trainee will become indoctrinated into classroom procedure
3. discipline in a learning situation is achieved
4. after all the fundamentals have been taught, the trainee can assemble them into integrated concepts without further instruction

7-33. In lieu of laboratory training, practical application of principles taught in classroom type instruction should be accomplished by having the trainee perform
1. simulated maintenance on training aids
2. theoretical maintenance on hypothetical equipment
3. actual maintenance on training aids
4. actual maintenance on operational equipment

7-42. Which grouping is most inclusive of the advantages of keeping careful records of performance data on electrical equipments? The data may be used in
1. training maintenance personnel, detecting slow performance drifts, making trend analyses, and maintaining equipment at desirable operating levels
2. detecting slow performance drifts, making trend analyses, and maintaining equipment at desirable operating levels
3. training maintenance personnel, maintaining equipment at desirable operating levels, and detecting slow performance drift
4. detecting maintenance personnel procedure errors, making trend analyses, and detecting slow performance drifts

7-43. The word systematic as applied to troubleshooting electronic equipment means
1. elimination of unnecessary steps leading to the trouble area, followed by a rigid, step-by-step progression through the trouble area
2. a logical, step-by-step procedure whereby testing proceeds from end to end in an undeviating progression
3. a logical progression, whether or not in an undeviating step-by-step procedure, to accomplish an end
4. testing of the equipment as a whole, or as a complete system, so that all test results are visible simultaneously

7-44. When should installed electrical equipment that has been reported faulty be removed for bench checking and troubleshooting?
1. Only after a thorough visual inspection has failed to reveal a possible cause of the trouble and it has been determined that the power input is proper
2. Only after a thorough visual inspection has failed to reveal a possible cause of the trouble
3. Only after it has been determined that the equipment is in fact faulty and cannot be repaired while installed
4. As soon as a replacement unit can be installed

7-45. In a systematic approach to corrective maintenance, which of the following best describes the logical sequence of troubleshooting to be followed to isolate the trouble?
1. System, element, unit, stage
2. Element, unit, stage, component
3. System, unit, stage, component
4. Stage, component, element, unit

7-46. When comparing voltages in electrical equipment with voltage readings listed on a chart, you should use a voltmeter of the same sensitivity as was used when the voltage chart was made because
1. the effects of meter loading will not have to be considered
2. readings on a meter of any other sensitivity will be useless because they will not be the same as those on the chart
3. the loading effect of the meter will cause each circuit to which it is applied to become inoperative
4. the range selections on a meter of any other sensitivity will not be the same as those on the meter used in making the chart

7-47. When you take ohmmeter readings, which of the following actions is of paramount importance to ohmmeter protection?
1. Select a meter of the same sensitivity as the one used in making the resistance chart
2. Ensure that power is not applied to circuits when measurements are being made
3. Ensure that a high meter scale is selected for the intial reading
4. Disconnect filter capacitors that are installed in the equipment to be tested

7-48. You are using an oscilloscope and you observe that a waveform differs slightly from the reference waveform shown in the maintenance publication. Generally, to save time, which of the following should you do?
1. Replace an associated component to improve the waveform
2. Assume the oscilloscope is bad and try another one
3. Assume the test leads are bad and try another set
4. Consider the difference insignificant

7-49. Relative to weapons systems, accomplishing component repair at the lowest maintenance level is intended to have what effect on the weapons systems?
1. Improve their cost effectiveness
2. Increase their long-range capabilities
3. Decrease their down time
4. Shorten their repair cycle

7-50. In order to repair miniaturized circuits and components, activities should have which of the following?
1. A depot level maintenance capability
2. Specially trained personnel and certified facilities
3. Specially trained personnel only
4. Certified facility capabilities only

Assignment 8

Maintenance Techniques; Test Equipment

Text: Pages 270 - 297

Learning Objective: Recognize the AE's need for updated knowledge of drawings and schematics, including a technique for working with them.

8-1. Which of the following statements is correct concerning connecting test equipment to transistors?
1. Voltage polarity makes no difference, but voltage amplitude must be considered
2. Voltage amplitude makes no difference, but voltage polarity must be considered
3. Neither voltage amplitude nor voltage polarity need be considered
4. Both voltage amplitude and voltage polarity must be considered

8-2. Which of the following is NOT a valid reason why an AE should keep abreast of changes in drawing symbols?
1. It may be necessary to draw a simpler version of a complicated drawing
2. Training of subordinates requires him to be up-to-date in interpreting drawings
3. He needs that knowledge in understanding the drawings with which he comes in contact
4. He is required to draw all divisional schematics

8-3. Standard electrical symbols for use by the Department of Defense are listed in
1. OPNAVINST 5442
2. NAVAIR 01-1A-505
3. NAVAIR 00-80T-79
4. IEEE No. 315

8-4. The requirement for AEs to learn interpretation of mechanical drawings has been necessitated largely by
1. the necessity for aircraft manufacturers to locate electronic equipment in almost inaccessible areas
2. integrated packaging techniques which employ multiple-cable interconnections
3. the advent of more complex electronic systems using computers and other mechanical devices
4. schematics being drawn in block and signal-flow type diagrams

8-5. An AE can often make a circuit schematic more understandable by redrawing it and omitting much of the detail. Such procedures are called
1. simplifying
2. reduction
3. fundamentalizing
4. sectionalization

Learning Objective: Recognize maintenance problems related to altitude and climatic conditions, and identify methods and devices used in controlling those problems.

8-6. At high altitudes, the possibility of arc-over in connectors is reduced by sealing them with
1. glyptal
2. varnish
3. potting compound
4. epoxy

8-7. An AE checking over an NC-5 powerplant receives a shock when he comes in contact with one of the insulated spark plug leads. Inspection of the lead fails to reveal any breaks in the insulation. What conclusion should he draw about this condition?
1. The properties of the insulation have changed as a consequence of heat, and it no longer acts as an insulator
2. One of the spark plugs is failing to fire
3. The insulation has absorbed moisture and no longer acts as an insulator
4. Ignition voltage is too high

8-8. One way of minimizing condensation within equipment that operates under varying conditions of altitude and climate is by
1. maintaining the interior temperature of the equipment higher than the temperature of the surrounding atmosphere
2. providing good ventilation for the equipment
3. placing porous bags filled with silica-gel inside the equipment
4. treating the inside surfaces of the equipment with an anticondensation compound

8-9. Fungus forms readily in conditions of
1. high temperature and low humidity
2. low temperature and low humidity
3. low temperature and high humidity
4. high temperature and high humidity

8-10. Which of the following statements concerning corrosion in battery compartments and surrounding areas is correct?
1. Corrosion in these areas can be eliminated by use of outside vents and overboard drains
2. Corrosion in these areas can be eliminated by applying a protective coat of lacquer or varnish over the battery container
3. Corrosion cannot be eliminated in these areas because electrolytic fumes spread and cause corrosion on unprotected surfaces
4. Use of conventional corrosion treatments can eliminate all corrosion in these areas

---

Learning Objective: Recognize various types of radio noises and the methods and devices used in controlling them, including filter characteristics.

8-11. In order for an AE to take action on correcting radio noises, he should have a knowledge of all the following EXCEPT
1. what radio interference is and how to identify it
2. where the interference originates and how it gets into the equipment
3. how to segregate the paths of noise entry into a receiver and how to suppress noise at its source
4. magnetic anomaly detection and measurement

8-12. Interference caused by atmospheric static is minimized in equipment employing
1. single-sideband modulation
2. pulse modulation
3. frequency modulation
4. amplitude modulation

8-13. Discharge wicking is installed on aircraft to reduce interference from
1. precipitation static
2. manmade noise
3. atmospheric static
4. audio-frequency hum

8-14. An AE's major concern with precipitation static is usually that of
1. cause
2. suppression
3. elimination
4. identification

8-15. In a generator, the main source of radio interference is the
1. brushes
2. stator
3. rotor
4. bearings

8-16. What method of interference elimination is the only suitable means of preventing radio interference from aircraft ignition systems?
1. Insulating all radio antennas
2. Using filters at the inputs to radio receivers
3. Enclosing all ignition components in metal shielding
4. Orienting antennas so that induction of noise frequencies is at a minimum

8-17. What is most likely the nature of electrical interference that is caused by a properly adjusted carbon-pile regulator?
1. Thermal agitation
2. Irregular arcing
3. Regular arcing
4. AC hum

8-18. What is the simplest and most practical method for reduction of interference caused by manmade radio noise?
1. Shielding of receiving equipment
2. Isolation of noise sources
3. Bonding of insulated parts of the aircraft structure
4. Filtering of communication-equipment power lines

8-19. Proper shielding helps prevent radio-frequency interference by
1. dissipating the noise radiation in the form of low-frequency energy
2. confining the noise radiation within filter networks
3. confining the noise radiation within the enclosure surrounding the source of the noise energy
4. dissipating the noise radiation in the form of high-frequency energy

8-20. The low-pass filter is designed to attenuate which frequencies?
1. Those frequencies equal to the cutoff frequency
2. All frequencies above the cutoff frequency
3. All frequencies below the cutoff frequency
4. All frequencies above and below the cutoff frequency

- Refer to figure 8A in answering items 8-21 through 8-23. The figure shows the approximate characteristics of various types of filters. The symbol f_c represents the frequencies (called cutoff frequencies) at which the attenuation changes rapidly.

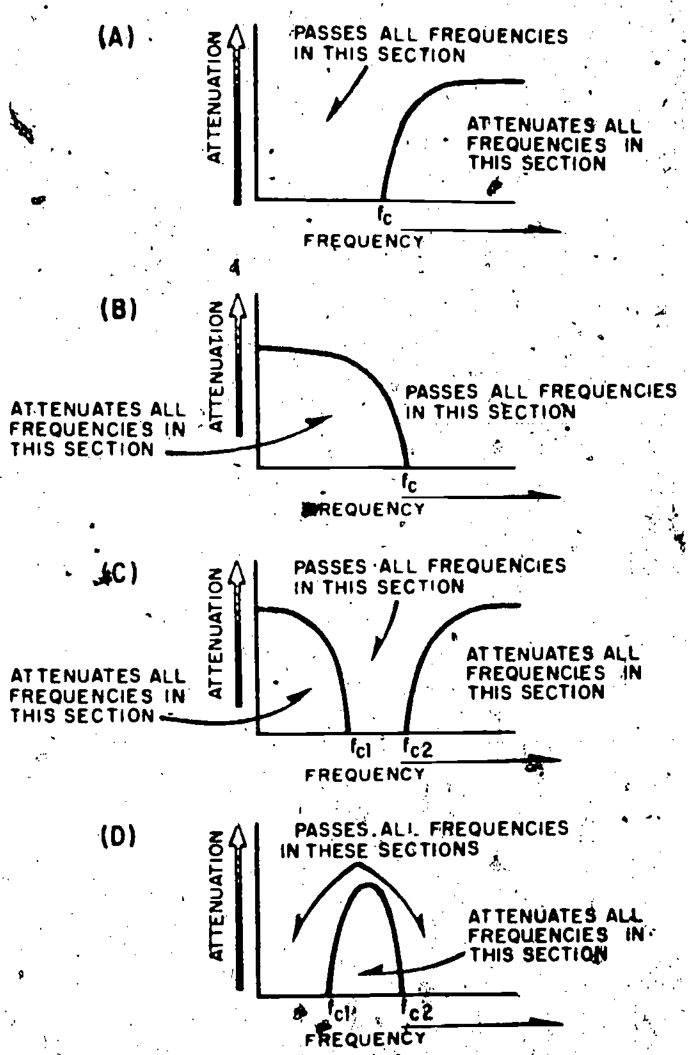

Figure 8A--Filter response curves.

8-21. An aircraft intercom system is experiencing 400-Hz interference from the aircraft's power system. What filter characteristic shown in the figure would be best for removing this 400-Hz interference?
1. Type A, with f_c equal to 400 Hz
2. Type B, with f_c equal to 420 Hz
3. Type C, with f_{c1} equal to 200 Hz and f_{c2} equal to 4000 Hz
4. Type D, with f_{c1} equal to 380 Hz and f_{c2} equal to 420 Hz

8-22. The band-elimination filter attenuates all frequencies that are
1. above the operating range of the filter
2. below the operating range of the filter
3. above or below the operating range of the filter
4. within the operating range of the filter

8-23. It is necessary to incorporate in the antenna circuit of a receiver a filter that will reject all frequencies except the narrow band of operating frequencies normally received by the equipment. What filter characteristic shown in the figure is most suitable for this purpose?
1. A
2. B
3. C
4. D

8-24. Capacitors are most popularly used as filters because
1. of their small size
2. of their small expense
3. of their high breakdown voltage characteristics
4. load current does not pass through them

Learning Objective: Recognize design characteristics and operating principles of phase angle and differential voltmeters, including their operational advantages, and identify internal voltage and current values which occur during operational adjustment of the differential voltmeter.

8-25. Meters, oscilloscopes, and signal generators are classified as what type of test sets?
1. Versatile avionics shop
2. Intermediate level
3. General purpose
4. Special purpose

8-26. How does the phase angle voltmeter excel over the oscilloscope in the measurement of phase angles or phase shift between voltages? The phase angle voltmeter measures
1. larger angles, and eliminates harmonics
2. the sine and cosine of angles and phase shifts
3. smaller angles, and greatly attenuates harmonics
4. the characteristics of harmonics in relation to the fundamental frequency

Refer to figure 10-1 in answering items 8-27 through 8-29.

8-27. The reference input signal can be phase shifted to what points of the cycle?
1. 0° and 90° only
2. 90° and 180° only
3. Any point in the 360° cycle
4. 0°, 90°, 180°, and 270° only

8-28. The amplitude of the output from the phase detector is calculated to be the amplitude of the
1. reference signal minus the amplitude of the input signal
2. input signal times the amplitude of the reference signal
3. reference signal times the cosine of the phase angle between the two input signals
4. input signal times the cosine of the phase angle between the two input signals

8-29. Most meters are set to provide quadrature indication rather than in phase or 180° out of phase indication because
1. amplitude difference does not influence the reading
2. amplitude difference as well as phase difference is indicated
3. the needle's rate of movement is slower when the phase angle is 90°
4. the needle's rate of movement is faster when the phase angle is 90°

- Items 8-30 through 8-34 pertain to the differential voltmeter.

8-30. What method is employed in the voltmeter to determine the value of an unknown voltage?
1. A switching arrangement permits switching between the unknown voltage and test-set voltage so that identical meter deflections can be observed
2. A switching arrangement permits the unknown voltage to be read on one side of a center-zero meter, and the test-set balancing voltage to be read on the other side
3. The unknown voltage is balanced out by voltage supplied by the test set, and the value of test-set voltage thus required is read from dials
4. The unknown voltage is balanced out by voltage supplied by the test set, and the value of test-set voltage thus required is read from a meter

- Refer to figure 10-4 in answering items 8-31 and 8-32.

8-31. How much of the reference voltage is used when switch S2E is placed in the 50V,A.C. position?
1. 0.5 volt dc
2. 5.0 volts dc
3. 50.0 volts dc
4. 500.0 volts dc

8-32. What is the highest voltage that can be selected by switch S8 when S2E is in the 500V,D.C. position and all other switches are adjusted to select maximum voltage?
1. 0.0001 v
2. 0.01 v
3. 0.1 v
4. 1.0 v

8-33. Unlike the conventional VTVM, the differential voltmeter places no load on the circuit being tested because
1. the instrument presents an input impedance of 10 megohms
2. the meter operates on the induction principle and draws no current
3. current drawn from the circuit being tested is circulated back to the circuit
4. no current is drawn from the circuit being tested when the meter shows zero reading

8-34. Before being applied to the converter amplifier, all ac voltages above 5 volts are reduced to 5 volts by the action of
1. attenuators
2. voltage dividers
3. voltage regulators
4. capacitor choppers

Learning Objective: Identify the general operating features and capabilities of the Fluke Model 8100A digital multimeter.

8-35. Which of the following is NOT a standard feature of the digital multimeter?
1. It has a selectable input filter.
2. It has a full four-digit readout
3. It operates from either 115 volts or 230 volts
4. It will measure a maximum of 2,000 volts ac or dc.

8-36. In the dc volts section, at which of the following levels of voltage will the multimeter likely sustain damage?
1. 1,400 volts
2. 1,200 volts
3. 1,000 volts
4. 600 volts

8-37. With a frequency between 50 Hz and 10 kHz, what percent of accuracy may be expected of the multimeter's ac volts section?
1. 0.0005%
2. 0.01%
3. 0.05%
4. 0.1%

8-38. If a 9,000-ohm resistor is measured on the 10k range, the input terminals will have which of the following voltages impressed?
1. 1.00 V
2. 9.00 V
3. 0.90 V
4. 0.09 V

Learning Objective: Identify operating principles and capabilities of time-domain reflectometry (TDR) equipment, and interpret TDR scope presentations.

8-39. Time-domain reflectometry (TDR) is particularly useful to the AE in analyzing which of the following?
1. Oxygen and fuel quantity
2. Flap position and landing gear position
3. Oil pressure and temperature indicators
4. Airspeed and altitude indicators

COURSE DISENROLLMENT

All study materials must be returned. On disenrolling, fill out only the upper part of this page and attach it to the inside front cover of the textbook for this course. Mail your study materials to the Naval Education and Training Program Development Center.

PRINT CLEARLY

NAVEDTRA Number	COURSE TITLE
10349-D	AVIATION ELECTRICIAN'S MATE 1 & C

Name Last First Middle

Rank/Rate Designator Social Security Number

COURSE COMPLETION

Letters of satisfactory completion are issued only to personnel whose courses are administered by the Naval Education and Training Program Development Center. On completing the course, fill out the lower part of this page and enclose it with your last set of self-scored answer sheets. Be sure mailing addresses are complete. Mail to the Naval Education and Training Program Development Center.

NAME

ZIP CODE

MY SERVICE RECORD IS HELD BY:

Activity

Address ZIP CODE

Signature of enrollee

PDD Form 111

A FINAL QUESTION: What did you think of this course? Of the text material used with the course? Comments and recommendations received from enrollees have been a major source of course improvement. You and your command are urged to submit your constructive criticisms and your recommendations. This tear-out form letter is provided for your convenience. Typewrite if possible, but legible handwriting is acceptable.

Date ____________________

From: ______________________________
____
______________________________ ZIP CODE __________

To: Naval Education and Training Program Development Center (PD7)
Building 922
Pensacola, Florida 32509

Subj: Comments on course and text for Aviation Electrician's Mate 1 & C, NAVEDTRA 10349-D

1. The following comments are hereby submitted:

CE 008 444

(Fold along dotted line and staple or tape)

……

(Fold along dotted line and staple or tape)

……

DEPARTMENT OF THE NAVY

NAVAL EDUCATION AND TRAINING PROGRAM
DEVELOPMENT CENTER (PD 7)
PENSACOLA, FLORIDA 32509

OFFICIAL BUSINESS
PENALTY FOR PRIVATE USE, $300

POSTAGE AND FEES PAID
DEPARTMENT OF THE NAVY
DOD-316

NAVAL EDUCATION AND TRAINING PROGRAM DEVELOPMENT CENTER (PD 7)
BUILDING 922
PENSACOLA, FLORIDA 32509