DOCUMENT RESUME

ED 090 980 IR 000 591

AUTHOR Nauta, Franz; Pierce, Michael B.
TITLE United States Air Force Training Line Simulator. Final Report.
INSTITUTION Air Force Human Resources Lab., Brooks AFB, Texas.; Decision Systems Associates, Inc., Rockville, Md.
REPORT NO AFHRL-TR-73-61
PUB DATE Dec 73
NOTE 51p.

EDRS PRICE MF-$0.75 HC-$3.15 PLUS POSTAGE
DESCRIPTORS Aerospace Education; Dropout Rate; *Facility Utilization Research; Flexible Scheduling; Input Output Analysis; Military Training; *Scheduling; Simulated Environment; *Simulation; *Simulators; Technical Education
IDENTIFIERS Training Line Simulator; United States Air Force

ABSTRACT

This report describes the technical aspects and potential applications of a computer-based model simulating the flow of airmen through basic training and entry-level technical training. The objective of the simulation is to assess the impacts of alternative recruit classification and training policies under a wide variety of assumptions regarding such parameters as course prerequisites, attrition and setback rates, class schedules and quotas, and a number of individual airman attributes. The model's results include determinations of maximum percent fills of quotas, sizes of waiting lines for courses, student-instructor ratios, and setback and attrition rates. The report also gives an extensive description of input control cards and files necessary to run the simulation. (WDR)

ED 090980

U S DEPARTMENT OF HEALTH
EDUCATION & WELFARE
NATIONAL INSTITUTE OF
EDUCATION

AFHRL-TR-73-61

AIR FORCE HUMAN RESOURCES LABORATORY

UNITED STATES AIR FORCE TRAINING LINE SIMULATOR

By

Franz Nauta
Michael Pierce
Decision Systems Associates, Inc.
Rockville, Maryland 20852

Manpower and Personnel Systems Division
Lackland Air Force Base, Texas 78236

December 1973

Approved for public release; distribution unlimited.

AIR FORCE SYSTEMS COMMAND
BROOKS AIR FORCE BASE, TEXAS 78235

IR 000 484

NOTICE

When US Government drawings, specifications, or other data are used for any purpose other than a definitely related Government procurement operation, the Government thereby incurs no responsibility nor any obligation whatsoever, and the fact that the Government may have formulated, furnished, or in any way supplied the said drawings, specifications, or other data is not to be regarded by implication or otherwise, as in any manner licensing the holder or any other person or corporation, or conveying any rights or permission to manufacture, use, or sell any patented invention that may in any way be related thereto.

This final report was submitted by Decision Systems Associates, Inc., 11428 Rockville Pike, Rockville, Maryland 20852, under contract F41609-70-C-0047, Project 6323, with the Manpower and Personnel Systems Division, Air Force Human Resources Laboratory (AFSC), Lackland Air Force Base, Texas 78236. Mr. Manuel Pina was the contract monitor.

This report has been reviewed and cleared for open publication and/or public release by the appropriate Office of Information (OI) in accordance with AFR 190-17 and DoDD 5230.9. There is no objection to unlimited distribution of this report to the public at large, or by DDC to the National Technical Information Service (NTIS).

This technical report has been reviewed and is approved.

ROY A. DeGAUGH, Technical Director
Manpower and Personnel Systems Division

Approved for publication.

HAROLD E. FISCHER, Colonel, USAF
Commander

REPORT DOCUMENTATION PAGE

READ INSTRUCTIONS BEFORE COMPLETING FORM

1. REPORT NUMBER: AFHRL-TR-73-61	2. GOVT ACCESSION NO.
3. RECIPIENT'S CATALOG NUMBER	
4. TITLE (and Subtitle): UNITED STATES AIR FORCE TRAINING LINE SIMULATOR	5. TYPE OF REPORT & PERIOD COVERED: Final
	6. PERFORMING ORG. REPORT NUMBER
7. AUTHOR(s): Franz Nauta, Michael B. Pierce	8. CONTRACT OR GRANT NUMBER(s): F41609-70-C-0047
9. PERFORMING ORGANIZATION NAME AND ADDRESS: Decision Systems Associates, Inc., 11428 Rockville Pike, Rockville, Maryland 20852	10. PROGRAM ELEMENT, PROJECT, TASK AREA & WORK UNIT NUMBERS: 63230210
11. CONTROLLING OFFICE NAME AND ADDRESS: HQ Air Force Human Resources Laboratory, Brooks Air Force Base, Texas	12. REPORT DATE: December 1973 13. NUMBER OF PAGES: 49
14. MONITORING AGENCY NAME & ADDRESS (if different from Controlling Office): Manpower and Personnel Systems Division, Air Force Human Resources Laboratory, Lackland Air Force Base, Texas 78236	15. SECURITY CLASS. (of this report): Unclassified 15a. DECLASSIFICATION/DOWNGRADING SCHEDULE

16. DISTRIBUTION STATEMENT (of this Report)

Approved for public release; distribution unlimited.

17. DISTRIBUTION STATEMENT (of the abstract entered in Block 20, if different from Report)

18. SUPPLEMENTARY NOTES

19. KEY WORDS (Continue on reverse side if necessary and identify by block number)

basic training
basic training attrition
basic training setback
optimal assignment (fill)
simulator
technical training
technical training attrition
technical training setback

20. ABSTRACT (Continue on reverse side if necessary and identify by block number)

This report describes the technical aspects and potential applications of a computer-based model simulating the flow of airmen through basic training and entry-level technical training. For a more detailed description on the use of the Training Line Simulator, refer to AFHRL-TR-72-69, *the Airman Training Line Simulator*. This report gives an extensive description of input control cards and files necessary for an application of the Airman Training Line Simulator Model. The objective of this Training Line Simulator is to assess the impacts of alternative recruit classification and training policies under a wide variety of assumptions regarding the quality of recruits and entry-level training parameters. Parameters accommodated by the model include mandatory course prerequisities, attrition and setback rates, class schedules and quotas, and a host of individual airman attributes. The model

Item 20 (Continued):

evaluates the impacts of training parameter changes by determining the maximum percent fills of training quotas, the size of the waiting lines for technical training courses, student-instructor ratios and the numbers of setbacks, attritions and unassigned basic training graduates.

The Training Line Simulator is an entity simulation model with imbedded optimizations to achieve optimal fill of training quotas. The model employs an asynchroneus as opposed to incremental projection methodology to achieve execution efficiencies.

PREFACE

This work was performed under Project 6323, Personnel Management Research and Development; Task 632302, Research and Development on Mathematical/Econometric Models of the Air Force Personnel System; Work Unit 63230210, Development of an Airman Force Distribution Model.

The development and computer programming of the Airman Training Line Simulator was carried out under the provisions of Contract Number F41609-70-C-0047 by Decision Systems Associates, Incorporated. Dr. Richard S. Hatch was the principal investigator. Mr. Manuel Pina acted as contract monitor for the Manpower and Personnel Systems Division.

CONTENTS

		Page
Brief		1
I.	OVERVIEW OF MODEL	1
	A. Purpose and Scope	1
	B. Simulation Events and Parameters	2
II.	MODEL DESCRIPTION	5
	A. Model Structure	5
	B. Model Input	9
	C. Model Output	16
III.	DISCUSSION OF MAJOR ASPECTS OF THE MODEL	18
	A. Level and Flexibility of Simulation Detail	18
	B. Asynchronous Processing	18
	C. Optimal Assignment of Basic Training Graduates	19
	D. Simulation of Setback and Attrition	20
IV.	MODEL USE	23
	A. Hardware and Software Compatibility	23
	B. Benchmarks	23
V.	OPERATING INSTRUCTIONS	25

Exhibits

1.	Modes of Operation	30
2.	MACRO Flow Chart	31
3.	Internal Data Files	32
4.	Input-Output Relationships	33
5.	Input Deck Set-Up	34
6.	System Diagnostics	35
7.	Sample Recruit Data Record and Corresponding Definition Card	38
8.	CDC 6600 Hollerith Codes	40
9.	Parameter Card Listings	42
10.	Prerequisite Dictionary List	43
11.	Sample Summary Reports	44
12.	Sample Detailed Reports	45
Form 1473		46

I. OVERVIEW OF MODEL

A. Purpose and Scope

The Training Line Simulator (TLS model) is an analytical tool designed to help manage the entry-level training line. Its primary use is that of gaming -- an analytical procedure used here to assess the relative impacts of parameter changes under various assumptions regarding the quantity and quality of recruits. The model simulates the flow of airmen from entry into the Air Force into basic training through graduation from entry-level technical training. The accession flow is totally controlled by the model user: TLS accepts recruit data records generated externally to the model -- records which describe each trainee via a host of individual, simulation-relevant characteristics.

Training parameters considered by the model include class schedules, quotas, priorities and class sizes for each course, mandatory course entrance prerequisites, and attrition and setback rates in basic training and technical training. The model evaluates the impacts of changes in these training parameters for a given airman accession flow by projecting the maximum possible fills of training quotas, the number of basic training graduates awaiting technical training, class sizes and student-instructor ratios, the number of technical training graduates, the numbers of setbacks or attritions in basic and technical training, and the numbers of unassigned basic training graduates. These simulation results are reported by course at user specified intervals within the maximum simulation period of five years, whereas summary reports are provided for each week of the simulation.

Like many simulation models, TLS may be used for other purposes than gaming. For example, the projected sizes of the waiting lines may provide an indication of the adequacy or inadequacy of a tentative set of class schedules and course quotas. Thus, if the various training parameters could be reliably estimated, TLS would be most useful for training capacity planning and evaluation. Similarly, the projected outflow of technically trained airmen may help personnel managers in programming the initial

duty assignments of graduates from technical training courses. Exhibit 1 summarizes these potential applications of TLS.

B. Simulation Events and Parameters

A general outline of a simulation model is best presented in terms of its conceptual framework: the entities considered by the model, the attributes associated with each type of entity, the events simulated by the model and the timing routine employed.

The Training Line Simulator processes the following types of entities:

- airmen
- technical training courses
- mandatory prerequisites sets

Entities are defined by their numerical attributes. The following permanent attributes are associated with each entity type:

Airmen:

- accession week
- attrition/setback control score (affecting the individual's probability of attrition or setback in technical training as explained in Section III D)
- one or more continuous variables
- one or more categorical variables
- one or more binary variables

These variables represent the individual's test scores and properties which will determine course entrance qualifications.

Courses:

- prerequisite set identifier (see below)
- class sizes (maximum, minimum and optimum)
- number of instructors available
- schedule of class starting dates in terms of simulation weeks

- course length
- attrition and setback rates by week of training
- allocation fill priority
- schedule of assignment quotas by simulation week

Prerequisite Sets:

- logical operators (AND, OR)
- cuts on continuous variables
- comparison tests on categorical variables
- binary variables

Courses and Prerequisite Sets are permanent entities while airmen are temporary entities. Airmen are input at the appropriate time, their temporary attribute (status within the system) is subjected to changes according to some pattern in time, and after a series of changes airmen are discarded. These changes are termed events. TLS accommodates one exogeneous event (a status change directly controlled by the user), and a large number of endogeneous events (changes triggered by the internal operations of the model).

Exogeneous Event:

- entry into basic training (= accession week)

Endogeneous Events:

- attrition or setback in basic training
- graduation from basic training
- classification (assignment to a specific training course)
- posting to a class or waiting line
- attrition or setback in technical training
- graduation from technical training

The timing routine in TLS, governing the sequence of events, if any, has been designed especially for the purpose of obtaining a high degree of efficiency, i.e.,

minimum model execution costs. Even though the model utilizes fixed time increments of one week, the model is not incremental: each individual is simulated over a maximum number of time increments until he is subject to an event which requires delaying further simulation until a future time increment. This concept is explained in Section III B. As a result, at any particular point in time, airmen with the same accession week will be at different points in simulation time. Accordingly, TLS is a fixed time increment, asynchronous, entity simulation model.

II. MODEL DESCRIPTION

A. Model Structure

The major modules of TLS are concerned with the following processes:

- basic training maturation
- determination of course entrance qualifications of all basic training graduates
- optimal assignment of basic training graduates in light of their eligibilities and the given quotas and fill priorities for each course
- technical training maturation.

Additional functions which must be performed include the processing of input data, the maintenance of various internal data files, and the generation of reports. Exhibit 2 provides an overview of TLS whereas Exhibit 3 reviews the internal data communication needs. The basic simulation logic with respect to the four major functions mentioned above may be best explained by following a recruit data record through the model.

1. Basic Training Processor

The simulation begins by reading a recruit data record from the recruit data tape. Recruit data records are defined at model execution time and contain all assignment-relevant characteristics in addition to date of entry and an attrition control score. Each recruit record is processed, individually, through the Basic Training Processor, which applies specified attrition and setback rates to determine whether or not the recruit will be attrited or set back in basic training and, if so, in what week of training. Attrition and setback actions occur randomly at a rate specified by week of basic training. There are three possible exit modes from the Basic Training Processor:

a. A recruit may be attrited from basic training in a particular week. When this occurs, the Report Generator is notified, training line counters through the last week of training are updated, and the recruit record is dropped from further model consideration.

b. A recruit may be set back in training in a particular week. He is sent to a holding line to await the next basic training class. The Report Generator is notified of the setback action and again the appropriate training line counters are updated. A recruit set back from one basic class is picked up in the next where he repeats the week of training from which he was dropped. Once picked up in the new basic training class, the recruit will graduate with that class.

c. A recruit may be graduated from basic training (this is the normal exit mode). He is then passed on to the Matrix Generator for assignment evaluation.

2. Matrix Generator

A basic training graduate enters the Matrix Generator. It determines his assignment qualifications. Each graduate is tested against the mandatory prerequisites of each training course for which a quota is specified during the week of graduation. A bit matrix of assignment eligibilities is constructed from the qualification test results. Each row of the matrix represents an eligible graduate, and each column a training course and its associated quota. The eligibility matrix is saved for use by the allocator. The pre-assignment maturation process terminates when the recruit data record is output to mass storage to await assignment by the optimal allocation module. Each recruit data record is processed through the Basic Training Processor and the Matrix Generator until all data records for the current date of entry have been processed.

3. Allocator

After pre-assignment maturation processing, the optimal allocation module reads in the assignment eligibility matrix and the appropriate course quota and policy specifications for the basic training graduation week. All basic training graduates available during the given week are assigned at the same time in a single allocation. Efficiency requires that the assignment problem be solved within main storage without access to peripheral storage. The Allocator can assign up to 4000 graduates to up to 125 quotas in a single week. To control the distribution of graduates, fill priority groups may be established in the set of the week's quotas. Eligible graduates are always assigned to high priority quotas in preference to lower priority quotas. If shortages occur among quotas of equal priority, eligible graduates are proportionally shared to the maximum extent possible among the equal priority quotas. It is important to note that the Allocator will always achieve the maximum number of assignments possible regardless of quota priority relationships. Quota priorities affect only the relative distribution of assignments. They never affect the total number of assignments. (For a description of the assignment solution approach, the reader should see Section III C.)

Following each week's assignment, a report is made of the quota fills and the assigned graduates are placed in waiting lines to await a class vacancy in the course to which they were assigned. Graduates who cannot be assigned because they are unqualified or in excess of quotas are reported and dropped from further model consideration.

4. Training Line Processor

Each recruit is placed in a course waiting line (PAT) following the assignment solution. As class vacancies open up recruits are removed from the PAT lines in a first-in, first-out (FIFO) order, i.e., by the week in which they entered the

PAT line (basic graduation week). Within a graduation week, graduates are removed randomly from the PAT line. The period of time an assignee waits in the PAT line is determined by the frequency and size of course quotas and classes, but as long as new classes continue to be opened, no individual can remain in a PAT line indefinitely. Assignees are removed from the PAT line when a class is scheduled to start and there are enough assignees in the line to meet the class minimum size. If the minimum condition is met, the class is filled to capacity, or the PAT line for the course is exhausted. However, if the minimum class size cannot be met, no class is started and no men are removed from the PAT line for that course.

When an assignee is removed from the PAT line, he is sent to the Entry Level Training Processor. The operation of this processor is analogous to the Basic Training Processor. Trainees are attrited, set back or graduated from training. Attrition and setback actions occur randomly according to probabilities computed for each trainee. Computation of attrition and setback probabilities involves the trainee's attrition control score, the attrition control weight, and the weekly rates of attrition for the course to which he is assigned. See Section III D for computation details. Training washouts and graduates are reported and then dropped from further model consideration. Training line counters are updated through the last week of training, and individual data records may be selected for output.

Personnel set back in entry level technical training re-enter training in the next class of their assigned course. The number of weeks a trainee is set back depends on the interval between his original class and the next class offered. If no following class has been started at the time a trainee is set back, he is placed in the PAT line for his assigned course to await the start of the next class.

Once joined to a new class, trainees set back graduate with their new class and are not subject to further setback or attrition.

B. Model Input

TLS requires five types of input data:

- Recruit data, including all assignment-relevant characteristics for each individual.
- Basic training data, including setback and attrition rates.
- Training course data, including mandatory prerequisites for each course and course characteristics such as course length, convening dates, setback and attrition rates.
- Allocation policy specifications, including training quotas and assignment priorities associated with each class for each course.
- System output control data, specifying the reports and data files to be generated.

Recruit data are input via magnetic tape, via the Recruit Data Record File. All other data are input via standard keypunch cards, organized into four control card decks:

- a run parameters deck
- a basic training deck
- a training course prerequisites deck
- a training course deck.

Each deck contains logically related parameters pertaining to specific functions of the simulation model.

The data specified on the training course prerequisites deck is automatically transferred to a Prerequisite Dictionary File, a file generated and maintained by the system and stored on magnetic tape. Consequently, if no changes in the

course prerequisite sets are necessary, the TLS user can dispense with this card deck and use instead the Prerequisite Dictionary File generated in a previous run. If changes are necessary, only the prerequisite sets to be modified, added or deleted must be specified by control cards, whereupon TLS will automatically update the current Prerequisite File. This feature is provided for user convenience as well as system efficiency. It minimizes input data volume and key punch errors and increases system execution speed.

A brief outline of the input data and their use is given below. Exhibit 4 illustrates the relationships between input data and simulation results.

1. Recruit Data Records

Because a primary use of the Airman Training Line Simulator is gaming with the training line under variations in recruit quality, an important model consideration is the specification of recruit data. A general, rather than fixed, specification is desirable in order to provide the widest possible range of gaming applications. Recruit Data Records are stored on a BCD tape or on disk in a format analogous to BCD. The Recruit Data Record format and content are defined at model execution time by means of the Recruit Data Record Definition Card (see Run Parameter Deck and Exhibit 7) within the limitations indicated below.

Each Recruit Data Record consists of five data items: (1) an alphanumeric identifier; (2) an integer, 3-digit, entry date; (3) a set of integer continuous variables; (4) a set of alphanumeric categorical variables; and (5) a set of binary variables. The data items in each record must occur in the order specified above. The spacing between items and the exact number of variables are defined at execution time by the Recruit Data Record Definition Card. Although the sets of continuous, categorical, and binary variables may each contain up to 99 variables, the total record length is limited to 300 characters.

Scaling for the continuous variables should be such that the lowest value corresponds to the minimum quantity of the attribute in question. A zero value in a continuous variable indicates that the value is missing. The first continuous variable in the data record is used as the attrition and setback control score, a non-negative factor which is designed to transform course attrition and setback rates into individual attrition and setback probabilities.

Binary variables in the Recruit Data Record are represented by a single one (1) or zero (0) digit, with the value one (1) always representing the true or desirable value of the variable.

2. Run Parameters Deck

The Run Parameters (RP) Deck consists of five card types which specify basic parameters applicable to the simulation run.

DECK 1: RUN PARAMETERS DECK

Card type	Name	Description of parameters
10	Run Parameter Deck Card	Length of simulation run
11	Run Identification Card	Run identification for report headings
12	Recruit Data Record Definition Card	Recruit Data Record definition
13	Report Selection Control Card	Output selection and scheduling
14	Attrition Control Score Weight Card	Attrition/setback score weight

The length of the simulation run is defined by the last simulation week in which technical training courses will be started and must be less than 255 weeks. The recruit data record definition card defines the length, format and content of the recruit data records in standard FORTRAN convention. For an example, see Exhibit 7.

The output selection control card indicates for which simulation intervals the optional, detailed reports must be produced. In addition, it controls the output of airmen records onto the Extract File.

The purpose of the attrition/setback control score weight is explained in Section III, D.

3. Basic Training Parameters Deck

The Basic Training Parameters (BTP) Deck includes three different card types specifying the following parameters: (1) the length of basic training, (2) the schedule of attrition rates, and (3) the schedule of setback rates to be used during the simulation run.

DECK 2: BASIC TRAINING PARAMETERS DECK

Card type	Name	Description of parameters
20	Basic Training Deck Card	Length of basic training
21	Basic Training Attrition Rate Schedule Card	Basic training attrition rates
22	Basic Training Setback Rate Schedule Card	Basic training setback rates

Basic training attrition and setback rates are necessary to simulate in a Monte Carlo fashion attritions from and setbacks in basic training. Different rates may be specified for each week of basic training if so desired. Different sets of rates may be specified for different periods of the simulation. The given rates determine the average number of attritions and setbacks. Recruits can be set back only once, and, if set back, will graduate with the next class. Recruits which are set back cannot subsequently be attrited.

4. Entry Level Training Prerequisites Deck

The Entry Level Training Prerequisites (ETP) Deck specifies the parameters and logic used to determine the eligibility of basic training graduates for entry level technical training courses.

DECK 3: ENTRY LEVEL TRAINING PREREQUISITES DECK

Card type	Name	Description of parameters
30	Entry Level Training Deck Card	Deck identification
31	Prerequisite Set Identifier/ Continuous Variable Cut Card	Prerequisite set identifier and continuous variable cuts
32	Categorical Variable Prerequisite Card	Categorical variable tests
33	Binary Variable Prerequisite Card	Binary variable tests
34	Categorical OR Test Card	Multiple categorical variables tests.

Mandatory entrance prerequisites for entry level technical training courses are specified as prerequisite sets -- logical strings of tests on the continuous, categorical and/or binary variables in the Recruit Data Record. The specification of prerequisite sets involves the definition of tests to be performed on the variables contained on the Recruit Data Record, and the definition of the ways in which the results of such tests are to be combined to determine assignment eligibility. In accordance with the three different types of variables, the control cards allow three different types of tests to be applied to the recruit characteristics. The results of the tests for variables of the same type may be "ANDed" or "ORed" together. Within a prerequisite set the component continuous, categorical and binary tests are ANDed together to determine final eligibility. Up to 512 different prerequisite sets may be independently defined and identified for subsequent use. Any prerequisite set may be referenced by any course during

any week of the simulation run.

Each type of control card refers implicitly to one of the three types of variables (continuous, categorical, and binary) contained in the Recruit Data Record. Each of the variables of the same type is numbered according to its relative position on the Recruit Data Record, i.e., the continuous variables are numbered from 1 to I, the categorical variables from 1 to J, and the binary variables from 1 to K, in the order of their occurrence. When specifying tests to be made on the data variables, a specific variable is identified by its relative position number, while the type of variable involved is determined implicitly by the prerequisite card type identifier.

Once the ETP Deck has been specified, training prerequisite logic may be permanently stored on tape and used on subsequent model runs. The tape file is referred to as the Prerequisite Dictionary.

If no ETP Deck is input to the model, an old prerequisite dictionary must be available. If no prerequisite dictionary is input to the model, a prerequisite dictionary is created from the ETP Deck. If both an ETP Deck and prerequisite dictionary are input to the model, an update operation is performed prior to model execution and a new prerequisite dictionary will be generated. If only the Entry Level Training Deck Card (card type 30) appears (with no type 31 through 34 cards), the current prerequisite dictionary is listed.

5. Training Course Input Deck

Each entry level technical training course to be simulated in the model requires user specification of course characteristics, training statistics and allocation policy. These data are specified for all entry level technical training courses by means of the Training Course Input (TCI) Deck. Course characteristics data include course identification, mandatory prerequisite identifier, class

convening dates, course length, etc. Allocation policy is specified in terms of a schedule of course quotas and priorities. Training statistics are specified in terms of attrition and setback rates by week of training.

DECK 4: TRAINING COURSE INPUT DECK		
Card type	Name	Description of Parameters
40	Course Characteristics Deck Card	Deck identification
41	General Characteristics Card	Course identifier and characteristics
42	Allocation Policy Control Card	Course quotas and priorities
43	Course Attrition Rate Schedule Card	Attrition rates by week of training
44	Course Setback Rate Schedule Card	Setback rates by week of training

The purpose of the General Characteristics Card is to specify for each course all relevant course characteristics except attrition and setback rates. In particular this card references a specific prerequisite set (stored in the Prerequisite Dictionary) establishing the mandatory prerequisites which basic training graduates must meet in order to be eligible for the course. Additional course characteristics required for the simulation include the course length, class convening dates and minimum/maximum class sizes. Furthermore, various data are included solely for reporting purposes, i.e., optimal class size and number of instructors required.

The use of class sizes and class convening dates may be illustrated as follows. If the total number of basic training graduates awaiting training in a specific course (referred to as the course PAT line) is less than the minimum class size, no class will be started even though it was scheduled to start. If the total number in the course PAT line is larger than the minimum class size,

and if a class was scheduled to start, individuals will be moved from the PAT line, on a first-in/first-out basis, and placed into the class until either the PAT line is empty or the maximum class size has been reached.

The optimal class size is used to compute the optimal student/instructor ratio versus the observed student/instructor ratio.

The purpose of the attrition and setback rates is to simulate the corresponding events in technical training. The given rates, when combined with the specified attrition control weight (card type 14) and attrition control scores, establish the expected number of attritions and setbacks. An individual's probability of attrition or setback will differ from the course rates to the extent that it is influenced by his attrition control score and the attrition control weight.

Finally, the purpose of the Allocation Policy Control Card is to specify for each simulation week a quota and an assignment priority for each course. Course quotas by week of simulation are independent of class sizes and class convening dates. The quotas and priorities specified for a particular week, in conjunction with the mandatory course prerequisites, determine the allocation of the recruits graduating from basic training in that week. In general, depending upon the qualitative and quantitative make-up of the basic training graduates population, not all quotas will be filled and some graduates may be left unassigned. Courses with a high priority (i.e., priority one) will tend to receive a 100% fill at the expense of courses with a lower priority. Courses with the same priority will tend to receive an equal percentage fill.

C. Model Output

The model generates a variety of reports and data records, all of which are optional except for three summary reports which are output automatically. These summary reports provide weekly snapshots of the basic training line, the allocation

solution and the entry level technical training line on an aggregate basis. In addition, several operator outputs such as a control card listing, a prerequisite dictionary listing, and system diagnostic messages are produced.

The selection and scheduling of optional reports and other output is specified on report selection control cards. The optional reports, which may be produced for any week of the simulation period, provide detailed information on the allocation solution and the entry level technical training line on a by-course basis.

Optionally, records associated with recruits who graduate, attrit, remain unassigned, or are set back in training during a particular week may be independently selected for reporting purposes for any week of the simulation run. Such records are stored on tape in BCD format.

A second output file which is also optional is the Prerequisite Dictionary (PD). This file contains the prerequisite sets and identifiers derived from card types 31-34 in a binary format. The PD file is essential for efficient use of the simulator. Once generated, it should be used for input purposes, thereby replacing the Entry Level Training Prerequisite Deck. Only to the extent that modifications to the file are required, is it necessary to use the third card deck.

Sample reports are included as Exhibits 11 and 12. The three summary reports are produced on one page of computer print-out; the two detailed reports, if requested for the same simulation week, are also produced on one page of computer print-out. Notice that the summary reports are compiled from the detailed information required for the detailed, optional reports (whether they are printed or not).

III. DISCUSSION OF MAJOR ASPECTS OF THE MODEL

A. Level and Flexibility of Simulation Detail

An important feature of TLS is the total flexibility the user has in specifying recruit data and training course prerequisites. This capability allows the user to tailor the model to his particular problem, eliminating the unused parameters and specifications which would always be present under a fixed data record system. The resulting savings in input data preparation efforts and model execution costs are obvious.

B. Asynchronous Processing

TLS utilizes an asynchronous processing approach. At any particular point in time, recruits with the same date of entry will be at different points in simulation time. Thus, even though the basic simulation time increment is one week, the model is not incremental. (An incremental projection model would iteratively project every entity, i.e., recruit or trainee, one time increment.) The rationale for this basic design concept is based on the objective of system efficiency: asynchronous projection minimizes the number of references to peripheral storage and thereby maximizes processing speed.

This concept may be difficult to visualize. The model user may want to consider the implications in the following way: an individual recruit data record is projected as far as possible each time it is accessed. There are only three barrier points in the model:

(1) Setback in basic training
(2) The Allocator
(3) Setback in entry level technical training.

Barriers (1) and (3) occur when the model determines that a particular recruit is set back in a particular week. He is sent to a holding line to await the start of the next class. Further processing of that record is delayed until the next week or possibly later.

Barrier (2) occurs because the Allocator requires that all basic training graduates of the same week be considered simultaneously. Thus, after graduation from basic training and assignment evaluation (i.e., the evaluation of training course eligibilities by the Matrix Generator), individual records are collected until all recruits graduating from basic training in the same week have been processed. After the assignment solution, processing occurs on a course-by-course basis. Individual recruits are projected either to be attrited (and dropped from further consideration), to be set back (and put in a holding line), or to graduate from entry level technical training.

C. Optimal Assignment of Basic Training Graduates

In a typical assignment problem there is either a shortage of basic training graduates, a shortage of qualified graduates, or both. Importantly, the unused training spaces which result from such shortfalls in trainee quantity or quality must either be shared inequitably among schools of unequal importance in accordance with user specified priorities or shared fairly among schools of equal importance. Furthermore, the distribution of unused training spaces must be such that a maximum utilization of available trainees is made. Thus, the optimal allocation solution must exhibit the following characteristics: (1) a maximum number of trainees must be assigned, (2) optimal adherence to user specified quota priorities must be achieved, and (3) the assignment solution for schools of equal priority must, as nearly as possible given eligibility constraints and integer considerations, provide equal percentage fills of these school quotas.

In summary, on input to TLS, a priority is specified for each school quota. The quotas of schools with high priorities are filled to the maximum extent possible at the expense of school quotas assigned lower priorities. Given a group of schools with

identical priorities, the Allocator will attempt to fair share the available trainees among the quotas. The Allocator optimizes the number of assignments by means of a primal-dual network flow algorithm originally described by L. R. Ford and D. R. Fulkerson.[1]

D. Simulation of Setback and Attrition

The Training Line Simulator matures recruit data records through basic and technical training. There are three possible exits from training courses: graduation, attrition, and setback. Upon graduation, basic trainees enter the allocation modules and technical trainees leave the training line. Upon attrition, all trainees leave the training line. Upon setback, all trainees enter a queue waiting for the next class.

Attrition and setback simulation in basic training is performed in a Monte Carlo fashion in accordance with user specified attrition and setback rates.

Attrition and setback simulation in entry level technical training is slightly more complex, involving computation of individual probabilities for each trainee. The equation forms for attrition and setback simulation are identical and involve both trainee and course dependent variables. The resulting probabilities are setback probabilities if weekly course setback rates are used, or attrition probabilities if weekly course attrition rates are used. These probabilities are computed as follows:

---

[1] Flows in Networks. L. R. Ford, Jr. and D. R. Fulkerson, Princeton University Press, 1962.

Let,

i is a trainee index,

j is the course index of the course to which the trainee is assigned,

k is the week of training index; $k = 1, 2, \ldots, k, \ldots, L$

L is the last week of training in course j,

S_i is the attrition control score; $S_i \geq 0$

W is the attrition control weight (positive, zero or negative),

$R_{k,j}$ is the attrition rate applicable to an individual with an $S_i = 0$. It is also the rate which will be applied to all individuals whenever the weight, W, is zero.

$C_{k,j}$ is the minimum (or maximum if W is negative) cumulative probability of attrition for course j through week k, and $C_{0,j} \cong 0$.

P_i is the probability of attrition for man i.

Then the attrition or setback probability is defined by:

$$P_i = S_i \cdot W + C_{L,j}$$

and

$C_{k,j}$ is defined iteratively by:

$$C_{k,j} = (1 - C_{k-1,j}) \cdot R_{k,j} + C_{k-1,j}; \qquad (k = 1, \ldots, L)$$

Example: $R_{k,j}$ is .01 for all k; $L = 10$; $0 \leq S \leq 100$; $W = -.001$.

ATTRITION CHARACTERISTICS OF COURSE "j"	
Type of individual	Probability of attrition
Highest scoring individual: S= 100	$P_i = (100)(-.001) + .0956 \cong 00$
Average score: $\bar{S} = 50$	$P_i = (50)(-.001) + .0956 = .0456$
Lowest scoring individual: S = 00	$P_i = (00)(-.001) + .0956 = .0956$

Notes:

1. If $C_{L,j} = 0$ (i.e., all $R_{k,j} = 0$), the model will automatically ignore S_i and W and define P_i equal to zero, so that attrition and/or setback may be selectively zeroed for any course.

2. If $W > 0$, it is possible to generate $P_i > 1.0$, in which case attrition or setback will always occur.

3. If W is negative, $R_{k,j}$ should specify the maximum weekly attrition rate, i.e., the rate applied to the individual with the lowest possible attrition control score. If W is positive, $R_{k,j}$ should be specified as the rate to be applied to the lowest S_i where a low S_i receives the lowest probability of attrition. If the attrition control score is conceptualized as positively correlated with intelligence or aptitude, a negative W is required. Average attrition may be estimated by the following formula:

$$\overline{P}_j = \overline{S}_j \cdot W + \sum_{k=1}^{L} R_{k,j}$$

where: $\overline{P}_j$ = mean probability of attrition for all individuals assigned to course j.

$\overline{S}_j$ = mean attrition control score of all individuals assigned to course j.

W = weight (control card 14).

$R_{k,j}$ = attrition rate specified for week k of course j.

If the attrition rate is the same for all weeks, the "estimation" simplifies to:

$$\overline{P}_j = \overline{S}_j \cdot W + LR_j$$

4. If attrition or setback occurs for a trainee, the week in which the event occurred is determined randomly according to the $C_{k,j}$. Specifically, a uniform random number (R) is generated in the interval $0 < R < C_{L,j}$ and the week of attrition is defined as the first k for which $R < C_{k,j}$.

IV. MODEL USE

A. Hardware and Software Compatibility

The design of the Training Line Simulator has been accomplished using the most general capabilities of current computer hardware and software in order to provide a maximum conversion capability. In order to maintain maximum compatibility over a wide range of large scale computer systems, the procedures utilized in TLS were designed, whenever possible, for coding under a FORTRAN compiler capable of compiling USASI Standard FORTRAN Program Units. Furthermore, the design and coding are as machine independent as possible for a complex system of this size. For example, although the CDC 6600 has a 60-bit word size, the model utilizes only 32-bit words for most data storage. Thus, conversion to another machine such as the IBM 360 (with up to four 8-bit bytes per word) would be possible. The minimum characteristics of alternative hardware are as follows:

- 256K bytes of central processor memory (or a total of about 2 million bits)
- five magnetic tape drives
- several million bytes of peripheral, random access memory, dependent upon the accession flow, the number of prerequisite sets used and the length of simulation.

B. Benchmarks

The TLS run time depends primarily on the accession flow, the number of different training courses (with a quota) in each week, and the length of simulation. The time required by the Allocator is a major portion of the run time. Some typical figures are presented below:

Number of courses	Number of airmen allocated	Average solution time for the allocation*
125	4000	45 seconds
125	2000	25 seconds
12	250	0.13 seconds

*On a CDC 6600 computer.

A reliable upper bound on the total model run time is 100 seconds per simulation week, assuming a maximum number of courses and airmen.

V. OPERATING INSTRUCTIONS

Run Submission

The Airman Training Line Simulator (TLS) is currently operating on a Control Data Corporation 6600 computer located in the CDC Data Services, Rockville Cybernet Center, Rockville, Maryland. The program operates under the SCOPE operating system for the CDC 6600 computer. The SCOPE system is a complex operating system which requires specially trained operators, and for this reason users are not allowed direct access to the computer. The functions of tape staging and accounting normally accomplished by the operator on smaller machines are accomplished instead through special SCOPE control cards. The sequence, content and format of the SCOPE control cards required to load and run the Training Line Simulator model are described below in detail in the order in which they must appear in the SCOPE control deck.

The SCOPE control deck precedes all TLS input decks. All SCOPE control cards begin in card column 1 and are punched free field with the various parameters on the cards separated by commas, periods or parentheses. Exhibit 5 illustrates a complete TLS deck structure including the contents of the SCOPE control deck.

1. SEQUENCE CARD

The sequence card is used to identify the job during processing. If a job is submitted to the computer center with an old sequence card, it may be replaced by the center operator for bookkeeping purposes.

Example: $SEQUENCE, nnn.

Where: nnn is an arbitrary three digit alphanumeric identifier.

2. CHARGE CARD

The charge card is used to establish and verify accounting information. The account number is check-summed and verified to insure that it is correct and any error in the format of the charge card or in the account number itself will cause an

immediate termination of the job.

Example: $CHARGE, nnnnnnn-AFT.

Where: nnnnnnn is the account number to which charges accumulated for this job will be billed.

3. THE JOB CARD

The job card is used to establish the basic hardware parameters to be used for the job. The four parameters contained on the card establish:

a. The number of memory words required by the TLS.

b. The number of tape drives to be used by the TLS.

c. The maximum computer time to be used by the TLS.

d. The priority of the job.

The specific priority used determines the speed in which the job is turned around and the price per second charged for computer time.

Example: AFT(CM150000,TPxx,Tyyy,Pz)

Where: xx equals the number of tapes to be used by the job. This number is equal to the number of request cards submitted for the job (see 4 below).

yyy is the maximum allowable running time for the job in octal seconds. A reasonable time limit may be established for the simulation run by multiplying the number of simulation weeks$_8$ to be run times 100_8.

z is a priority code; the following codes are available to TLS:

z = 6 - Express (2 hour)

4 - Standard (4 hour)

2 - Deferred (24 hour)

0 - Economy (weekend).

The given turnaround times are average values -- actual turnaround time depends on the CDC 6600 system load.

4. REQUEST CARD

Request cards are used to assign program logical tape units to physical tape units. Each request card defines a tape drive to be used. There are a maximum of five tape drives that may be required by the Training Line Simulator. A minimum of two tape drives is required, with the remaining three drives being optionally assigned, depending upon the specific inputs and outputs required by the Training Line Simulator run. Each request card and its associated function is listed below:

a. REQUEST,AFT,HI. (xxx)

Where: xxx is the visual reel number of the Training Line Simulator load and go tape.

This request card is always required.

b. REQUEST,TAPE8,HI. (xxx)

Where: xxx is the visual reel number of the tape containing the recruit data records.

This request card is always required.

c. REQUEST,TAPE5,HI. (xxx)

Where: xxx is the visual reel number of an old entry level training prerequisite dictionary.

This request card should be used only if an old dictionary tape is to be input by the Training Line Simulator model.

d. REQUEST,TAPE6,HI. (SAVE)

This request card directs the operator to save a new entry level prerequisite dictionary tape that is to be produced by the Training Line Simulator model. This request card should be used only when the user is creating a new dictionary tape from scratch or is modifying an old dictionary tape.

e. REQUEST, TAPE9, HI. (SAVE)

This request card directs the operator to save the Training Line Simulator extract tape. This request card should be used only when the user has requested the Training Line Simulator to produce extraction records of setbacks, attritions, graduates or unassigned recruits.

5. OTHER SCOPE CARDS

Remaining SCOPE control cards are illustrated in Exhibit 5 exactly as they should be prepared. These cards direct SCOPE to load and execute the Training Line Simulator and to copy any Training Line Simulator reports produced onto the SCOPE output unit (printer).

6. DECK SET-UP

The four Training Line Simulator model control decks are input following the SCOPE control deck as illustrated in Exhibit 5. These decks should be prepared in accordance with the instructions given in AFHRL-TR-72-63. Decks 1, 2 and 4 are required input. Deck 3 (Entry Level Training Prerequisites Deck) is optional if an old Prerequisite Dictionary is input to the model (see Request card, item 4.c. above).

7. TERMINATION OF INPUT

The entire deck should be terminated with a card containing 6, 7, 8, 9 punches in card column 1. If this card is not present, it will be added to the deck by the operator.

Data Listings

1. Card Lists and Diagnostics

All control card inputs, except prerequisite definition control cards, are listed on the output file. Diagnostics of any control card errors are listed immediately following the control card in error. Erroneous prerequisite definition cards and diagnostic messages are listed, but acceptable prerequisite definition control cards are not listed. Instead, a complete listing of the dictionary file is produced whenever a new dictionary is generated. Exhibits of the control card listings are provided in Exhibit 9. All diagnostic messages are listed in Exhibit 6.

2. Prerequisite Dictionary Listing

The prerequisite dictionary listing itemizes the prerequisite tests and variables for each prerequisite identifier on the prerequisite dictionary tape. For each prerequisite identifier a header line is produced containing the set identifier name and the total length (in computer words) of the logic string associated with that identifier. Each function test (e.g., continuous AND, categorical OR, etc.) in the logic string for the prerequisite set is listed offset under the header line. For each function test the total number of variables involved in the test is listed, followed by a detailed breakdown of the variable numbers and test values used by the functions. An exhibit of the prerequisite dictionary listing is provided by Exhibit 10.

Exhibit 1: Modes of Operation

Mode of Operation	Parameters of Interest	Primary Evaluation Criteria*
GAMING	• Recruit Characteristics • Mandatory Course Prerequisites • Attrition/Setback Rates	• Percent fill of training quotas • Extent of lost time due to setbacks • Attrition during training
CAPACITY PLANNING	• Class Schedules • Number of Instructors • Attrition/Setback Rates	• Number in Basic Training • Number in Technical Training • Size of PAT line • Student/Instructor Ratios
PROGRAMMING	• Quantity/Quality of Recruits (procurement plan) • Attrition/Setback Rates • Course Prerequisites	Weekly Schedules of: • Number of ELT Graduates by course • Number of BT Graduates unassigned • Number of ELT Attritions

*
BT = Basic Training
ELT = Entry Level Technical Training
PAT = Personnel Awaiting Training

Exhibit 2: MACRO Flow Chart

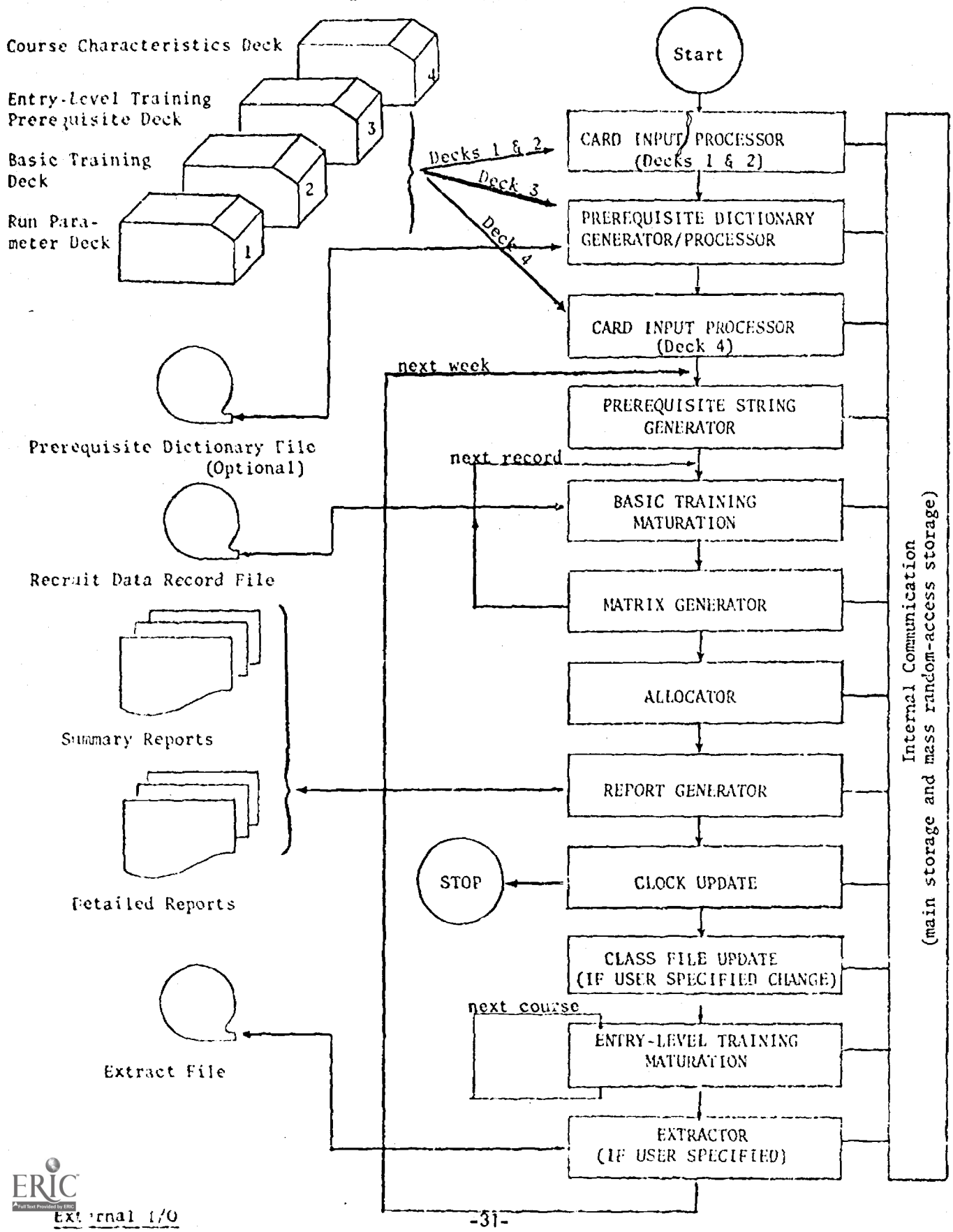

Exhibit 3: Internal Data Files

System Module	Internal File												
	CFA	CFI	PD	PS	MAT	BTS	BTG	BTGP	PAT	ELTS	EXT	RPT	OTH
Card Input Processor (Deck 1 & 2)													0
Prerequisite Dictionary Generator/Processor			I/O										
Card Input Processor (Deck 4)	0	0											
Prerequisite String Generator		I	I	0									
Basic Training Maturation						I/O	0	0			0		I
Matrix Generator				I	0								
Allocator		I			I			I	0		0	0	
Report Generator												I	I
Clock Update	No References												
Class File Update (If User Specified Change)	0	0											I
Entry-Level Training Maturation	I	I							I	I/O	0	0	
Extractor (If User Specified)											I		

LEGEND:

CFA	Class File (Active Part)
CFI	Class File (Inactive Part)
PD	Prerequisite Dictionary
PS	Prerequisite Strings Table
MAT	Assignment Eligibility Matrix
BTS	Basic Training Setbacks File
BTG	Basic Training Graduates Hold File
BTGP	Basic Training Graduates Pointer Records
PAT	Personnel Awaiting Training File
ELTS	Entry-Level Training Setbacks File
EXT	Extract Data File
RPT	Report Data File
OTH	Other Data Files (miscellaneous parameters)

0 - Output from system module referenced.

1 - Input to system module referenced.

Exhibit 11:

INPUT-OUTPUT RELATIONSHIPS

| MODEL INPUTS | | MODEL OUTPUTS | | |

EXHIBIT 5: INPUT DECK SET-UP

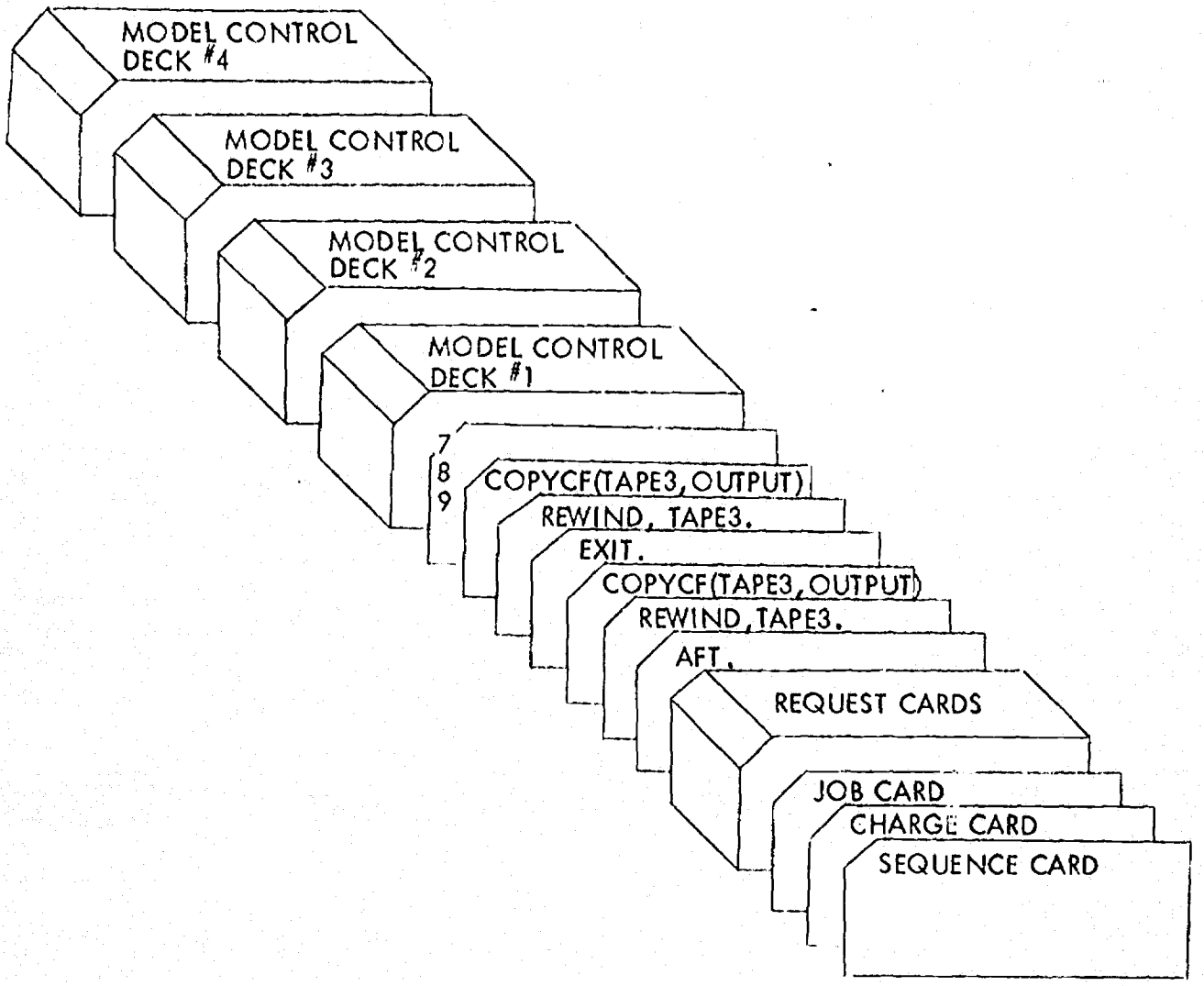

1. NUMBER OF BASIC TRAINING GRADS EXCEEDS USER SPECIFIED MAXIMUM OF XXXX -- JOB ABORT

2. PROCESSING PAST EOF ON DATA TAPE ILLEGAL--JOB ABORTED.

3. LENGTH OF TRAINING NOT IN RANGE 1 TO 20.
   Basic training length is illegal. Job is aborted.

4. UNRECOGNIZED CARD TYPE.
   An illegal card type code has been input.

5. EFFECTIVE DATE NOT IN RANGE 0 TO 254.

6. EFFECTIVE DATE NOT IN SEQUENCE.
   Cards must be sorted by effective date with the earliest card first.

7. ERROR--UNRECOGNIZED COURSE CHARACTERISTICS CARD.
   Card type is not 40 through 44.

8. NUMBER OF PROJECTION WEEKS IS ILLEGAL.
   Projection weeks are not in range $1 \leq x \leq 254$.

9. MULTIPLE RUN IDENTIFICATION CARDS.

10. UNRECOGNIZED RUN CONTROL CARD.
    There is an illegal card type card in deck 1.

11. MULTIPLE RECORD DESCRIPTION CARDS.

12. ATTRITION WEIGHT OUT OF RANGE.

13. MULTIPLE ATTRITION WEIGHT CARDS.

14. NO ATTRITION WEIGHT CARD.

15. NO RUN IDENTIFICATION CARD.

16. ERROR--BLANK COURSE ID.
    Card 41 must contain an alphanumeric course identifier

17. ERROR--NO INITIAL CARD 1.

18. ERROR--FOLLOWING QUOTA CARD IS OUT OF SEQUENCE.

19. ERROR--EFFECTIVE DATE OUT OF SEQUENCE.

20. ERROR--BAD EFFECTIVE DATE.
    Effective date must be $0 \leq x \leq 254$.

21. ERROR--PREREQ. ID NOT DEFINED.

Card 41 must contain an alphanumeric prerequisite identifier.

22. ERROR--IN COURSE LENGTH.

Course length must be $1 \leq x \leq 120$ weeks.

23. ERROR--IN CLASS STARTING DATE.

Class starting date must be (effective date) $\leq x \leq 254$.

24. ERROR--IN CLASS INTERVAL.

Class interval must be $1 \leq x \leq 254$.

25. ERROR--IN MIN CLASS SIZE.

Minimum class size must be $0 \leq x \leq 999$.

26. ERROR--IN OPTIMAL CLASS SIZE.

Optimal class size must be $1 \leq x \leq 999$.

27. ERROR--IN MAX CLASS SIZE.

Maximum class size must be $1 \leq x \leq 999$.

28. ERROR--IN NUMBER OF INSTRUCTORS.

Number of instructors must be $1 \leq x \leq 999$.

29. ERROR--INCOMPLETE DATA ON FIRST CARD 1.

30. ERROR--BAD DATE.

31. ERROR--BAD FIRST APP. WEEK.

First application week on 42 and 43 cards must be $1 \leq x \leq 120$.

32. ERROR--NO QUOTA CARDS FOR COURSE.

33. ERROR-MULTIPLE INPUT FOR COURSE DATA.

34. ERROR--DUP COURSE ID.

35. ERROR--MORE THAN 250 COURSES.

36. ERROR--IN STARTING DATE.

Card 42 starting date is illegal.

37. ERROR--IN INTERVAL.

Card 42 interval is illegal.

38. ERROR--IN QUOTA OR PRIORITY.

39. FATAL ERROR--SET ID HAS LOGIC CONTINUE.

40. FATAL ERROR--MORE THAN 1 EDIT OPERATION ON SET ID 1.

41. FATAL ERROR--DUPLICATE SET ID.

42. NO DICTIONARY DATA SUPPLIED BY THE USER.

43. CFILE ENTRY TOO LARGE FOR BUFFER.
This causes an internal table overflow.

44. MISSING OR ILLEGAL DECK CARD--SKIPPING TO NEXT DECK.

45. DECK DUPPED OR OUT OF SEQUENCE--WILL TRY TO PROCESS.

46. DECK XX IS MISSING.

47. SET XXXXX BOOLEAN XXX VARIABLE XX GREATER THAN NUMBER OF VARIABLES.

48. SET XXXXX CATEGORICAL VARIABLE XX GREATER THAN NUMBER OF VARIABLES.

49. SET XXXXX CONTINUOUS XXX VARIABLE XX GREATER THAN NUMBER OF VARIABLES.

50. BAD RATE SPEC. BEGINNING IN CC.
Card 32 or 33 rate is in error.

51. BAD WEEK SPEC. BEGINNING IN CC.
Card 32 or 33 starting week is in error.

Exhibit 7: Sample Recruit Data Record

and Corresponding Definition Card

A hypothetical data record contains:

a. A 9-digit identification number
b. A 3-digit date of entry
c. Ten 1-digit continuous variables
d. Ten 2-digit continuous variables
e. Five 3-digit continuous variables
f. Five 1-character categorical variables
g. Five 5-character categorical variables
h. Eighty binary variables.
i. Three blank spaces

There are a total of twenty-five continuous variables, fifteen categorical variables, and eighty binary variables, so the PDRD Control Card is:

Card columns	Data	Comments
1-2	12	Card identifier
3	Blank	
4-6	167	Number of characters in the data record
7	Blank	
8-9	09	Number of characters in the record identification
10	Blank	
11-12	25	Number of continuous variables
13	Blank	
14-15	15	Number of categorical variables
16	Blank	
17-18	80	Number of binary variables
19	Blank	
20-23	1011	1-digit continuous variables
24	,	Separator
25-28	1012	2-digit continuous variables
29	,	Separator
30-32	513	3-digit continuous variables
33	,	Separator
34-36	5A1	1-character categorical variables

37	,	Separator
38-39	3X	Blank characters
40	,	Separator
41-43	5A5	5-character categorical variables
44	,	Separator
45-18	8011	Binary variables
49-30	Blank	

Character	Display Code	External BCD	Hollorith Punch Positions
A	01	61	12-1
B	02	62	12-2
C	03	63	12-3
D	04	64	12-4
E	05	65	12-5
F	06	66	12-6
G	07	67	12-7
H	10	70	12-8
I	11	71	12-9
J	12	41	11-1
K	13	42	11-2
L	14	43	11-3
M	15	44	11-4
N	16	45	11-5
O	17	46	11-6
P	20	47	11-7
Q	21	50	11-8
R	22	51	11-9
S	23	22	0-2
T	24	23	0-3
U	25	24	0-4
V	26	25	0-5
W	27	26	0-6
X	30	27	0-7
Y	31	30	0-8
Z	32	31	0-9
0	33	12	0
1	34	01	1

(continued) CDC 6600 HOLLERITH CODES

Character	Display Code	External BCD	Hollerith Punch Punch
2	35	02	2
3	36	03	3
4	37	04	4
5	40	05	5
6	41	06	6
7	42	07	7
8	43	10	8
9	44	11	9
+	45	60	12
-	46	40	11
*	47	54	11-8-4
/	50	21	0-1
(	51	34	0-8-4
)	52	74	12-8-4
$	53	53	11-8-3
=	54	13	8-3
blank	55	20	space
,	56	33	0-8-3
.	57	73	12-8-3
≡	60	36	0-8-6
[	61	17	8-7
]	62	32	0-8-2
:	63	00	8-2
≠	64	14	8-4
→	65	35	0-8-5
∨	66	52	11-0
∧	67	37	0-8-7
↑	70	55	11-8-5
↓	71	56	11-8-6
<	72	72	12-0
>	73	57	11-8-7
≤	74	15	8-5
≥	75	75	12-8-5
¬	76	76	12-8-6

RUN PARAMETER CARDS

```
10  008
11                                  TEST CARD 34
12 080 05 01 03 03 12,3A1,311
13 1 08
14 0
```

BASIC TRAINING PARAMETERS

```
20  08
```

COURSE DATA CARD LIST

```
41 COURSE  1        PSET1       10 9   1   1   20   20 1
42 0010110
41 COURSE  2        PSET2       10 9   1   1   20   20 1
42 0010110
41 COURSE  3        PSET3       10 9   1   1   20   20 1
42 0010110
41 COURSE  4        PSET4       10 9   1   1   20   20 1
42 0010110
41 COURSE  5        PSET5       10 9   1   1   20   20 1
42 0010110
```

TEST CARD 34

PREREQUISITE DICTIONARY LIST

```
SET PSET1       CONTAINS    6 WORDS
        CAT, OR HAS    2 VARIABLES
                1 = A           2 = C
SET PSET2       CONTAINS   13 WORDS
        CONT, AND HAS    1 VARIABLES
                1 =  30
        BIN, AND HAS     1 VARIABLES
                1
        CAT, OR HAS    2 VARIABLES
                3 = A           3 = B
SET PSET3       CONTAINS    9 WORDS
        CONT, AND HAS    1 VARIABLES
                1 =  20
        CAT, VARIABLE NO,    1 HAS    2 TEST VALUES
                D               02E
SET PSET4       CONTAINS   13 WORDS
        CONT, AND HAS    1 VARIABLES
                1 =  30
        BIN, AND HAS     1 VARIABLES
                1
        CAT, OR HAS    2 VARIABLES
                2 = A           3 = D
SET PSET5       CONTAINS    7 WORDS
        CONT, AND HAS    1 VARIABLES
                1 =  20
        BIN, AND HAS     1 VARIABLES
                2
```

U.S. AIR FORCE TRAINING LINE SIMULATOR
DEBUG TEST NO.1 (20000 X 125 X 60)

	BASIC TRAINING SUMMARY				ALLOCATION SUMMARY					ENTRY LEVEL TRAINING SUMMARY			
WEEK	INPUT TO BASIC TNG	TOTAL BASIC TNG	ATTRITION FROM BASIC TNG	AVAILS (BASIC TNG GRADS)	TOTAL TECH TRAINING QUOTAS	TOTAL QUOTAS UNFILLED	PER CENT QUOTA FILL	TOTAL AVAILS ASSIGNED	AVAILS NOT ASSIGNED	PERSONNEL AWAITING TRAINING	STUDENTS IN TECH TRAINING	ATTRITION FROM TECH TRAINING	GRADS
1	4000	[illegible]	35	0	0	0	0.0	0	0	0	0	0	0
2	2000	5965	61	0	0	0	0.0	0	0	0	0	0	0
3	2000	7904	79	0	0	0	0.0	0	0	0	0	0	0
4	2000	9625	112	0	0	0	0.0	0	0	0	0	0	0
5	2000	11723	112	0	0	0	0.0	0	0	0	0	0	0
6	2000	13611	111	0	0	0	0.0	0	0	0	0	0	0
7	2000	15590	143	0	0	0	0.0	0	0	0	0	0	0
8	2000	17357	155	3157	4412	1255	71.6	3157	0	0	0	0	0
9	2000	16645	159	2097	2206	109	95.1	2097	0	58	3099	18	0
10	2000	15749	159	1835	2206	371	83.2	1835	0	0	5236	34	0
11	2000	15735	160	1901	2206	305	86.2	1901	0	0	7037	58	0
12	2000	15734	154	1849	2206	357	83.8	1849	0	0	8880	65	0
13	2000	15731	148	1897	2206	309	86.0	1897	0	0	10664	55	0
14	2000	15696	147	1815	2206	391	82.3	1815	0	0	12506	73	0
15	2000	15724	154	1849	2206	357	83.8	1849	0	0	14248	96	0
16	2000	15741	150	1869	2206	337	84.7	1869	0	0	16001	100	0
17	2000	15722	139	1825	2206	381	82.7	1825	0	0	17770	103	0
18	2000	15758	161	1843	2206	363	83.5	1843	0	0	19492	128	255
19	2000	15734	136	1840	2206	366	83.4	1840	0	0	20952	124	451
20	2000	15778	158	1864	2206	342	84.5	1864	0	0	22207	121	638
21	2000	15786	158	1840	2206	366	83.4	1840	0	0	23312	138	812
22	2000	15758	145	1871	2206	335	84.8	1871	0	0	24202	167	924
23	2000	15742	150	1846	2206	360	83.7	1846	0	0	24952	181	1093
24	0	13736	123	1835	2206	371	83.2	1835	0	0	25554	159	1202
25	0	11778	121	1835	2206	371	83.2	1835	0	0	26028	194	1374
26	0	9822	98	1885	2206	321	85.4	1885	0	0	26295	169	1497
27	0	7839	92	1804	2206	402	81.8	1804	0	0	26514	160	1664
28	0	5943	63	1871	2206	335	84.8	1871	0	0	26494	172	1773
29	0	4005	40	1849	2206	357	83.8	1849	0	0	26420	197	1739
30	0	2120	16	1842	2206	364	83.5	1842	0	0	26334	165	1659

ALLOCATION REPORT — TECHNICAL TRAINING REPORT

TECHNICAL TRAINING COURSE	QUOTA PRIORITY	QUOTA	PER CENT QUOTA FILL	UNFILLED QUOTA	STUDENTS ASSIGNED	PRIOR ASSIGNEES AWAITING TRAINING	STUDENTS IN TRAINING	ATTRITION FROM TRAINING	TRAINING SETBACKS	GRADUATING STUDENTS	OPTIMAL STUDENT-INSTR. RATIO	OBSERVED STUDENT-INSTR. RATIO
COURSE81	1	20	85.0	3	17	0	63	0	0	0	20.0	21.0
COURSE82	1	15	86.7	2	13	0	49	1	0	0	20.0	16.3
COURSE83	1	18	83.3	3	15	0	58	0	0	0	20.0	19.3
COURSE84	1	20	90.0	2	18	0	64	1	0	0	20.0	21.3
COURSE85	1	15	86.7	2	13	0	50	0	0	0	20.0	16.7
COURSE86	1	16	83.3	3	15	0	56	0	0	0	20.0	18.7
COURSE87	1	20	85.0	3	17	0	64	0	2	0	20.0	21.3
COURSE88	1	15	86.7	2	13	0	49	0	0	0	20.0	16.3
COURSE89	1	18	83.3	3	15	0	57	0	0	0	20.0	19.0
COURSE90	1	20	85.0	3	17	0	65	0	0	0	20.0	21.7
COURSE91	1	15	86.7	2	13	0	49	0	0	0	20.0	16.3
COURSE92	1	16	83.3	3	15	0	56	0	0	0	20.0	18.7
COURSE93	1	20	90.0	2	18	0	63	0	0	0	20.0	21.0
COURSE94	1	15	86.7	2	13	0	47	0	0	0	20.0	15.7
COURSE95	1	16	83.3	3	15	0	55	0	1	0	20.0	18.3
COURSE96	1	20	85.0	3	17	0	63	0	0	0	20.0	21.0
COURSE97	1	15	86.7	2	13	0	46	1	0	0	20.0	15.3
COURSE98	1	18	88.9	2	16	0	60	0	0	0	20.0	20.0
COURSE99	1	20	85.0	3	17	0	64	1	0	0	20.0	21.3
COURSE100	1	15	86.7	2	13	0	48	0	0	0	20.0	16.0
COURSE101	1	18	88.9	2	16	0	58	0	0	0	20.0	19.3
COURSE102	1	20	85.0	3	17	0	65	0	0	0	20.0	21.7
COURSE103	1	15	86.7	2	13	0	47	1	0	0	20.0	15.7
COURSE104	1	18	88.9	2	16	0	58	0	0	0	20.0	19.3
COURSE105	1	20	85.0	3	17	0	64	0	1	0	20.0	21.3
COURSE106	1	15	86.7	2	13	0	46	0	0	0	20.0	15.3
COURSE107	1	18	88.9	2	16	0	58	0	0	0	20.0	19.3
COURSE108	1	20	85.0	3	17	0	64	0	0	0	20.0	21.3
COURSE109	1	15	86.7	2	13	0	48	0	0	0	20.0	16.0
COURSE110	1	18	83.3	3	15	0	58	0	0	0	20.0	19.3
COURSE111	1	20	85.0	3	17	0	65	0	0	0	20.0	21.7
COURSE112	1	15	86.7	2	13	0	49	0	0	0	20.0	16.3
COURSE113	1	18	88.9	2	16	0	58	1	0	0	20.0	19.3
COURSE114	1	20	85.0	3	17	0	65	0	1	0	20.0	21.7
COURSE115	1	15	86.7	2	13	0	46	1	0	0	20.0	15.3
COURSE116	1	16	83.3	3	15	0	58	0	1	0	20.0	19.3
COURSE117	1	20	90.0	2	18	0	62	0	0	0	20.0	20.7
COURSE118	1	15	86.7	2	13	0	46	1	0	0	20.0	15.3
COURSE119	1	18	83.3	3	15	0	57	0	0	0	20.0	19.0
COURSE120	1	20	90.0	2	18	0	64	1	1	0	20.0	21.3

Exhibit 12: Sample Detailed Reports